HALIFAX TOWNSHIP SANITARY SEWER EXTENSION PROJECT

FOR

HALIFAX AREA WATER AND SEWER AUTHORITY

HALIFAX TOWNSHIP, DAUPHIN COUNTY, PENNSYLVANIA

AUGUST 2022

CONTRACT 2022-01: GRAVITY SEWERS, FORCE MAINS, AND GRINDER PUMPS
CONTRACT 2022-02: PUMP STATION GENERAL CONSTRUCTION
CONTRACT 2022-03: PUMP STATION ELECTRICAL CONSTRUCTION

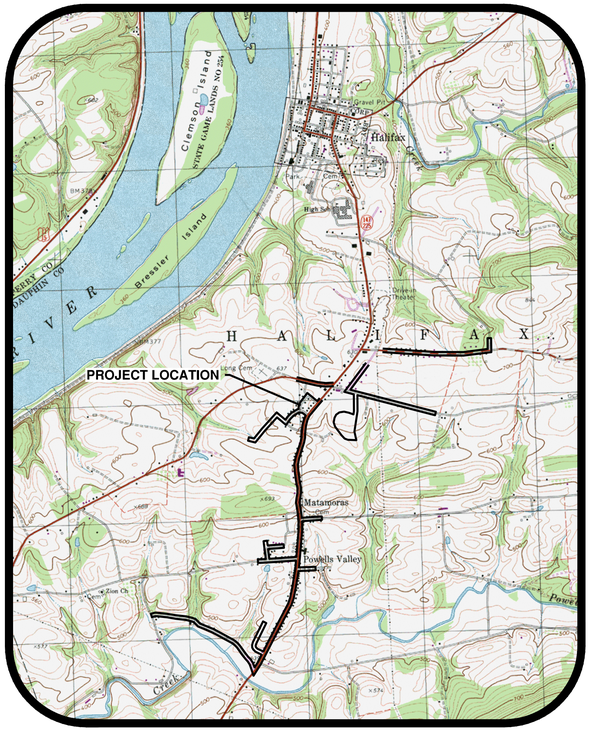

LOCATION MAP
SCALE: 1"=2000'

COMMONWEALTH OF PENNSYLVANIA
REGISTERED PROFESSIONAL
JUSTIN JOHN MENDINSKY
ENGINEER
PE075862
09/01/2022

COMMONWEALTH OF PENNSYLVANIA
REGISTERED PROFESSIONAL
MATTHEW DAVID CICHY
ENGINEER
PE074220
09/01/2022

HRG
Herbert, Rowland & Grubic, Inc.
Engineering & Related Services
AN EMPLOYEE-OWNED COMPANY

369 East Park Drive
Harrisburg, PA 17111
(717) 564-1121
Fax (717) 564-1158
hrg@hrg-inc.com
www.hrg-inc.com

GENERAL NOTES

1. THE AREAS IN WHICH SANITARY SEWERS, LOW PRESSURE SEWERS, FORCE MAINS, GRINDER PUMPS, STRUCTURES AND APPURTENANCES ARE TO BE CONSTRUCTED UNDER THIS CONTRACT MAY CONTAIN EXISTING UNDERGROUND AND ABOVE GROUND UTILITIES AND STRUCTURES WHICH ARE NOT SHOWN ON THESE DRAWINGS. THE DATA PERTAINING TO SIZES, LOCATION AND DEPTH OF EXISTING UTILITIES THAT ARE SHOWN ON THESE DRAWINGS ARE FOR GENERAL INFORMATION AND GUIDANCE ONLY. THE EXACT LOCATION, DEPTH AND SIZE OF EXISTING UNDERGROUND UTILITIES WITHIN THE LIMITS OF THE WORK SHALL BE DETERMINED BY THE CONTRACTOR PRIOR TO CONSTRUCTION IN ACCORDANCE WITH THE CONDITIONS CONTAINED IN THE CONTRACT.
2. THE CONTRACTOR SHALL EXERCISE EXTREME CARE IN EXCAVATION FOR ALL UNDERGROUND PIPELINES AND FACILITIES TO PREVENT ACCIDENTAL DAMAGE TO EXISTING UTILITIES AND ADJACENT BUILDINGS AND STRUCTURES. THE CONTRACTOR SHALL PROTECT AND SUPPORT ALL EXPOSED LINES, OR OTHER FACILITIES AND SHALL SUPPORT AND MAINTAIN THE SAFETY AND STRUCTURAL INTEGRITY OF ADJACENT BUILDINGS AND STRUCTURES WITHIN OR DIRECTLY ADJACENT TO THE RIGHT–OF–WAYS INDICATED. RESTORATION OF DAMAGED BUILDINGS, STRUCTURES, PIPING, CABLES, CONDUITS, WIRING AND APPURTENANCES SHALL BE AT NO COST TO THE OWNERS OF SAID BUILDINGS, STRUCTURES AND UTILITIES, OWNER OR THE ENGINEERS.
3. IN THE EVENT OF DAMAGE TO UTILITIES, BUILDINGS OR STRUCTURES THE CONTRACTOR SHALL IMMEDIATELY NOTIFY THE UTILITY, STRUCTURE OR BUILDING OWNER AND THE ENGINEER, AND BE PREPARED TO IMMEDIATELY MAKE COMPLETE RESTORATION AND REPAIR OF THE DAMAGED FACILITY TO THE SATISFACTION OF THE UTILITY, STRUCTURE OR BUILDING OWNER.
4. THE CONTRACTOR IS NOTIFIED THAT OCCUPATIONAL SAFETY AND HEALTH ACT (OSHA) CLEARANCES MUST BE MAINTAINED TO OVERHEAD POWER LINES FROM ANY CONSTRUCTION EQUIPMENT. THE CONTRACTOR IS RESPONSIBLE FOR MAINTENANCE OF OSHA STANDARDS IN THIS REGARD.
5. OSHA EXCAVATION STANDARDS SHALL APPLY TO THIS CONTRACT. THE CONTRACTOR SHALL BE RESPONSIBLE FOR SAFETY OF TRENCH AND STRUCTURES.
6. ALL PROPOSED GRAVITY SEWER SHALL BE SDR–35 PVC LOW PRESSURE SEWER MAIN AND LATERALS AND CREEK ROAD FORCE MAIN PIPE SHALL BE DR–11 IPS HIGH DENSITY POLYETHYLENE (HDPE); AND LENKER FORCE MAIN AND ROADCAP FORCE FORCE MAIN PIPE SHALL BE DR–11 DIPS HDPE, UNLESS OTHERWISE NOTED ON THE CONTRACT DRAWINGS. REFER TO THE CONTRACT DOCUMENTS FOR PIPE REQUIREMENTS.
7. CONTRACTOR SHALL ENDEAVOR TO MINIMIZE DAMAGE TO EXISTING STRUCTURES, MAILBOXES, GUIDERAILS, SHEDS, TREES, ETC. WHEN SUCH ITEMS CANNOT BE AVOIDED DURING CONSTRUCTION, THE CONTRACTOR SHALL REPAIR OR REPLACE AT NO ADDITIONAL EXPENSE TO OWNER OR ENGINEER. THE MAIL SERVICE SHALL BE MAINTAINED AT ALL TIMES.
8. NO TOPSOIL IS TO BE REMOVED FROM THE SITE. ALL TOPSOIL SHALL BE REPLACED TO THE ORIGINAL OR CONTRACT REQUIRED DEPTH, WHICHEVER IS GREATER. PRIOR TO EXCAVATION, CONTRACTOR TO RECORD AND DOCUMENT DEPTHS EVERY 50 L.F. ALONG PIPE CENTERLINE OUTSIDE OF EXISTING IMPERVIOUS AREAS. CONTRACTOR SHALL FURNISH AND SUPPLY ADDITIONAL TOPSOIL AS REQUIRED TO MEET CONTRACT REQUIRED DEPTH.
9. ALL STRUCTURES, DRIVEWAYS AND DRAINAGE FACILITIES DISTURBED DURING THE WORK SHALL BE REPLACED IN KIND.
10. THE CONTRACTOR SHALL COMPLY WITH ALL APPLICABLE REGULATIONS OF ACT 287 (1974) AS AMENDED.
11. ALL MANHOLES AND CLEANOUT LOCATIONS ARE SUBJECT TO FIELD ADJUSTMENT AS DIRECTED BY THE ENGINEER.
12. THE CONTRACTOR SHALL BE RESPONSIBLE FOR COMPLIANCE WITH ALL APPLICABLE EROSION AND SEDIMENTATION CONTROL REQUIREMENTS OF DEP AND THE DAUPHIN COUNTY CONSERVATION DISTRICT.
13. THE ACTUAL LOCATION AND DEPTHS OF NEW GRAVITY SEWER LATERALS, LOW PRESSURE LATERALS, AND GRINDER PUMPS SHALL BE DETERMINED IN THE FIELD BY THE CONTRACTOR, PROPERTY OWNER, AND OWNER (OR OWNER'S REPRESENTATIVE) BASED ON INFORMATION PROVIDED BY PROPERTY OWNER, AND IS TO BE DOCUMENTED ON THE RECORD DRAWINGS. LATERAL LOCATIONS AND DEPTHS SHOWN ON THE PROFILE ARE FOR DESIGN PURPOSES ONLY. 1
14. LOW PRESSURE SEWER AND FORCE MAIN IS TO BE INSTALLED WITHOUT ANY INTERMEDIATE HIGH POINTS OTHER THAN THOSE SHOWN ON THE PROFILE WITHOUT PRIOR APPROVAL FROM THE ENGINEER. CONTRACTOR SHALL BE RESPONSIBLE TO INSTALL AIR RELEASE VALVES AT INTERMEDIATE HIGH POINTS AS A RESULT OF THEIR WORK WITH NO ADDITIONAL COST TO THE OWNER.
15. THE CONTRACTOR SHALL CONDUCT HIS CONSTRUCTION, MAINTENANCE AND PROTECTION OF TRAFFIC WITHIN PENNDOT RIGHT–OF–WAY UNDER THE HIGHWAY OCCUPANCY PERMIT INCLUDED IN SECTION 00 31 46 OF THE PROJECT MANUAL.
16. THE CONTRACTOR SHALL FIELD VERIFY AND BE RESPONSIBLE FOR ALL DIMENSIONS AT THE PROJECT SITE.
17. UNLESS OTHERWISE INDICATED, ALL FINISHED GRADES SHALL MATCH EXISTING GRADES.
18. FABRICATED (MIN. 5 SEGMENTS) HDPE 90 DEGREE ELBOWS AND LONG RADIUS HDPE SWEEP ELBOWS SHALL BE PERMITTED FOR USE WITH THE HDPE FORCE MAIN PIPING. ALL OTHER 90 DEGREE FITTINGS SHALL NOT BE PERMITTED FOR FORCE MAIN INSTALLATION. 90 DEGREE FITTINGS OTHER THAN THOSE INDICATED ON THE DRAWINGS ARE NOT PERMITTED FOR LOW PRESSURE SEWER INSTALLATION.
19. CONTRACTOR SHALL MAINTAIN A 6 FOOT MINIMUM HORIZONTAL DISTANCE BETWEEN THE SANITARY SEWER PIPE AND UTILITY POLES AND SUPPORT AS REQUIRED.
20. BLASTING SHALL NOT BE PERMITTED. 1
21. PROVIDE A MINIMUM OF 18" VERTICAL SEPARATION WHERE WATER MAINS AND STORM SEWERS CROSS ABOVE SANITARY SEWERS.
22. DIRECTIONAL DRILL PIT LOCATIONS ARE SHOWN FOR HIGHWAY OCCUPANCY PERMITTING PURPOSES ONLY. ACTUAL LOCATIONS ARE TO BE DETERMINED IN THE FIELD BY CONTRACTOR. CONTRACTOR SHALL COORDINATE DIRECTIONAL DRILL PIT LOCATIONS WITHIN PENNDOT RIGHT–OF–WAY WITH PENNDOT INSPECTOR IN CHARGE.
23. LOW PRESSURE LATERALS SHALL BE INSTALLED VIA DIRECTIONAL DRILL WHEN SAID LATERAL CROSSES PENNDOT STATE ROADS.
24. THE CONTRACTOR IS NOTIFIED THAT NOT ALL OF THE WELL AND SEPTIC LOCATIONS ARE SHOWN ON THE CONTRACT DRAWINGS AS NOT ALL FACILITIES COULD BE LOCATED DURING DESIGN. THE CONTRACTOR SHALL BE RESPONSIBLE TO AVOID THE WELL AND SEPTIC SYSTEMS.
25. THE SUBSURFACE UTILITY ENGINEERING QUALITY LEVEL FOR THE ENCLOSED CONTRACT DRAWINGS ARE QUALITY LEVEL C FOR THE WATER AND STORM SEWER UTILITIES; AND QUALITY LEVEL D FOR THE ELECTRICAL AND COMMUNICATIONS UTILITIES. QUALITY LEVELS ARE IN ACCORDANCE WITH THE ASCE STANDARD GUIDELINE FOR THE COLLECTION AND DEPICTION OF EXISTING SUBSURFACE UTILITY DATA. 1
26. DRIVEWAY CULVERTS DAMAGED DURING CONSTRUCTION SHALL BE REPLACED TO MATCH EXISTING SLOPE AND INVERTS. PIPE MATERIAL SHALL BE IN ACCORDANCE WITH SPECIFICATIONS.
27. ALL PROPOSED GRAVITY SEWER MANHOLES ARE 4' INSIDE DIAMETER UNLESS NOTED OTHERWISE.
28. CLAY DIKE SHALL BE INSTALLED 10 FEET UPSTREAM FROM EACH MANHOLE AND WHERE DICTATED BY THE ENGINEER BASED ON FIELD CONDITIONS.
29. LOTS WITH TWO PROPOSED SEWER LATERALS SHOWN SHALL ONLY HAVE ONE SEWER LATERAL INSTALLED. THE LOCATION OF THE INSTALLED SEWER LATERAL SHALL BE DETERMINED BY THE CONTRACTOR AND ENGINEER BASED ON THE LOCATION OF THE EXISTING BUILDING SEWER IN COORDINATION WITH THE PROPERTY OWNER.
30. TWO TRACER WIRES SHALL BE INSTALLED ALONG FORCE MAINS AND LOW PRESSURE SEWERS. TRACER WIRES SHALL BE AFFIXED TO THE PIPING.

HOP GENERAL NOTES

1. THE EXISTING SPEED LIMIT ON SR 0147 IS 40 MPH. THE EXISTING SPEED LIMIT ON SR 0225 IS 40 MPH. THE EXISTING SPEED LIMIT ON SR 4013 IS 40 MPH. THE EXISTING SPEED LIMIT ON SR 4014 IS 40 MPH.
2. THE RIGHT–OF–WAY IS FREE ACCESS.
3. ALL WORK IN PENNDOT RIGHT–OF–WAY IS TO BE PERFORMED CONSISTENT WITH THE FOLLOWING:
   - 3.1 PENNDOT PUBLICATION NO. 13M, HIGHWAY DESIGN MANUAL PART 2 – HIGHWAY DESIGN
   - 3.2 PENNDOT PUBLICATION NO. 34, APPROVED AGGREGATE PRODUCERS (BULLETIN 14)
   - 3.3 PENNDOT PUBLICATION NO. 35, APPROVED CONSTRUCTION MATERIALS (BULLETIN 15)
   - 3.4 PENNDOT PUBLICATION NO. 41, PRODUCERS OF BITUMINOUS MATERIALS (BULLETIN 41)
   - 3.5 PENNDOT PUBLICATION NO. 42, PRODUCERS OF READY–MIX CONCRETE (BULLETIN 42)
   - 3.6 PENNDOT PUBLICATION NO. 46, TRAFFIC ENGINEERING MANUAL
   - 3.7 PENNDOT PUBLICATION NO. 72M, STANDARDS FOR ROADWAY CONSTRUCTION
   - 3.8 PENNDOT PUBLICATION NO. 111, PAVEMENT MARKINGS AND SIGNING STANDARDS
   - 3.9 PENNDOT PUBLICATION NO. 212, OFFICIAL TRAFFIC CONTROL DEVICES
   - 3.10 PENNDOT PUBLICATION NO. 213, TEMPORARY TRAFFIC CONTROL GUIDELINES
   - 3.11 PENNDOT PUBLICATION 408, SPECIFICAIONS
4. DETAILS OTHER THAN THOSE INDICATED ARE ON THE FOLLOWING STANDARD DRAWINGS:
   - 4.1 RC–28M 2/8/2019 (2 SHEETS)
   - 4.2 RC–30M 12/17/2019 (5 SHEETS)
   - 4.3 RC–64M 6/1/2010
5. PENNSYLVANIA STATE RIGHT–OF–WAY MAY NOT BE USED FOR PARKING.
6. MAINTENANCE OF ALL AUTHORIZED SIGNS AND PAVEMENT MARKINGS IS THE RESPONSIBILITY OF THE PERMITTEE.
7. CONTACT PENNSYLVANIA ONE–CALL (1–800–242–1776) THREE WORKING DAYS BEFORE EXCAVATION OR DEMOLITION WORK.
8. IF A TRAFFIC SIGNAL IS WITHIN 500 FT. OF THE SITE, CALL THE DISTRICT TRAFFIC ENGINEER AT LEAST 3 DAYS PRIOR TO THE START OF WORK.
9. THIS PERMIT MAY BE RESTRICTED ON WORKING HOURS AND TIMES FOR HOLIDAYS, WEEKENDS, AND SPECIAL OR UNFORESEEN EVENTS AND WILL REQUIRE APPROVAL FROM THE COUNTY OFFICE TO WORK DURING THESE PERIODS.
10. THE PERMITTEE'S CONTRACTOR SHALL SAWCUT AND REMOVE SHOULDER MATERIAL AS NECESSARY TO ENSURE THE PAVEMENT RESTORATION IS ADJACENT TO THE FULL DEPTH PAVEMENT OF THE TRAVEL LANE.
11. FINAL APPROVAL OF THE PROPOSED SAWCUT LOCATION WILL BE AT THE DISCRETION OF THE INSPECTOR–IN–CHARGE AND WILL BE CONFIRMED AT THE PRE–CONSTRUCTION MEETING IF THE SAWCUT MUST BE LOCATED WITHIN A TRAVEL LANE, IT WILL BE NECESSARY TO MILL AND OVERLAY THE TRAVEL LANE TO PREVENT A WHEEL PATH.
12. THE PROPOSED PAVEMENT SECTION MUST BE AS INDICATED ON THE PLAN, OR MATCH THE EXISTING AS FOUND I THE FIELD, WHICHEVER IS GREATER.
13. PRIOR TO AN OVERLAY, BITUMINOUS OR CONCRETE BASE REPAIR OR JOINT REPLACEMENT MAY BE REQUIRED. REPAIR/REPLACEMENT WILL BE AT THE DISCRETION OF THE INSPECTOR–IN–CHARGE.
14. AL EXISTING PAVEMENT MARKING WHICH ARE NO LONGER APPROPRIATE SHALL BE ERADICATED BY THE PERMITTEE. THE PERMITTEE SHALL PLACE ALL REQUIRED NEW PAVEMENT MARKINGS.
15. ALL PAVEMENT MARKINGS OTHER THAN LONGITUDINAL LINES TO BE HOT THERMOPLASTIC (PENNDOT PUBLICATION 111, TC–8600).
16. MATCH EXISTING PAVEMENT MARKINGS AT THE LIMITS OF WORK.
17. MATERIAL CERTIFICATION MUST BE PROVIDED, BY AN APPROVED MANUFACTURER LISTED IN THE DEPARTMENT'S PUBLICATION 35 (BULLETIN 15), FOR ALL MATERIALS AND STRUCTURES WITHIN PENNDOT RIGHT–OF–WAY.
18. THE PERMITTEE SHALL CONTACT THE COUNTY MAINTENANCE MANAGER AT THE TIME OF THE GUIDERAIL REMOVAL; ALL EXISTING GUIDERAIL TO BE REMOVED SHALL BE TRANSPORTED TO AND STORED AS PER THE DIRECTION FROM THE COUNTY MAINTENANCE MANAGER OR HIS REPRESENTATIVE..
19. ALL PROPOSED PEDESTRIAN FACILITIES REFLECTED ON THESE PLANS, INCLUDING THOSE THAT ARE OUTSIDE OF PENNDOT LEGAL RIGHT–OF–WAY SHALL BE CONSTRUCTED TO COMPLY WITH THE REQUIREMENTS OF THE US ACCESS BOARD, PUBLIC RIGHT–OF–WAY ACCESSIBILITY GUIDELINES (PROWAG) OF THE ACCESSIBILITY, GUIDELINES OF BUILDINGS AND FACILITIES (ADAAG), PENNDOT DESIGN MANUAL, PART 2, CHAPTER 6, AND PENNDOT STANDARDS FOR ROADWAY CONSTRUCTION (PENNDOT PUBLICATION 72M, RC–67M) PROVIDE GUIDANCE ON ADA ACCESSIBLE DESIGN FOR PEDESTRIAN FACILITIES AND CAN BE UTILIZED FOR REFERENCE.
20. ALL SLOPE MEASUREMENTS WILL BE INSPECTED/VERIFIED WITH A 2–FOOT SMART LEVEL.
21. IT IS THE RESPONSIBILITY OF THE PERMITTEE TO REMOVE ANY DEBRIS AND FLUSH OUT ALL EXISTING AND NEW STORM DRAINAGE FACILITIES WITHIN THE PROJECT LIMITS AT THE COMPLETION OF CONSTRUCTION.
22. MODIFICATIONS TO EXISTING DRAINAGE STRUCTURES MAY RESULT IN THE NEED TO REPLACE THE STRUCTURE. REPLACEMENT WILL BE AT THE DISCRETION OF THE INSPECTOR–IN–CHARGE.
23. THE RESPONSIBILITY FOR ENSURING THAT ALL UTILITY POLES WITHIN THE PROPOSED PAVING ARE RELOCATED OUTSIDE OF PAVED AREAS AND SHOULDERS SHALL BE THAT OF THE PERMITTEE. THE UTILITY POLES MUST BE RELOCATED PRIOR TO THE START OF ANY PAVING OPERATIONS.
24. THE PERMITTEE IS RESPONSIBLE FOR THE COORDINATION OF RELOCATING ANY CONFLICTING UTILITIES WHICH ARE A RESULT OF THESE IMPROVEMENTS.
25. ALL UTILITY RELOCATION PERMITS TAKE PRECEDENCE OVER THE UTILITY RELOCATION POSITIONS SHOWN ON THE HOP PLANS.

WORK ZONE (WZTC) NOTES

1. THIS WORK CONSISTS OF THE MAINTENANCE AND PROTECTION OF TRAFFIC AND THE PROTECTION OF THE PUBLIC WHEN APPROACHING AND DEPARTING THE CONSTRUCTION AREA AND WITHIN THE LIMITS OF CONSTRUCTION.
2. FURNISH, ERECT, PLACE AND MAINTAIN TRAFFIC CONTROL SIGNS AND DEVICES. MAINTAIN TRAFFIC DURING HOURS OF CONSTRUCTION AND AT ALL OTHER TIMES CONSISTENT WITH THE METHODS INDICATED ON THESE DRAWINGS AND THE FOLLOWING:
   PENNDOT PUBLICATION 35;
   PENNDOT PUBLICATION 46;
   PENNDOT PUBLICATION 72M;
   PENNDOT PUBLICATION 111;
   PENNDOT PUBLICATION 212;
   PENNDOT PUBLICATION 213;
   PENNDOT PUBLICATION 236;
   PENNDOT PUBLICATION 408; AND
   MUTCD, CURRENT EDITION.
3. REMOVE THESE DEVICES IMMEDIATELY UPON COMPLETION OF THE WORK. PENNDOT WILL REMOVE ANY TRAFFIC CONTROL DEVICES ERECTED BY PENNDOT FORCES.
4. PERMITTEE MUST ARRANGE FOR INSPECTION OF ALL TRAFFIC CONTROL DEVICES PRIOR TO START OF WORK.
5. COVER OR REMOVE ALL CONFLICTING SIGNS AND ERADICATE ALL CONFLICTING PAVEMENT MARKINGS.
6. MOUNT ALL LONG–TERM ADVANCE WARNING SIGNS ON TYPE III BARRICADES UNLESS OTHERWISE NOTED OR INSTRUCTED BY DISTRICT OFFICE.
7. ALL SIGNS AND DEVICES TO BE MAINTAINED IN NEW OR LIKE NEW CONDITION.
8. DRIVEWAYS WILL BE KEPT ACCESSIBLE AT ALL TIMES. LOCATE ALL SIGNS SO THAT SIGHT DISTANCES WILL NOT BE OBSTRUCTED AT DRIVEWAYS AND LOCAL ROADS.
9. ALL CHANNELIZING DEVICES, BARRICADES, AND SIGNS SHALL HAVE TYPE III OR BETTER PRISMATIC RETROREFLECTIVE SHEETING. SHEETING SHALL BE APPROVED AND LISTED IN PENNDOT PUBLICATION 35 (BULLETIN 15).
10. NO TRAFFIC RESTRICTIONS OR LANE CLOSURES ARE PERMITTED BETWEEN 6:00 AM AND 9:00 AM AND BETWEEN 3:00 PM AND 6:00 PM MONDAYS THROUGH FRIDAYS OR ON LEGAL HOLIDAYS AND WEEKENDS ASSOCIATED WITH LEGAL HOLIDAYS. ALL RESTRICTIONS AND CLOSURES ARE TO BE REMOVED BY NOON ON THE DAY PRIOR TO THE LEGAL HOLIDAY.
11. PERMITTEE SHALL NOTIFY LOCAL EMERGENCY AUTHORITIES (E.G., POLICE, FIRE, MEDICAL), AFFECTED BUSINESSES, SCHOOL DISTRICT(S), THE GENERAL PUBLIC, THE DISTRICT PERMIT MANAGER AND THE DISTRICT APRAS COORDINATOR AT LEAST FOURTEEN DAYS PRIOR TO ANY SIGNIFICANT TRAFFIC IMPACTS (E.G., LATERAL WIDTH RESTRICTIONS LESS THAN 16 FEET, DETOURS)
12. MAINTENANCE AND PROTECTION OF TRAFFIC DURING CONSTRUCTION SHALL BE IN ACCORDANCE WITH APPLICABLE PATA DRAWING (S) 101, 102, 103, 104, 106, 107, 109, 202, 203, AND 204 IN THE CURRENT PENNDOT PUBLICATION 213, "TEMPORARY TRAFFIC CONTROL GUIDELINES".
13. DROPOFFS CREATED BY CONSTRUCTION OPERATIONS SHALL BE TREATED CONSISTENT WITH PUBLICATION 408, SECTION 901.3(J).
14. REMOVE ALL SHORT–TERM WORK ZONE TRAFFIC CONTROL SIGNING UPON COMPLETION OF THAT DAY'S WORK PERIOD.
15. RESTRICTING TRAFFIC FLOW WITHIN THE WORK AREA SHALL BE MINIMIZED TO PREVENT TRAFFIC CONGESTION AND UNSAFE TRAFFIC CONDITIONS.
16. NOTIFY THE LOCAL MUNICIPALITY WHERE SIGNALIZED INTERSECTIONS FALL WITHIN THE WORK ZONE. DO NOT FLAG A SIGNALIZED INTERSECTION WITHOUT THE MUNICIPALITY PLACING THE SIGNAL ON FLASH.
17. THE CONTRACTOR SHALL COMPLY WITH ACT 229 OF DECEMBER 2002 DURING CONSTRUCTION ACTIVITIES WITHIN PENNDOT'S RIGHT–OF–WAY.

EXISTING WATER AND GAS UTLITY NOTES

1. GAS MAINS, SERVICES, AND/OR WIRES EXPOSED AS PART OF THE WORK SHALL BE BEDDED WITH A MINIMUM OF 6–INCH OF LIMESTONE DUST/LIMESTONE SAND AROUND THE ENTIRE CIRCUMFERENCE OF THE EXPOSED PIPE AND/OR WIRES, AND THE PLACEMENT OF/REPLACEMENT OF WARNING TAPE IS REQUIRED BEFORE BACKFILLING OCCURS.
2. GAS ANODES EXPOSED AS PART OF THE WORK SHALL BE BEDDED WITH NATIVE DITCH SOILS PLACED AROUND ANODES, AND THE PLACEMENT OF/REPLACEMENT OF WARNING TAPE IS REQUIRED BEFORE BACKFILLING OCCURS.
3. WATER MAINS EXPOSED AS PART OF THE WORK SHALL BE BEDDED WITH AASHTO #8 AGGREGATE 6–INCHES BELOW AND 12–INCHES ABOVE THE EXPOSED PIPE, AND THE PLACEMENT OF/REPLACEMENT OF WARNING TAPE IS REQUIRED BEFORE BACKFILLING OCCURS.
4. WATER SERVICES EXPOSED AS PART OF THE WORK SHALL BE BEDDED WITH TYPE A CEMENT CONCRETE SAND (PENNDOT PUB 408) CONTAINING NO SLAG 6" BELOW AND 18" ABOVE THE EXPOSED SERVICE TUBING, AND THE PLACEMENT OF/REPLACEMENT OF WARNING TAPE IS REQUIRED BEFORE BACKFILLING OCCURS.

SURVEY NOTES

1. SUBJECT PROPERTY LINES ON THIS PLAN HAVE BEEN ESTABLISHED THROUGH FIELD BOUNDARY SURVEY BY HERBERT, ROWLAND AND GRUBIC, INC. ON
2. THIS SURVEY HORIZONTALLY REFERENCES NAD 83, PENNSYLVANIA STATE PLANE COORDINATES, SOUTH ZONE.
3. THE VERTICAL DATUM OF SAID CONTOURS IS BASED ON NAVD 88, GEOID 12A.
4. THE LOCATIONS OF UTILITIES AS SHOWN HEREON ARE BASED ON ABOVEGROUND FEATURES, FIELD OBSERVATIONS\SURVEY, AND RECORD DRAWINGS PROVIDED BY UTILITY COMPANIES. LOCATIONS OF UNDERGROUND UTILITIES/STRUCTURES MAY VARY FROM LOCATIONS SHOWN HEREON. ADDITIONAL BURIED UTILITIES/STRUCTURES MAY BE ENCOUNTERED. NO EXCAVATIONS WERE MADE DURING THE PROGRESS OF THIS SURVEY TO LOCATE BURIED UTILITIES/STRUCTURES. IT SHALL BE THE CONTRACTORS RESPONSIBILITY TO FIELD VERIFY THE EXACT LOCATION AND DEPTH OF ALL UTILITY LINES PRIOR TO THE START OF ANY CONSTRUCTION ACTIVITIES.
5. PRIOR TO THE COMMENCEMENT OF ANY CONSTRUCTION ACTIVITIES, THE CONTRACTOR SHALL CONTACT ALL UTILITY COMPANIES IN COMPLIANCE WITH ACT 287 (AS AMENDED) TO VERIFY THE EXACT LOCATION OF ALL UNDERGROUND UTILITIES. A PA ONE CALL WAS PERFORMED PRIOR TO FIELD SURVEYING.

LEGEND AND ABBREVIATIONS

Symbol	Description
E	Existing Above Ground Electric Line
EU	Existing Underground Electric Line
DBE	Existing Electric – Direct Buried
E,T	Existing Above Ground Electric and Telephone Line
E,CTV	Existing Above Ground Electric and Cable TV Line
E,T,CTV	Existing Above Ground Electric, Telephone and Cable TV Line
	Existing Rail Road Sign
	Existing Rail Road Crossing Gate
	Existing Rail Road Signal Light
	Existing Bollard
	Existing Edge of Gravel
	Existing Guide Rail
X	Existing Fence
	Angle Iron
	Axle
	Drill Hole
	Hub
	Monument
	Nail
	Iron Pipe
	Iron Pin
	PK Nail
	Existing Road Delineation Post
FP	Existing Flag Pole
LP	Existing Lamp Post
PST	Existing Post
MB	Existing Mailbox
T	Existing Above Ground Telephone Line
TU	Existing Underground Telephone Line
DBT	Existing Telephone – Direct Buried
CTV	Existing Above Ground Cable TV Line
CTVU	Existing Underground Cable TV Line
T,CTV	Existing Above Ground Telephone and Cable TV Line
FO	Existing Above Ground Fiber Optic Line
FOU	Existing Underground Fiber Optic Line
C	Existing Conduit
	Existing Cable TV Pedestal
	Existing Telephone Pedestal
Tel. MH	Existing Telephone Manhole
	Existing Telephone Pole
	Existing Electrical Manhole
	Existing Electric Pole
	Existing Private Utility Pole
	Existing Curb
	Existing Edge of Road
	Existing Stone Wall
	Existing Retaining Wall
	Existing Field
	Existing Sign
	Existing Sign And Posts
	Existing One–Sided Billboard
	Existing Two–Sided Billboard
	Existing Fence Post

Symbol	Description
	Existing Guy Pole
	Existing Light Standard
	Existing Guy Wire
E	Existing Electrical Box
	Existing Traffic Signal Pole
	Control Box
12" CMP	Existing Storm Sewer Line
S	Existing Sanitary Sewer Line
San. MH	Existing Sanitary Sewer Manhole
CO	Existing Cleanout
	Existing Septic Tank
	Existing Storm Sewer Inlet
Storm MH	Existing Storm Sewer Manhole
	Probe (passed)
	Probe (failed)
	Perc (passed)
	Perc (failed)
W	Existing Water Line
W	Existing Well
WV	Existing Water Valve
FH	Existing Fire Hydrant
WM	Existing Water Meter
	Existing Water Spigot
	Existing Monitoring Well
W/4"	Existing White Pavement Marking / Width
DY/4"	Existing Double Yellow Pavement Marking / Width
	Rail Road Spike
	Benchmark
	Stone Monument
	Tree Monument
	Railroad Track
	Municipal Boundaries
	Property Line
	Legal Right–of–Way Line
	Setback Line
	Zoning Boundaries
	Existing Easement
	Floodplain
	Floodway
540	Existing Contour Major
	Existing Contour Minor
	Existing Stream Line
x540.3	Existing Ground Elevation
	Existing Ditch Or Swale
	Existing Shrub
	Existing Coniferous Tree
	Existing Deciduous Tree
	Tree/Brush Line
	Shrub Row
	Wetland Flag
	Road Centerline

Symbol / Abbreviation	Description
	PROPOSED SANITARY SEWER EASEMENT/ TEMPORARY CONSTRUCTION EASEMENT
GP	DENOTES STRUCTURE TO BE SERVED BY SIMPLEX GRINDER PUMP
DGP	DENOTES STRUCTURE TO BE SERVED BY DUPLEX GRINDER PUMP
	PROPOSED CLEANOUT / AIR VALVE CHAMBER
ARVM	AIR RELEASE VALVE MANHOLE
BM	BENCHMARK
CI	CAST IRON
CMP	CORRUGATED METAL PIPE
CO	CLEANOUT
CONC.	CONCRETE
CONT.	CONTINUOUS
DIP	DUCTILE IRON PIPE
DMH	DROP MANHOLE
DN.	DOWN
ELEV.	ELEVATION
HDPE	HIGH DENSITY POLYETHYLENE
ICO	IN–LINE CLEANOUT
INV.	INVERT
LPL	LOW PRESSURE LATERAL
LPS	LOW PRESSURE SEWER
MH	MANHOLE
O.C.	OFF CENTER MANHOLE
PVC	POLYVINYL CHLORIDE PIPE
RCP	REINFORCED CONCRETE PIPE
R.O.W.	RIGHT–OF–WAY
SLCPP	SMOOTH LINED CORRUGATED PLASTIC PIPE
STL.	STEEL
TCO	TERMINAL CLEANOUT
TWP	TOWNSHIP
TYP.	TYPICAL
VERT.	VERTICAL
WT	WATERTIGHT FRAME & COVER
	GRAVEL DRIVEWAY PAVEMENT
	MIN–USE DRIVEWAY PAVEMENT
	PAVEMENT OVERLAY
	MILL AND OVERLAY
	PAVED SHOULDER RESTORATION
	PROPOSED SANITARY SEWER MANHOLE
S	PROPOSED SANITARY SEWER MAIN
FM	PROPOSED FORCE MAIN
LP	PROPOSED LOW PRESSURE SEWER
	PROPOSED SANITARY SEWER LATERAL
	PROPOSED LOW PRESSURE LATERAL
	PROPOSED REDUCER
B–1	GEOTECHNICAL BORING LOCATION
TH–1	TEST HOLE LOCATION
CP–#	SITE CONTROL POINT
	PROPOSED CURB STOP/SWING CHECK VALVE FORCE SEWER ASSEMBLY
	PROPOSED SANITARY SEWER CLEANOUT

PA ONE CALL

ACT 287, AS AMENDED

PENNSYLVANIA ACT 287 (1974) AS AMENDED, REQUIRES NOTIFICATION BY EXCAVATORS, DESIGNERS, OR ANY PERSON PREPARING TO DISTURB THE EARTH'S SURFACE ANYWHERE IN THE COMMONWEALTH.

PA ONE–CALL SERIAL NOS.
20222413177
20222413224
20222413719
20222413776
20222413871
20222413955
20222414044
20222414118
20222414161
20222414180
20222414195
20222414232
20222414255
20222420800
20222420878
20222420919
20222421017
20222421218
20222421247
20222421255
20222421269
20222421344
20222421390
20222421417
HAVE BEEN ASSIGNED TO THIS PROJECT ON 08–29–22 AND 08–30–22.

UTILITY LISTING

COMCAST CABLE COMMUNICATIONS INC. (CA)

HALIFAX AREA WATER AND SEWER AUTHORITY (HFX)
–JEFF GROSSER, jgrosser@hawsaonline.com

PPL ELECTRIC UTILITIES CORPORATION (PRD)
–MARK SANTANYANA, mcsantanyana@pplweb.com

VERIZON PENNSYLVANIA LLC (HC)
–DEBRAH BARUM, deborah.d.delia@verizon.com

NO.	REVISION	DATE	BY
1	ADDENDUM NO. 2	10/5/22	RSF

COMMONWEALTH OF PENNSYLVANIA
REGISTERED PROFESSIONAL
MATTHEW DAVID CICHY
ENGINEER
PE074220

HRG
Herbert, Rowland & Grubic, Inc.
Engineering & Related Services
AN EMPLOYEE-OWNED COMPANY

369 East Park Drive
Harrisburg, PA 17111
(717) 564-1121
Fax (717) 564-1158
hrg@hrg-inc.com
www.hrg-inc.com

HALIFAX AREA
WATER AND SEWER AUTHORITY
203 ARMSTRONG STREET
HALIFAX, PA 17032
(717) 896-8083

GENERAL NOTES, LEGEND, ABBREVIATIONS, AND UTILITY LIST FOR HALIFAX TWP. SANITARY SEWER EXTENSION PROJECT

HALIFAX TOWNSHIP DAUPHIN COUNTY PENNSYLVANIA

PROJ. MGR. – JJM	
DESIGN– MDC	
CADD– RSF	
CHECKED–MDC	
SCALE– AS NOTED	
DATE– AUG. 2022	

DRAWING NO. GN

PROJECT 001650.0428

File name: P:\0016\001650_0428\C3D\Plan Sets\SAN\W0016500428-GN.dwg Layout:1 Oct 05, 2022–3:18pm sfocht

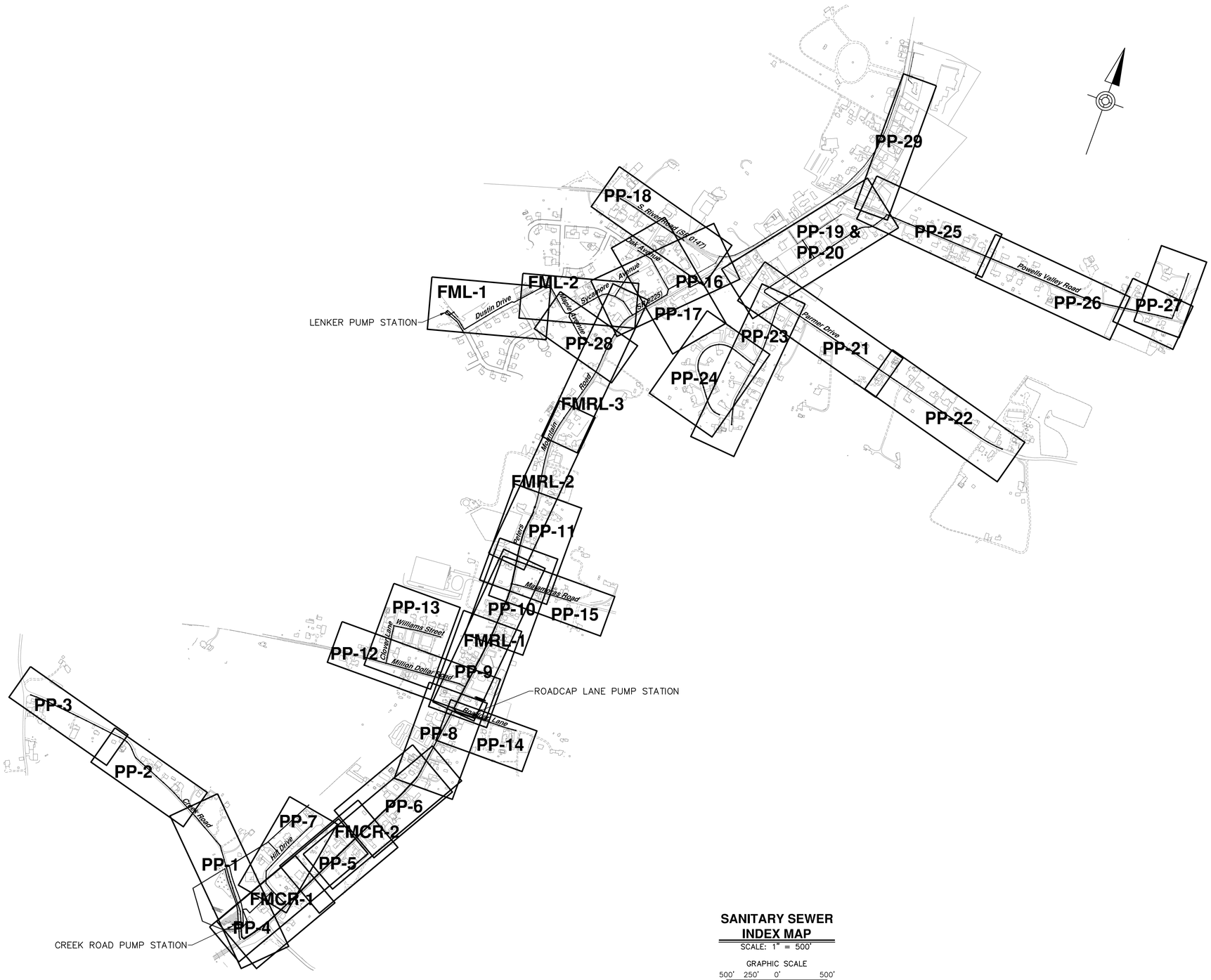

SANITARY SEWER INDEX MAP

SCALE: 1" = 500'

GRAPHIC SCALE

500' 250' 0' 500'

SCALE: 1"=500'

DRAWING LIST

SHEET NO.	DWG. NO.	SHEET TITLE
1.	CV	COVER SHEET
2.	GN	GENERAL NOTES, LEGEND, ABBREVIATIONS, AND UTILITY LIST
3.	IN	SANITARY SEWER INDEX MAP AND DRAWING LIST
4.	PP-1	SANITARY SEWER PLAN AND PROFILE – CREEK ROAD
5.	PP-2	LOW PRESSURE SANITARY SEWER PLAN AND PROFILE – CREEK ROAD
6.	PP-3	LOW PRESSURE SANITARY SEWER PLAN AND PROFILE – CREEK ROAD
7.	PP-4	SANITARY SEWER PLAN AND PROFILE – PETERS MOUNTAIN ROAD
8.	PP-5	SANITARY SEWER PLAN AND PROFILE – PETERS MOUNTAIN ROAD
9.	PP-6	SANITARY SEWER PLAN AND PROFILE – PETERS MOUNTAIN ROAD
10.	PP-7	SANITARY SEWER PLAN AND PROFILE – HILL DRIVE
11.	PP-8	SANITARY SEWER PLAN AND PROFILE – PETERS MOUNTAIN ROAD
12.	PP-9	SANITARY SEWER PLAN AND PROFILE – PETERS MOUNTAIN ROAD
13.	PP-10	SANITARY SEWER PLAN AND PROFILE – PETERS MOUNTAIN ROAD
14.	PP-11	SANITARY SEWER PLAN AND PROFILE – PETERS MOUNTAIN ROAD
15.	PP-12	SANITARY SEWER PLAN AND PROFILE – MILLION DOLLAR ROAD
16.	PP-13	SANITARY SEWER PLAN AND PROFILE – CLOVER LANE AND WILLIAMS STREET
17.	PP-14	LOW PRESSURE SANITARY SEWER PLAN AND PROFILE – ROADCAP LANE
18.	PP-15	LOW PRESSURE SANITARY SEWER PLAN AND PROFILE – MATAMORAS ROAD
19.	PP-16	SANITARY SEWER PLAN AND PROFILE – ELM AVENUE AND SYCAMORE AVENUE
20.	PP-17	SANITARY SEWER PLAN AND PROFILE – OAK AVENUE
21.	PP-18	LOW PRESSURE SANITARY SEWER PLAN AND PROFILE – SOUTH RIVER ROAD (S.R. 147)
22.	PP-19	SANITARY SEWER PLAN AND PROFILE – FELLOWSHIP DRIVE
23.	PP-20	LOW PRESSURE SANITARY SEWER PLAN AND PROFILE – FELLOWSHIP DRIVE
24.	PP-21	LOW PRESSURE SANITARY SEWER PLAN AND PROFILE – PARMER DRIVE
25.	PP-22	LOW PRESSURE SANITARY SEWER PLAN AND PROFILE – PARMER DRIVE
26.	PP-23	LOW PRESSURE SANITARY SEWER PLAN AND PROFILE – GALLI ROAD
27.	PP-24	LOW PRESSURE SANITARY SEWER PLAN AND PROFILE – LAUREN LANE
28.	PP-25	LOW PRESSURE SANITARY SEWER PLAN AND PROFILE – POWELLS VALLEY ROAD
29.	PP-26	LOW PRESSURE SANITARY SEWER PLAN AND PROFILE – POWELLS VALLEY ROAD
30.	PP-27	LOW PRESSURE SANITARY SEWER PLAN AND PROFILE – POWELLS VALLEY ROAD
31.	PP-28	LOW PRESSURE SANITARY SEWER PLAN AND PROFILE – MAPLE AVENUE
32.	PP-29	SANITARY SEWER PLAN AND PROFILE – PETERS MOUNTAIN ROAD
33.	FMCR-1	FORCE MAIN PLAN AND PROFILE – CREEK ROAD PUMP STATION
34.	FMCR-2	FORCE MAIN PLAN AND PROFILE – CREEK ROAD PUMP STATION
35.	FML-1	FORCE MAIN AND GRAVITY SEWER PLAN AND PROFILE – LENKER PUMP STATION
36.	FML-2	FORCE MAIN PLAN AND PROFILE – LENKER PUMP STATION
37.	FMRL-1	FORCE MAIN PLAN AND PROFILE – ROADCAP LANE PUMP STATION
38.	FMRL-2	FORCE MAIN PLAN AND PROFILE – ROADCAP LANE PUMP STATION
39.	FMRL-3	FORCE MAIN PLAN AND PROFILE – ROADCAP LANE PUMP STATION
40.	W-1	CREEK ROAD WATER MAIN EXTENSION
41.	CR-1	CREEK ROAD PUMP STATION – EXISTING CONDITIONS AND DEMOLITION SITE PLAN
42.	CR-2	CREEK ROAD PUMP STATION – EROSION AND SEDIMENTATION CONTROL SITE PLAN
43.	CR-3	CREEK ROAD PUMP STATION – SITE PREPARATION PLAN
44.	CR-4	CREEK ROAD PUMP STATION – SITE GRADING AND SURFACING PLAN
45.	CR-5	CREEK ROAD PUMP STATION – PROPOSED SITE PLAN
46.	CR-6	CREEK ROAD PUMP STATION – PLAN AND SECTIONAL ELEVATION
47.	L-1	LENKER PUMP STATION – EXISTING CONDITIONS AND DEMOLITION SITE PLAN
48.	L-2	LENKER PUMP STATION – EROSION AND SEDIMENTATION CONTROL SITE PLAN
49.	L-3	LENKER PUMP STATION – SITE PREPARATION PLAN
50.	L-4	LENKER PUMP STATION – SITE GRADING AND SURFACING PLAN
51.	L-5	LENKER PUMP STATION – PROPOSED SITE PLAN
52.	L-6	LENKER PUMP STATION – PLAN
53.	L-7	LENKER PUMP STATION – SECTIONS
54.	RL-1	ROADCAP LANE PUMP STATION – EXISTING CONDITIONS AND DEMOLITION SITE PLAN
55.	RL-2	ROADCAP LANE PUMP STATION – EROSION AND SEDIMENTATION CONTROL SITE PLAN
56.	RL-3	ROADCAP LANE PUMP STATION – SITE PREPARATION PLAN
57.	RL-4	ROADCAP LANE PUMP STATION – SITE GRADING AND SURFACING PLAN
58.	RL-5	ROADCAP LANE PUMP STATION – PROPOSED SITE PLAN
59.	RL-6	ROADCAP LANE PUMP STATION – PLAN
60.	RL-7	ROADCAP LANE PUMP STATION – SECTIONS
61.	LS-1	LANDSCAPING PLAN
62.	DT-1	MISCELLANEOUS CONSTRUCTION DETAILS
63.	DT-2	MISCELLANEOUS CONSTRUCTION DETAILS
64.	DT-3	MISCELLANEOUS CONSTRUCTION DETAILS
65.	DT-4	MISCELLANEOUS CONSTRUCTION DETAILS
66.	DT-5	MISCELLANEOUS CONSTRUCTION DETAILS
67.	DT-6	MISCELLANEOUS CONSTRUCTION DETAILS
68.	DT-7	MISCELLANEOUS CONSTRUCTION DETAILS
69.	DT-8	MISCELLANEOUS CONSTRUCTION DETAILS
70.	DT-9	RETAINING WALL DETAILS
71.	DT-10	EROSION AND SEDIMENTATION POLLUTION CONTROL DETAILS
72.	DT-11	EROSION AND SEDIMENTATION POLLUTION CONTROL DETAILS
73.	DT-12	EROSION AND SEDIMENTATION POLLUTION CONTROL NOTES
74.	S-1	LENKER ESTATES AND ROADCAP LANE PUMP STATIONS STRUCTURAL GENERAL NOTES AND CODE INFORMATION
75.	S-2	LENKER ESTATES AND ROADCAP LANE PUMP STATIONS STRUCTURAL DETAILS
76.	S-3	LENKER ESTATES AND ROADCAP LANE PUMP STATIONS STRUCTURAL PLANS
77.	S-4	LENKER ESTATES AND ROADCAP LANE PUMP STATIONS STRUCTURAL ELEVATIONS
78.	S-5	LENKER ESTATES AND ROADCAP LANE PUMP STATIONS STRUCTURAL SECTIONS
79.	S-6	CREEK ROAD PUMP STATION STRUCTURAL DETAILS
80.	A-01	LENKER ESTATES & ROADCAP LANE PUMP STATIONS ARCHITECTURAL PROJECT GENERAL NOTES, SYMBOLS, & ABBREVS
81.	A-02	LENKER ESTATES & ROADCAP LANE PUMP STATIONS ARCHITECTURAL GENERAL – ADA DETAILS
82.	A-03	LENKER ESTATES & ROADCAP LANE PUMP STATIONS LIFE SAFETY PLAN AND CODE ANALYSIS
83.	A-04	LENKER ESTATES & ROADCAP LANE PUMP STATIONS ASSEMBLIES & MISC. DETAILS
84.	A-05	LENKER ESTATES PUMP STATION ARCH. FLOOR PLAN, ROOF PLAN, & RCP
85.	A-06	LENKER ESTATES PUMP STATION EXTERIOR ELEVATIONS & BUILDING SECTIONS
86.	A-07	ROADCAP LANE PUMP STATION ARCH. FLOOR PLAN, ROOF PLAN, & RCP
87.	A-08	ROADCAP LANE PUMP STATION EXTERIOR ELEVATIONS & BUILDING SECTIONS
88.	A-09	LENKER ESTATES & ROADCAP LANE PUMP STATIONS WALL SECTIONS & DETAILS
89.	A-10	LENKER ESTATES & ROADCAP LANE PUMP STATIONS ROOM & DOOR SCHED, DOOR DETAILS, & MISC. DETAILS
90.	H-01	LENKER ESTATES PUMP STATION HVAC FLOOR PLAN, NOTES, SCHEDULES & DETAILS
91.	H-02	ROADCAP LANE PUMP STATION HVAC FLOOR PLAN, NOTES, SCHEDULES & DETAILS
92.	P-01	LENKER ESTATES PUMP STATION PLUMBING FLOOR PLAN, NOTES, SCHEDULES & DETAILS
93.	P-02	ROADCAP LANE PUMP STATION PLUMBING FLOOR PLAN, NOTES, SCHEDULES & DETAILS
94.	E-1	NOTES, ABBREVIATIONS AND SYMBOLS
95.	E-2	CREEK ROAD PUMP STATION SITE PLANS, DETAILS, DUCTBANK SCHEDULE AND SECTIONS
96.	E-3	CREEK ROAD PUMP STATION POWER ONE-LINE DIAGRAM AND SCHEDULE
97.	E-4	CREEK ROAD PUMP STATION CONTROL ONE-LINE DIAGRAMS
98.	E-5	CREEK ROAD PUMP STATION KIOSK PANEL MOUNTING STAND AND DETAILS
99.	E-6	LENKER PUMP STATION SITE PLAN, DUCTBANK SCHEDULE AND SECTIONS
100.	E-7	LENKER PUMP STATION PROPOSED ELECTRICAL PLAN AND DETAIL
101.	E-8	LENKER PUMP STATION POWER ONE-LINE DIAGRAM AND SCHEDULE
102.	E-9	LENKER PUMP STATION CONTROL ONE-LINE DIAGRAMS
103.	E-10	ROADCAP LANE PUMP STATION SITE PLANS, DUCTBANK SCHEDULE AND SECTIONS
104.	E-11	ROADCAP LANE PUMP STATION PROPOSED ELECTRICAL PLAN AND DETAIL
105.	E-12	ROADCAP LANE PUMP STATION POWER ONE-LINE DIAGRAM AND SCHEDULE
106.	E-13	ROADCAP LANE PUMP STATION CONTROL ONE-LINE DIAGRAMS
107.	E-14	STANDARD CONTROL PANELS/DIAGRAMS
108.	E-15	STANDARD DETAILS
109.	E-16	STANDARD DETAILS

NO.	REVISION	DATE	BY

COMMONWEALTH OF PENNSYLVANIA
REGISTERED PROFESSIONAL
MATTHEW DAVID CICHY
ENGINEER
PE074220

HRG
Herbert, Rowland & Grubic, Inc.
Engineering & Related Services
AN EMPLOYEE-OWNED COMPANY
369 East Park Drive
Harrisburg, PA 17111
(717) 564-1121
Fax (717) 564-1158
hrg@hrg-inc.com
www.hrg-inc.com

HALIFAX AREA WATER AND SEWER AUTHORITY
203 ARMSTRONG STREET
HALIFAX, PA 17032
(717) 896-8083

SANITARY SEWER INDEX MAP AND DRAWING LIST FOR HALIFAX TWP. SANITARY SEWER EXTENSION PROJECT
HALIFAX TOWNSHIP DAUPHIN COUNTY PENNSYLVANIA

PROJ. MGR. –	JJM
DESIGN–	MDC
CADD–	BAB
CHECKED–	MDC
SCALE–	AS NOTED
DATE–	AUG. 2022

DRAWING NO. **IN**
SHEET NO. 3 OF 109
PROJECT 001650.0428

File name: P:\2016\001650-2428\1200\Plan Sets\SAN\001650428-IN.dwg Layout:INDEX Sep 02, 2022 - 8:40am akloot

MATCH LINE – SEE DWG. PP-4

MATCH LINE – SEE DWG. PP-2

SANITARY SEWER LATERAL (TYP.)

Creek Road (T-353)

Camp

Peters Mountain Road (SR 0225)

LIMIT OF CONTRACT 2022-01
LIMIT OF CONTRACT 2022-02

PID: 29-024-038 OWNER: JOHN C PETERSON SR

PID: 29-024-050 OWNER: KEITH A BAKER SR

PID: 29-024-051 OWNER: C D GLOVER

PID: 29-024-052 OWNER: BRADLEY L MESSNER

PID: 29-024-027 OWNER: BRADLEY L MESSNER

PID: 29-028-042 OWNER: FAY M KELLY

PID: 29-028-060 OWNER: JOSEPH R MEHERCHOK SR

PID: 29-028-061 OWNER: RAY W & JUDY A MATTER

PID: 29-028-062 OWNER: RAY W & JUDY A MATTER

N/F Foy M. Kelly and Brad L. Messner
Deed Book 3788 Page 87
Lot 1 of Clover Hills
Book "W" Volume 2 Page 87
Parcel ID No. 29-028-042

NOTES:

1. LIMIT OF CONTRACT IS TO IDENTIFY DEMARCATION OF GRAVITY SEWER INSTALLATION ONLY BETWEEN MH-30 AND THE WET WELL. CONTRACT 2022-02 IS RESPONSIBLE FOR PUMP STATION IMPROVEMENTS IN ACCORDANCE WITH OTHER DRAWINGS AND CONTRACT REQUIREMENTS.
2. PUMP STATION PAVEMENT TO BE COMPLETED BY CONTRACT 2022-02.

HORIZ: 50' 25' 0' 50'
VERT: 5' 2.5' 0' 5'
SCALE IN FEET

MH-36 (POLYMER, VENTED MH COVER WITH ODOR CONROL)
STA. 15+79.99
RIM 436.38
INV. IN 429.10 (ICO-14)
INV. OUT 428.60

MH-35 (POLYMER)
STA. 13+54.62
RIM 433.14
INV. IN 425.48 (MH-36)
INV. OUT 425.28

MH-34 (51" INTERIOR DROP POLYMER, VENTED MH COVER WITH ODOR CONROL)
STA. 8+69.55
RIM 427.26
INV. IN 421.43 (MH-35)
INV. OUT 415.38

MH-33
STA. 4+96.33
RIM 420.80
INV. IN 412.62 (MH-34)
INV. OUT 412.42

MH-32
STA. 1+85.41
RIM 419.24
INV. IN 410.87 (MH-33)
INV. OUT 410.77

MH-31
STA. 0+63.90
RIM 418.58
INV. IN 409.92 (MH-32)
INV. OUT 409.82

MH-30
STA. 0+27.86
RIM 418.31
INV. IN 409.46 (MH-31)
INV. OUT 409.26

WW-1
STA. 0+00.00
RIM 418.25
INV. IN 408.94

29-024-038 — 311 LF 8" PVC @ 1.00%

29-024-050

29-024-051 — CLAY DIKE (TYP.) — 385 LF 8" PVC @ 1.00%

29-024-052

48" SLCPP

29-024-027 — 373 LF 8" PVC @ 0.74%

29-028-060 CREEK RD

29-028-061 CREEK RD — 311 LF 8" PVC @ 0.50%

29-028-007 CREEK RD — 131 LF 8" PVC @ 0.65%

5 LF DOWNSTREAM OF MH-30 LIMIT OF CONTRACT 2022-01. CONTRACT 2022-02 IS RESPONSIBLE TO CONNECT SANITARY SEWER MAIN PIPE TO WET WELL.

PROPOSED GRADE — 6" DI WATER MAIN — 3" HDPE — 37 LF 8" PVC @ 1.00%

32 LF 8" DI @ 1.00%

Existing Grade

(S-3.01)

437.4	438.4	438.1	436.5	435.0	433.8	432.8	432.0	431.3	430.9	430.3	429.8	429.2	428.1	426.2	424.2	423.0	422.3	421.8	420.9	420.8	420.7	420.4	420.4	420.0	419.6	419.4	419.2	418.8	418.5	418.7	414.3

16+00 15+00 14+00 13+00 12+00 11+00 10+00 9+00 8+00 7+00 6+00 5+00 4+00 3+00 2+00 1+00 0+00 – 0+25

NO.	REVISION	DATE	BY
1	ADDENDUM NO. 2	10/5/22	RSF

COMMONWEALTH OF PENNSYLVANIA
REGISTERED PROFESSIONAL ENGINEER
MATTHEW DAVID CICHY
PE074220

HRG
Herbert, Rowland & Grubic, Inc.
Engineering & Related Services
AN EMPLOYEE-OWNED COMPANY

369 East Park Drive
Harrisburg, PA 17111
(717) 564-1121
Fax (717) 564-1158
hrg@hrg-inc.com
www.hrg-inc.com

HALIFAX AREA WATER AND SEWER AUTHORITY
203 ARMSTRONG STREET
HALIFAX, PA 17032
(717) 896-8083

SANITARY SEWER PLAN AND PROFILE
CREEK ROAD
FOR
HALIFAX TWP. SANITARY SEWER EXTENSION PROJECT

HALIFAX TOWNSHIP DAUPHIN COUNTY PENNSYLVANIA

PROJ. MGR. –	JJM
DESIGN–	MDC
CADD–	RSF/BAB
CHECKED–	MDC
SCALE–	AS NOTED
DATE–	AUG. 2022

DRAWING NO.
PP-1
SHEET NO.
4 OF 109
PROJECT 001650.0428

File name: P:\2016\001650_SAN\CAD\00000028-PP-01.dwg Layout:CREEK RD 1 (1) (P-PROF) Oct 05, 2022-7:13am stuart

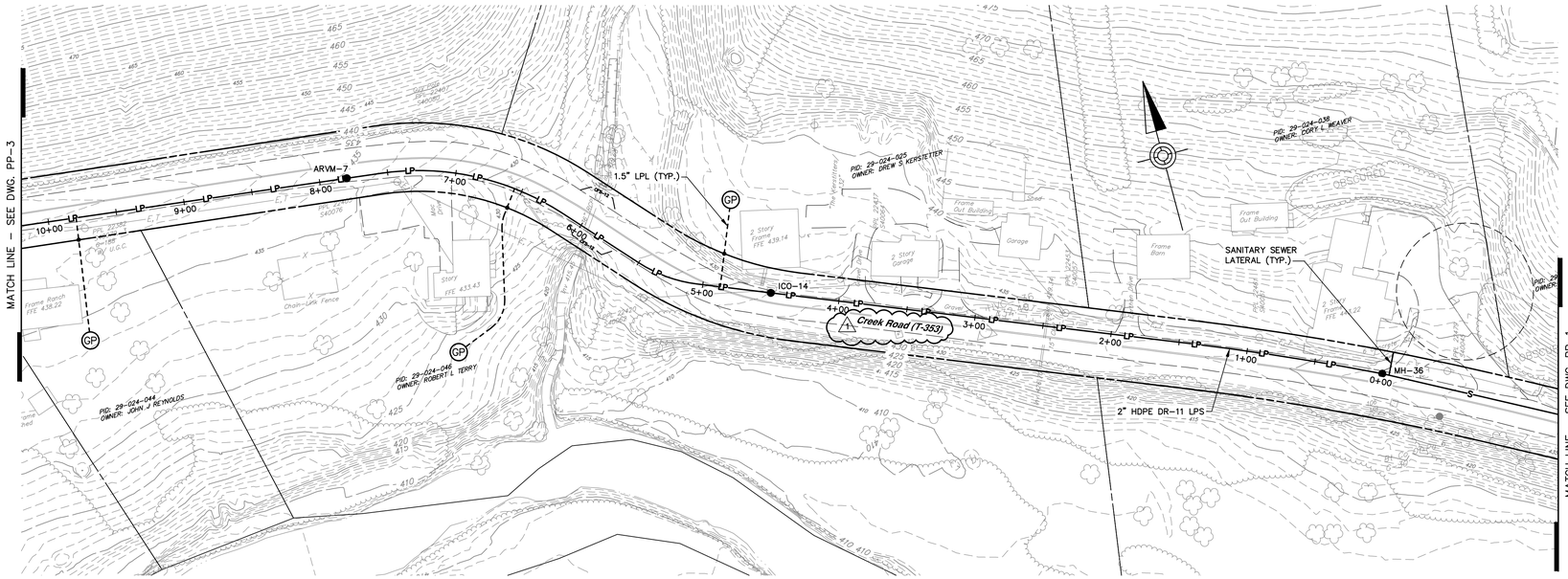

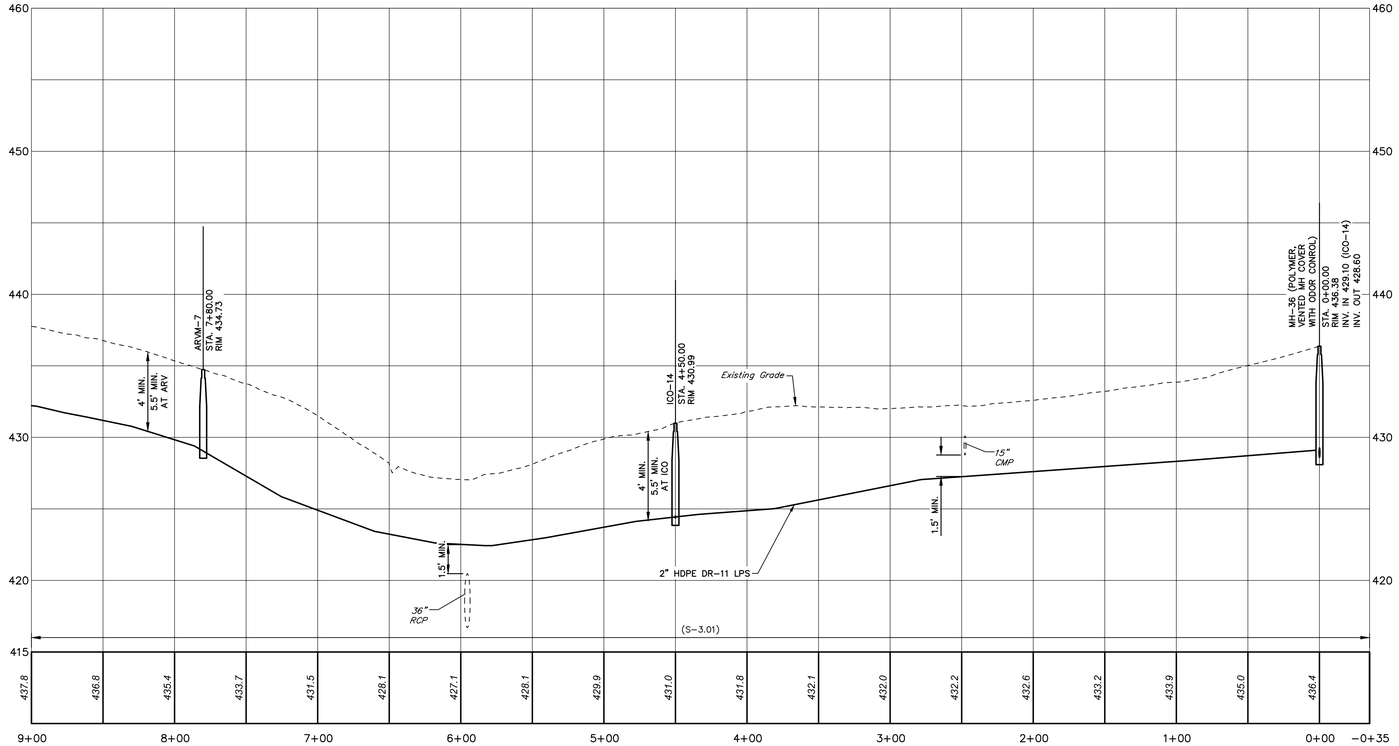

NOTES:
1. ARVM–7 TEE INVERT TO BE LOCATED AT SAME ELEVATION AS 2" LOW PRESSURE SEWER MAIN DISCHARGE ELEVATION.

HORIZ: 50' 25' 0' 50'
VERT: 5' 2.5' 0' 5'
SCALE IN FEET

File name: P:\2001\001650_2018\CAD\PP\Plan Sets\SAN\P001650042B-PP-1P.dwg Layout:CREEK RD 1 Oct 05, 2022 - 4:10pm rhiehl

NO.	REVISION	DATE	BY
1	ADDENDUM NO. 2	10/5/22	RSF

COMMONWEALTH OF PENNSYLVANIA
REGISTERED PROFESSIONAL
MATTHEW DAVID CICHY
ENGINEER
PE074220

HRG
Herbert, Rowland & Grubic, Inc.
Engineering & Related Services
AN EMPLOYEE-OWNED COMPANY
369 East Park Drive
Harrisburg, PA 17111
(717) 564-1121
Fax (717) 564-1158
hrg@hrg-inc.com
www.hrg-inc.com

HALIFAX AREA
WATER AND SEWER AUTHORITY
203 ARMSTRONG STREET
HALIFAX, PA 17032
(717) 896-8083

LOW PRESSURE SANITARY SEWER PLAN AND PROFILE
CREEK ROAD
FOR
HALIFAX TWP. SANITARY SEWER EXTENSION PROJECT

HALIFAX TOWNSHIP DAUPHIN COUNTY PENNSYLVANIA

PROJ. MGR. –	JJM
DESIGN–	MDC
CADD–	RSF/BAB
CHECKED–	MDC
SCALE–	AS NOTED
DATE–	AUG. 2022

DRAWING NO.
PP-2
SHEET NO.
5 OF 109
PROJECT 001650.0428

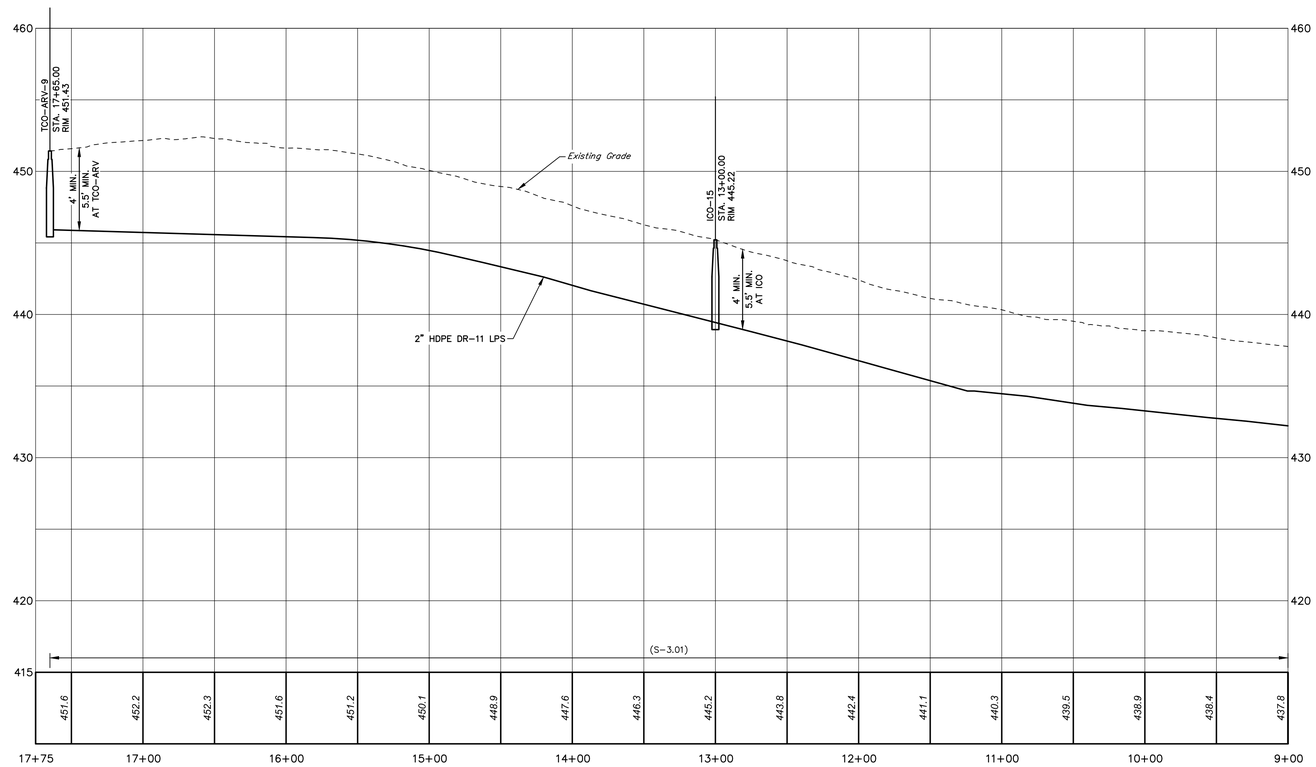

HORIZ: 50' 25' 0' 50'
VERT: 5' 2.5' 0' 5'
SCALE IN FEET

NO.	REVISION	DATE	BY

COMMONWEALTH OF PENNSYLVANIA
REGISTERED PROFESSIONAL
MATTHEW DAVID CICHY
ENGINEER
PE074220

HRG
Herbert, Rowland & Grubic, Inc.
Engineering & Related Services
AN EMPLOYEE-OWNED COMPANY
369 East Park Drive
Harrisburg, PA 17111
(717) 564-1121
Fax (717) 564-1158
hrg@hrg-inc.com
www.hrg-inc.com

HALIFAX AREA
WATER AND SEWER AUTHORITY
203 ARMSTRONG STREET
HALIFAX, PA 17032
(717) 896-8083

LOW PRESSURE SANITARY SEWER PLAN AND PROFILE
CREEK ROAD
FOR
HALIFAX TWP. SANITARY SEWER EXTENSION PROJECT
HALIFAX TOWNSHIP DAUPHIN COUNTY PENNSYLVANIA

PROJ. MGR. – JJM	
DESIGN– MDC	
CADD– RSF/BAB	
CHECKED–MDC	
SCALE– AS NOTED	
DATE– AUG. 2022	

DRAWING NO.
PP-3
SHEET NO.
6 OF 109
PROJECT 001650.0428

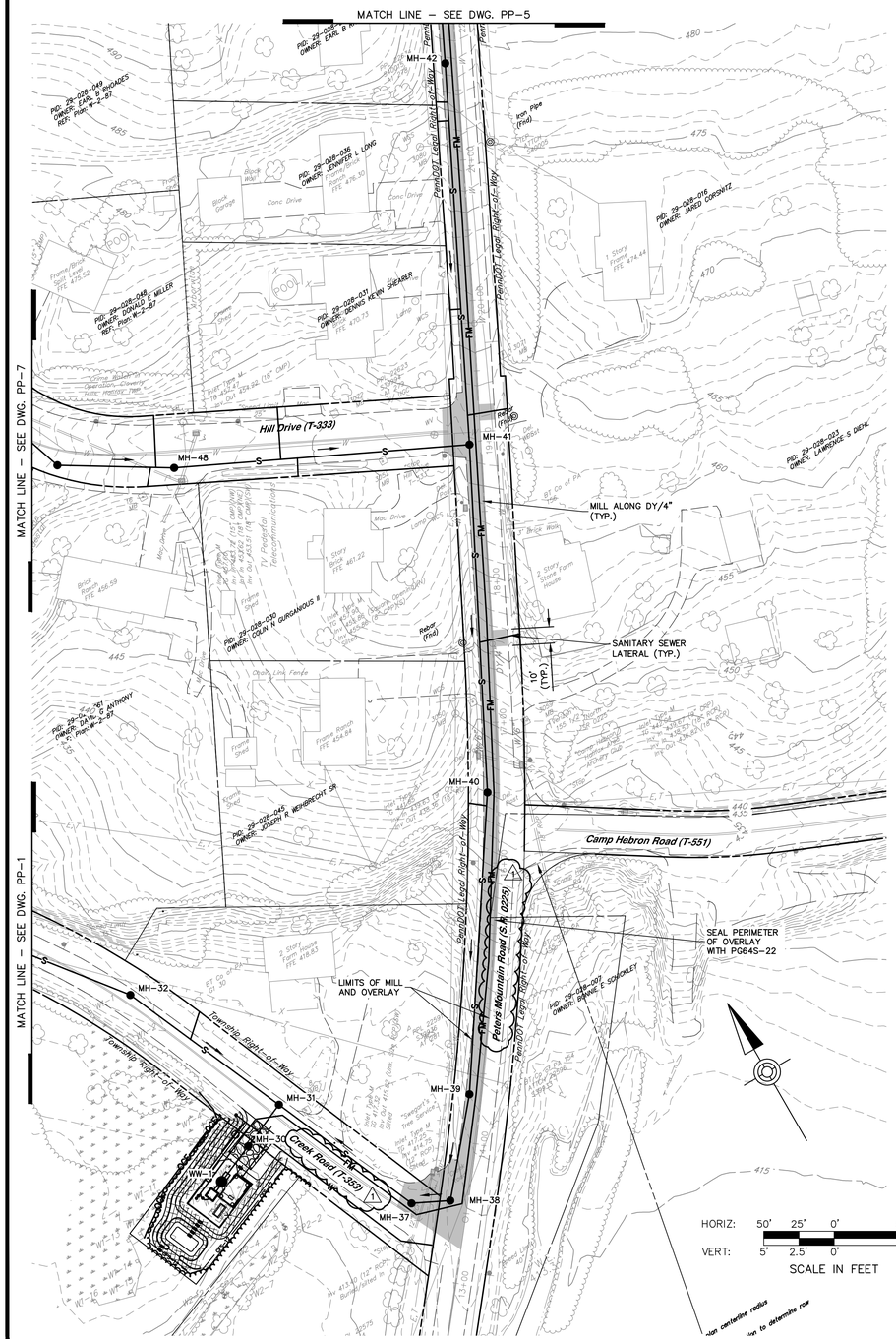

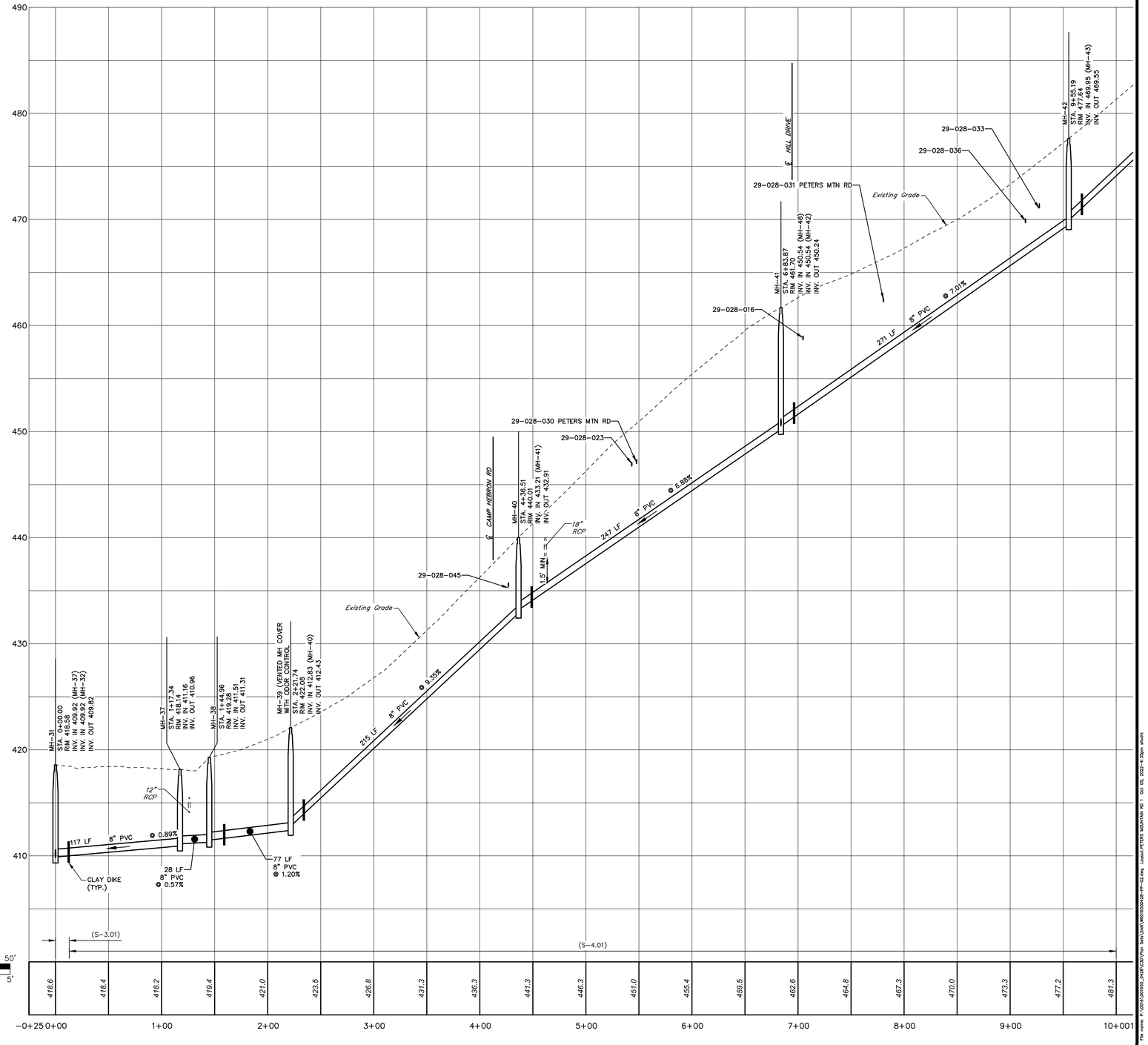

NO.	REVISION	DATE	BY
1	ADDENDUM NO. 2	10/5/22	RSF

COMMONWEALTH OF PENNSYLVANIA
REGISTERED PROFESSIONAL
MATTHEW DAVID CICHY
ENGINEER
PE074220

HRG
Herbert, Rowland & Grubic, Inc.
Engineering & Related Services
AN EMPLOYEE-OWNED COMPANY
369 East Park Drive
Harrisburg, PA 17111
(717) 564-1121
Fax (717) 564-1158
hrg@hrg-inc.com
www.hrg-inc.com

HALIFAX AREA WATER AND SEWER AUTHORITY
203 ARMSTRONG STREET
HALIFAX, PA 17032
(717) 896-8083

SANITARY SEWER PLAN AND PROFILE
PETERS MOUNTAIN ROAD
FOR
HALIFAX TWP. SANITARY SEWER EXTENSION PROJECT

HALIFAX TOWNSHIP DAUPHIN COUNTY PENNSYLVANIA

PROJ. MGR. –	JJM
DESIGN–	MDC
CADD–	RSF/BAB
CHECKED–	MDC
SCALE–	AS NOTED
DATE–	AUG. 2022

DRAWING NO. **PP-4**
SHEET NO. 7 OF 109
PROJECT 001650.0428

File name: P:\001650\001650-0428\CSD\Plan Sets\SANITARY\001650428-PP-02.dwg Layout:PETERS MOUNTAIN RD 1 Oct 05, 2022 - 4:30pm sbrott

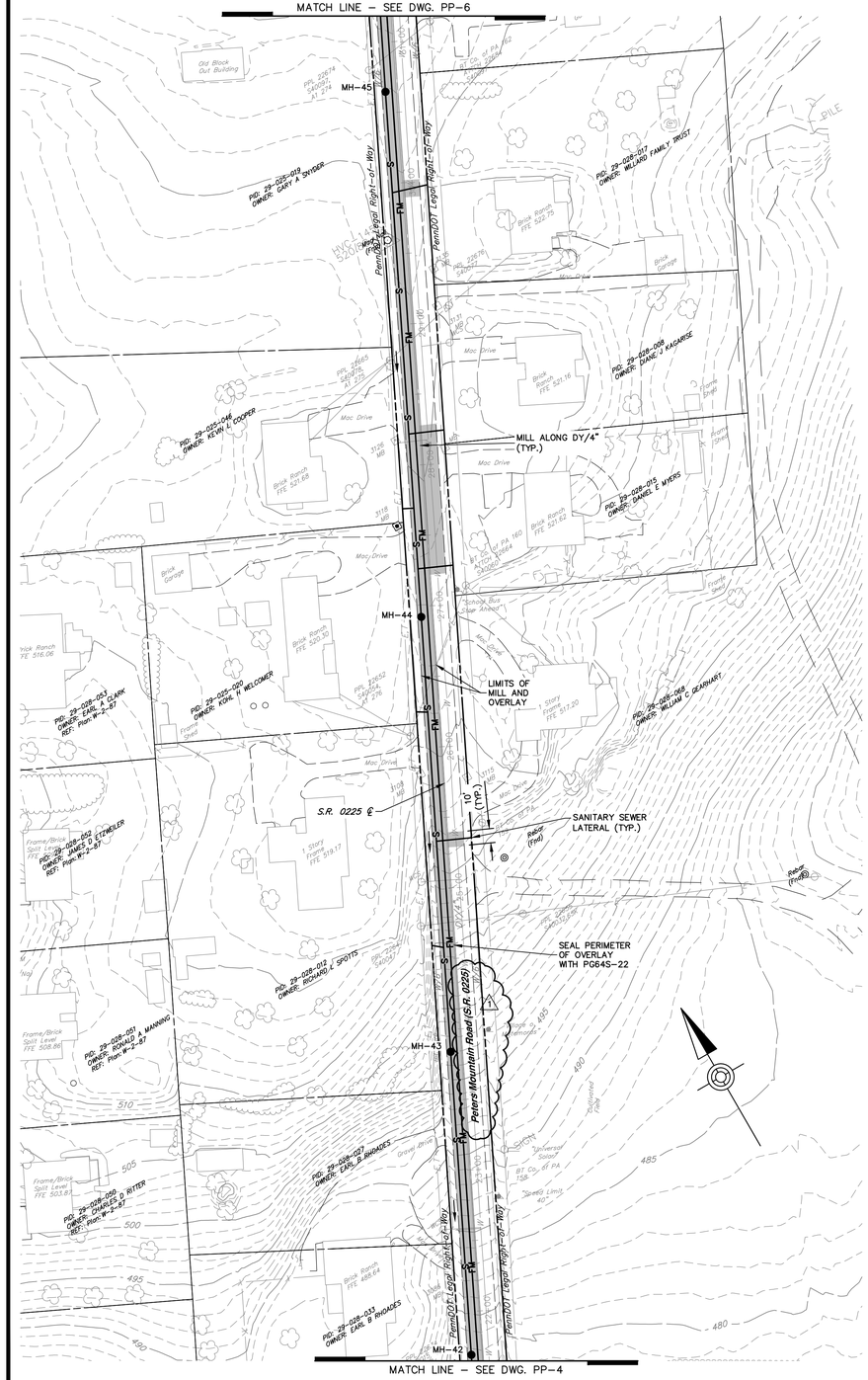

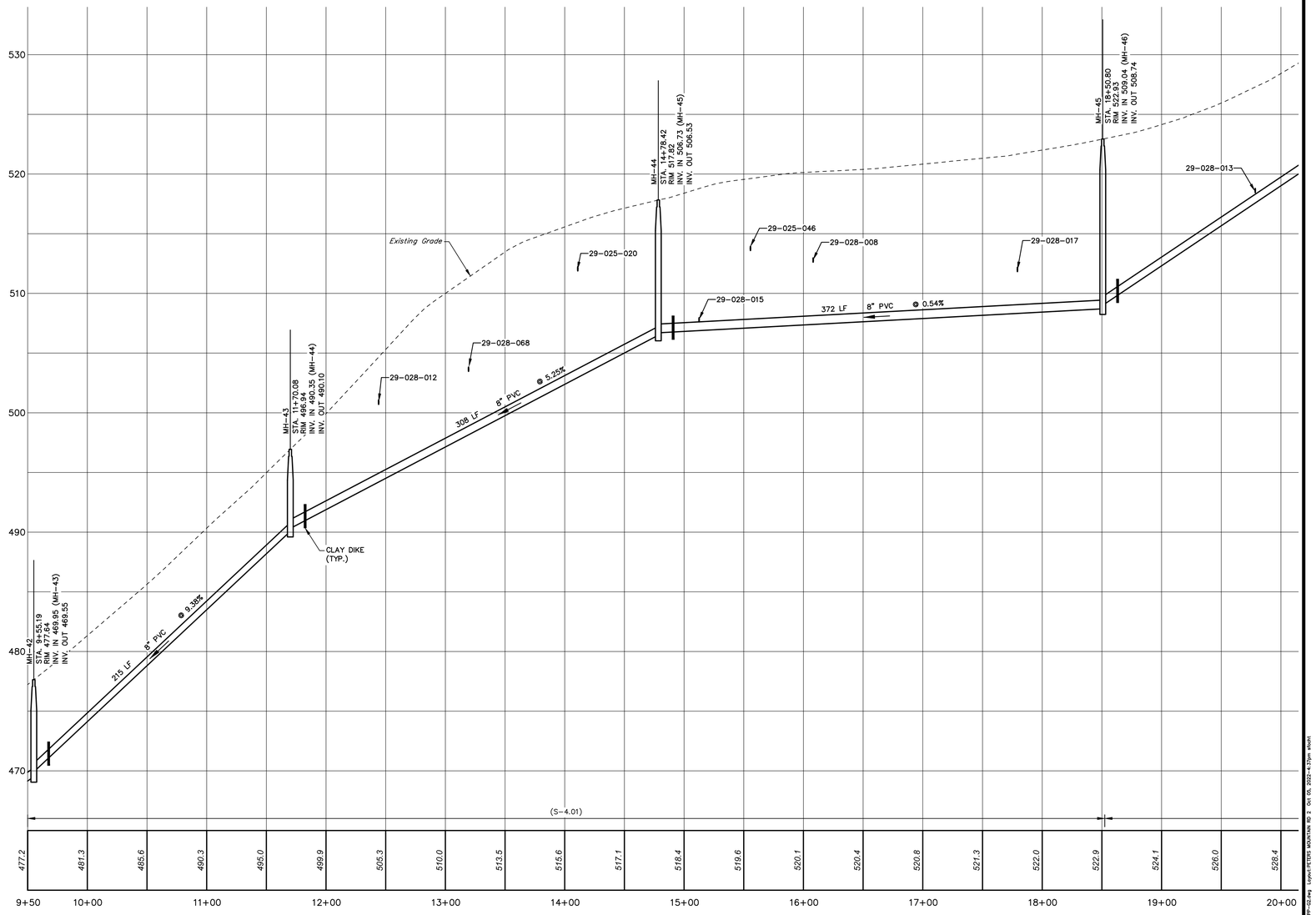

HORIZ: 50' 25' 0' 50'
VERT: 5' 2.5' 0' 5'
SCALE IN FEET

NO.	REVISION	DATE	BY
1	ADDENDUM NO. 2	10/5/22	RSF

COMMONWEALTH OF PENNSYLVANIA
REGISTERED PROFESSIONAL
MATTHEW DAVID CICHY
ENGINEER
PE074220

HRG
Herbert, Rowland & Grubic, Inc.
Engineering & Related Services
AN EMPLOYEE-OWNED COMPANY
369 East Park Drive
Harrisburg, PA 17111
(717) 564-1121
Fax (717) 564-1158
hrg@hrg-inc.com
www.hrg-inc.com

HALIFAX AREA
WATER AND SEWER AUTHORITY
203 ARMSTRONG STREET
HALIFAX, PA 17032
(717) 896-8083

SANITARY SEWER PLAN AND PROFILE
PETERS MOUNTAIN ROAD
FOR
HALIFAX TWP. SANITARY SEWER EXTENSION PROJECT
HALIFAX TOWNSHIP DAUPHIN COUNTY PENNSYLVANIA

PROJ. MGR. – JJM	
DESIGN– MDC	
CADD– RSF/BAB	
CHECKED–MDC	
SCALE– AS NOTED	
DATE– AUG. 2022	

DRAWING NO.
PP-5
SHEET NO.
8 OF 109
PROJECT 001650.0428

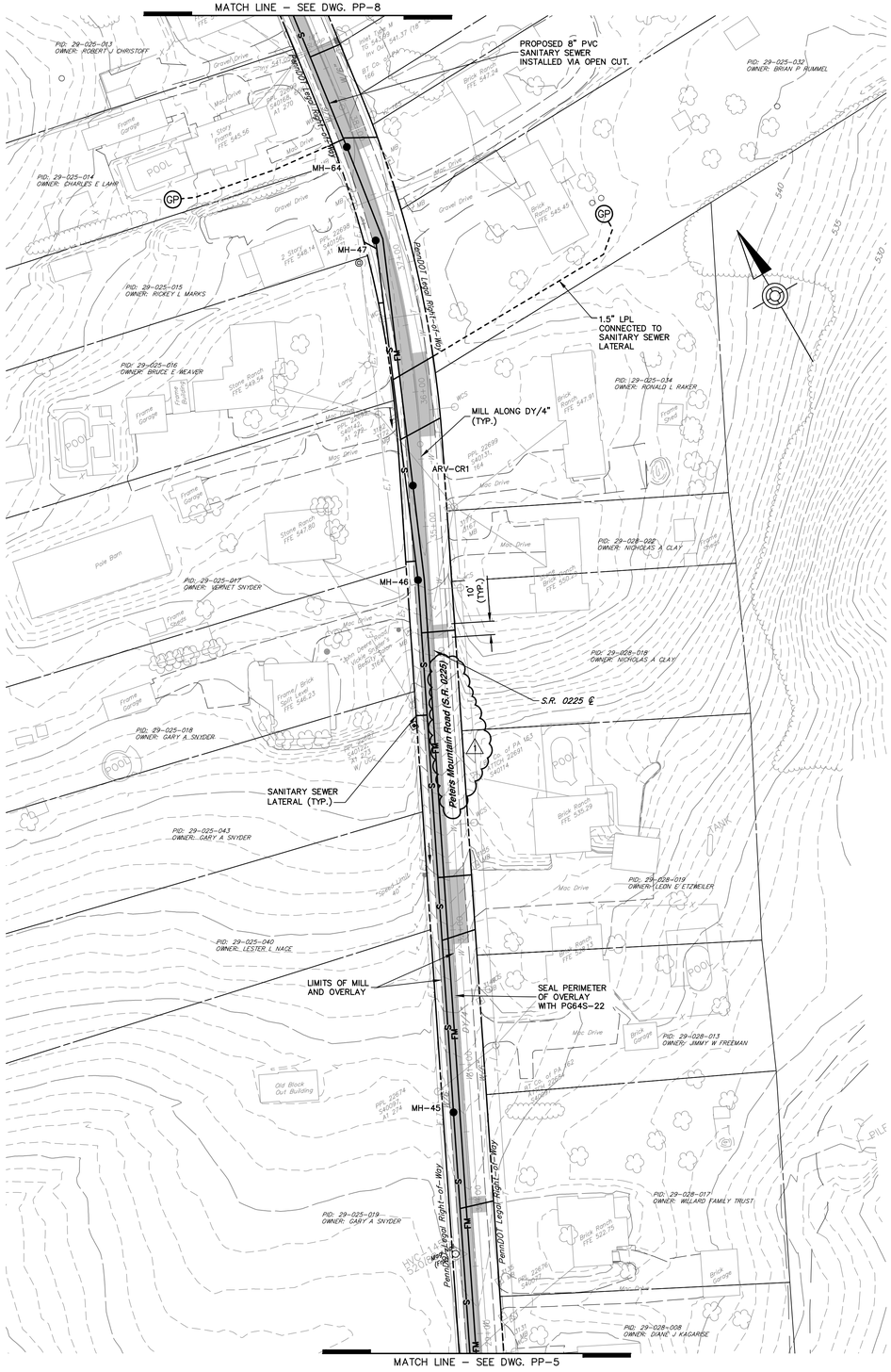

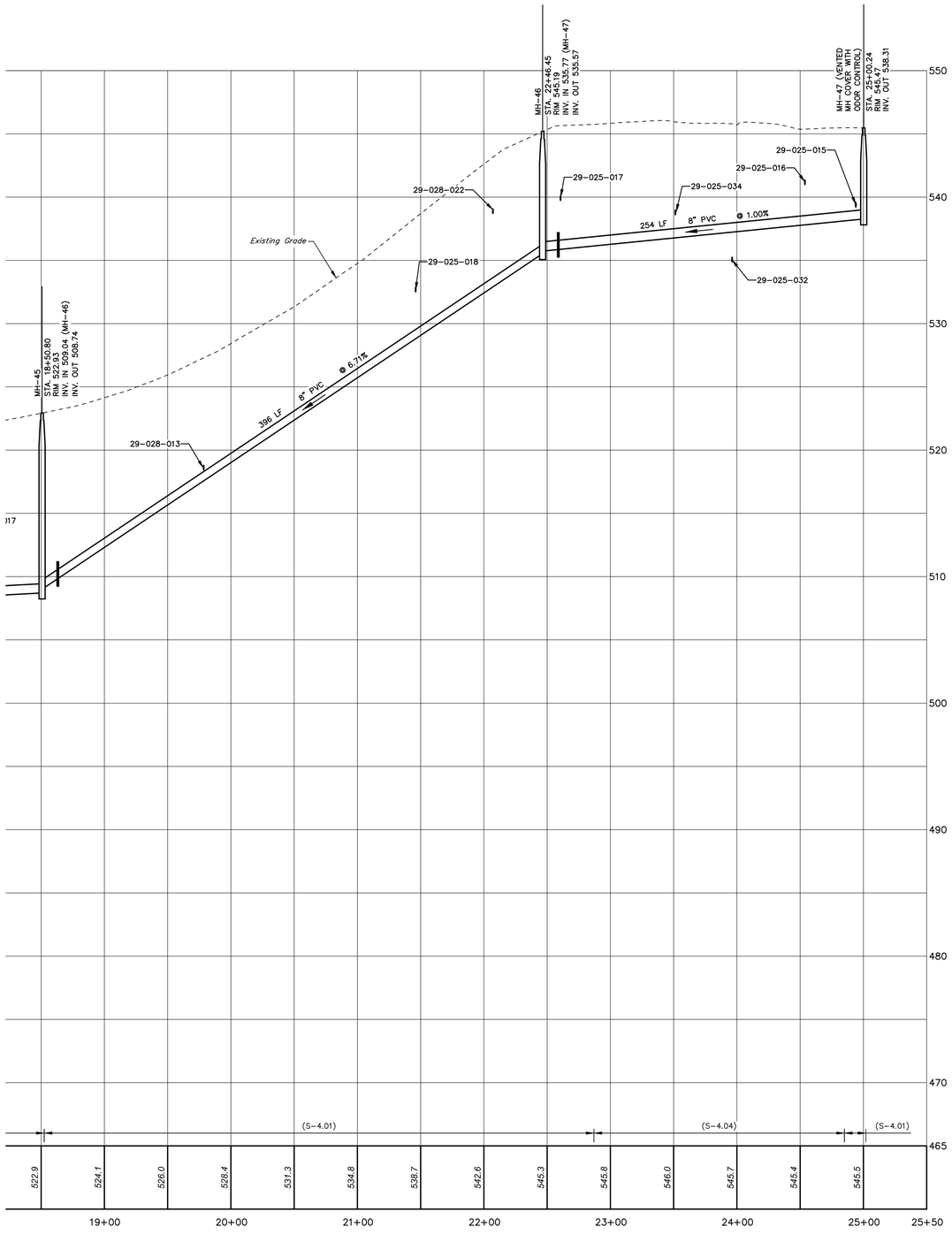

HORIZ: 50' 25' 0' 50'
VERT: 5' 2.5' 0' 5'
SCALE IN FEET

NO.	REVISION	DATE	BY
1	ADDENDUM NO. 2	10/5/22	RSF

COMMONWEALTH OF PENNSYLVANIA
REGISTERED PROFESSIONAL
MATTHEW DAVID CICHY
ENGINEER
PE074220

HRG
Herbert, Rowland & Grubic, Inc.
Engineering & Related Services
AN EMPLOYEE-OWNED COMPANY
369 East Park Drive
Harrisburg, PA 17111
(717) 564-1121
Fax (717) 564-1158
hrg@hrg-inc.com
www.hrg-inc.com

HALIFAX AREA
WATER AND SEWER AUTHORITY
203 ARMSTRONG STREET
HALIFAX, PA 17032
(717) 896-8083

SANITARY SEWER PLAN AND PROFILE
PETERS MOUNTAIN ROAD
FOR
HALIFAX TWP. SANITARY SEWER EXTENSION PROJECT
HALIFAX TOWNSHIP DAUPHIN COUNTY PENNSYLVANIA

PROJ. MGR. – JJM	
DESIGN– MDC	
CADD– RSF/BAB	
CHECKED–MDC	
SCALE– AS NOTED	
DATE– AUG. 2022	

DRAWING NO.
PP-6
SHEET NO.
9 OF 109
PROJECT 001650.0428

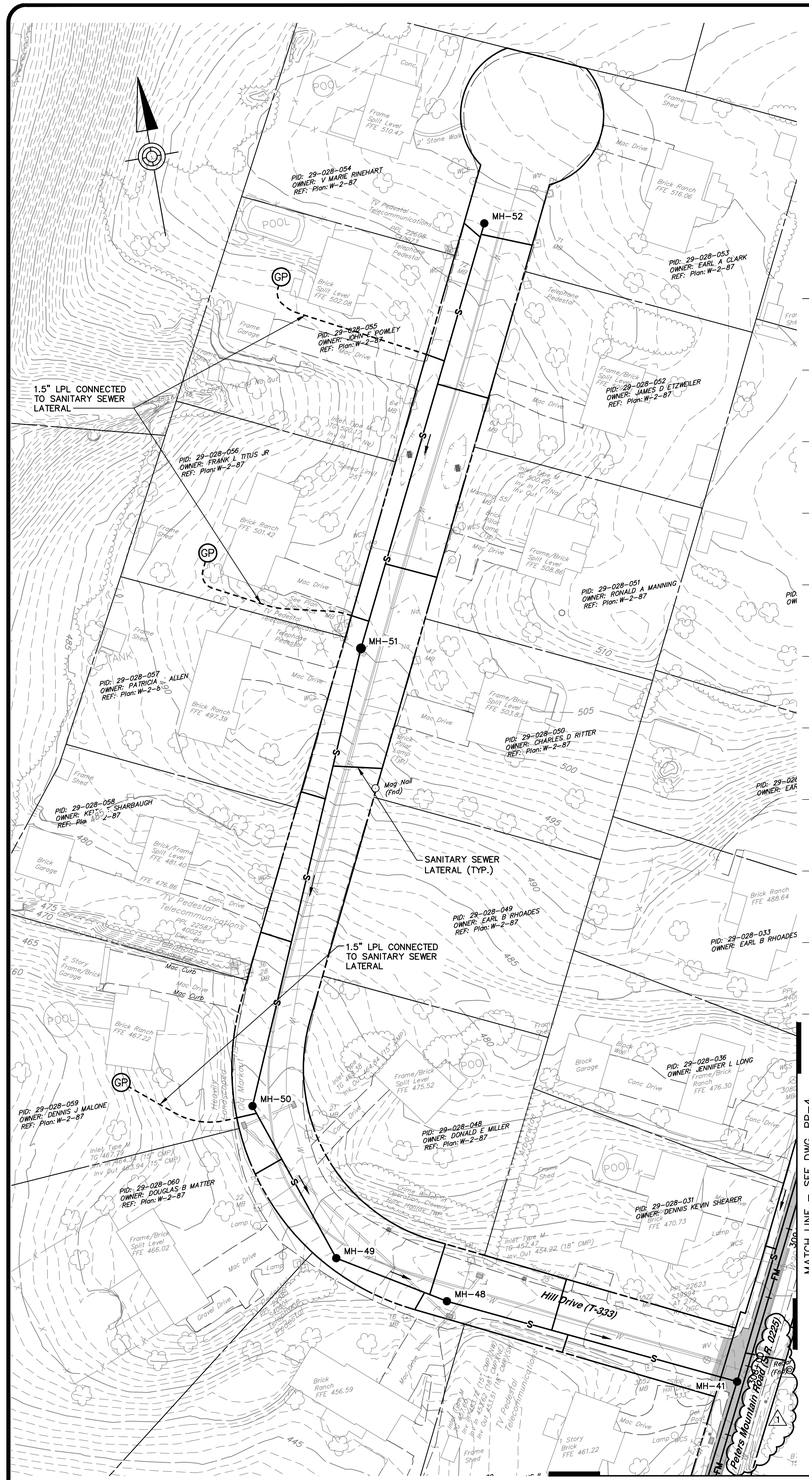

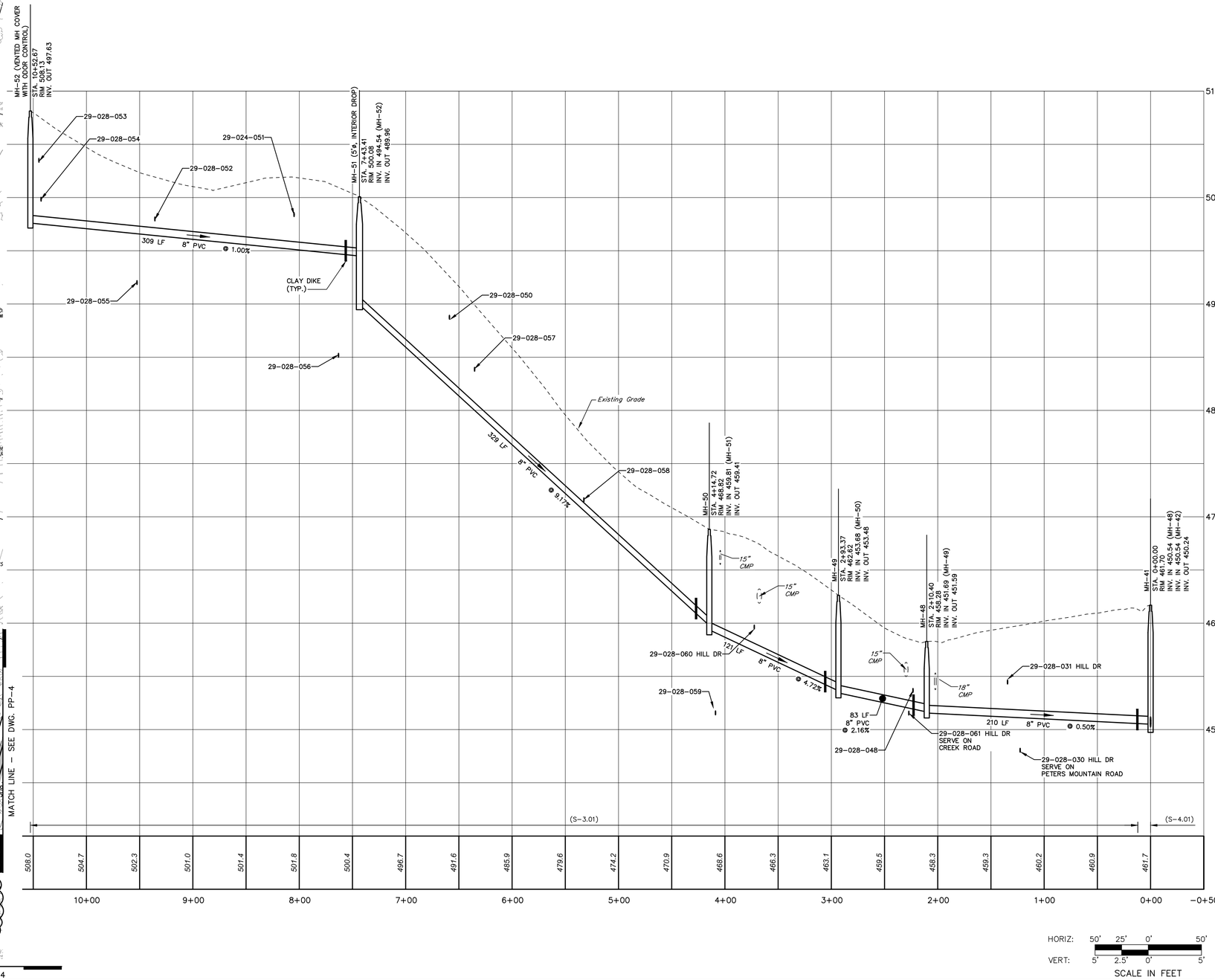

NO.	REVISION	DATE	BY
1	ADDENDUM NO. 2	10/5/22	RSF

COMMONWEALTH OF PENNSYLVANIA
REGISTERED PROFESSIONAL
MATTHEW DAVID CICHY
ENGINEER
PE074220

HRG
Herbert, Rowland & Grubic, Inc.
Engineering & Related Services
AN EMPLOYEE-OWNED COMPANY
369 East Park Drive
Harrisburg, PA 17111
(717) 564-1121
Fax (717) 564-1158
hrg@hrg-inc.com
www.hrg-inc.com

HALIFAX AREA
WATER AND SEWER AUTHORITY
203 ARMSTRONG STREET
HALIFAX, PA 17032
(717) 896-8083

SANITARY SEWER PLAN AND PROFILE
HILL DRIVE
FOR
HALIFAX TWP. SANITARY SEWER EXTENSION PROJECT
HALIFAX TOWNSHIP DAUPHIN COUNTY PENNSYLVANIA

PROJ. MGR. – JJM	
DESIGN– MDC	
CADD– RSF/BAB	
CHECKED–MDC	
SCALE– AS NOTED	
DATE– AUG. 2022	

DRAWING NO.
PP-7
SHEET NO.
10 OF 109
PROJECT 001650.0428

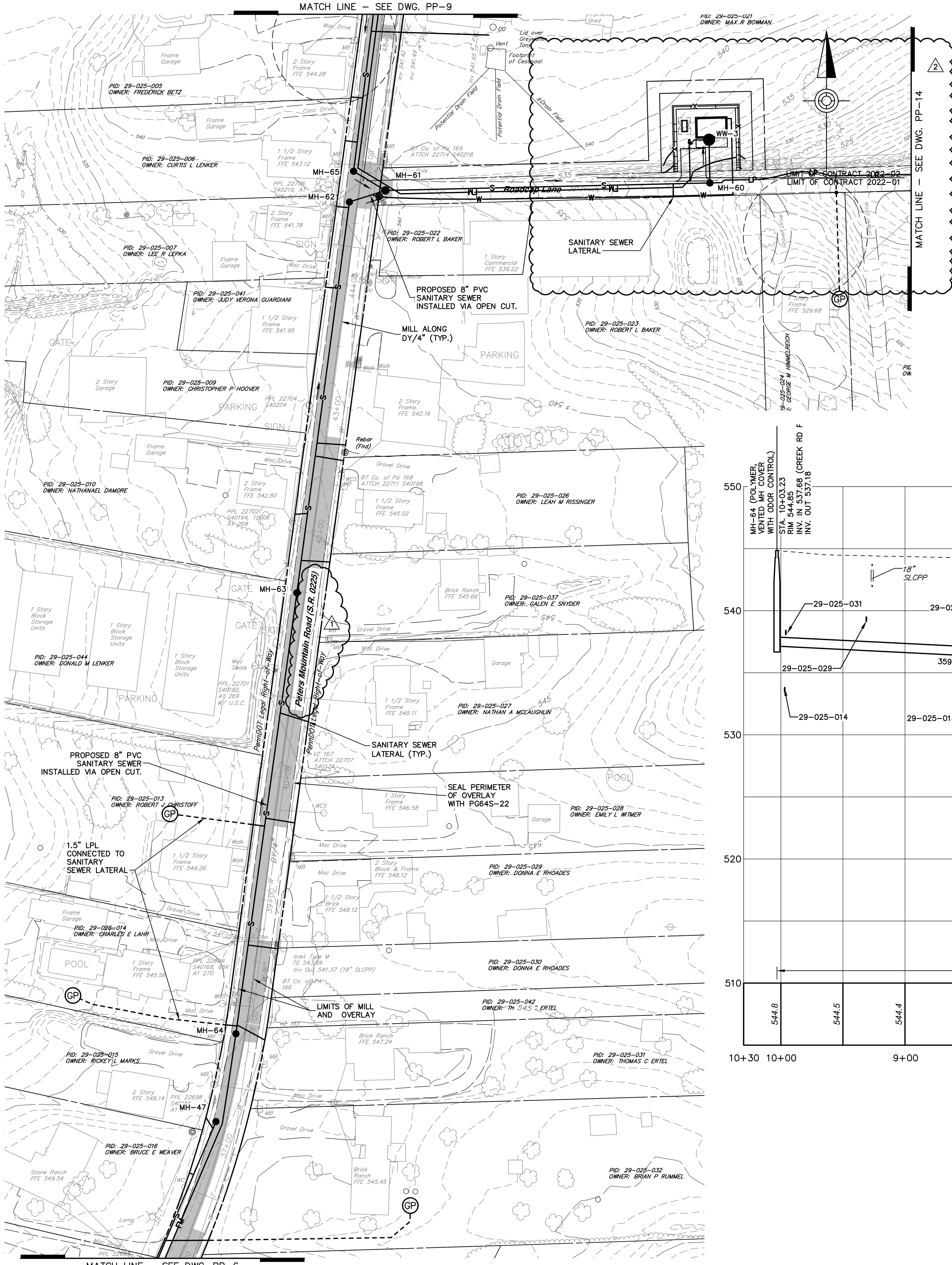

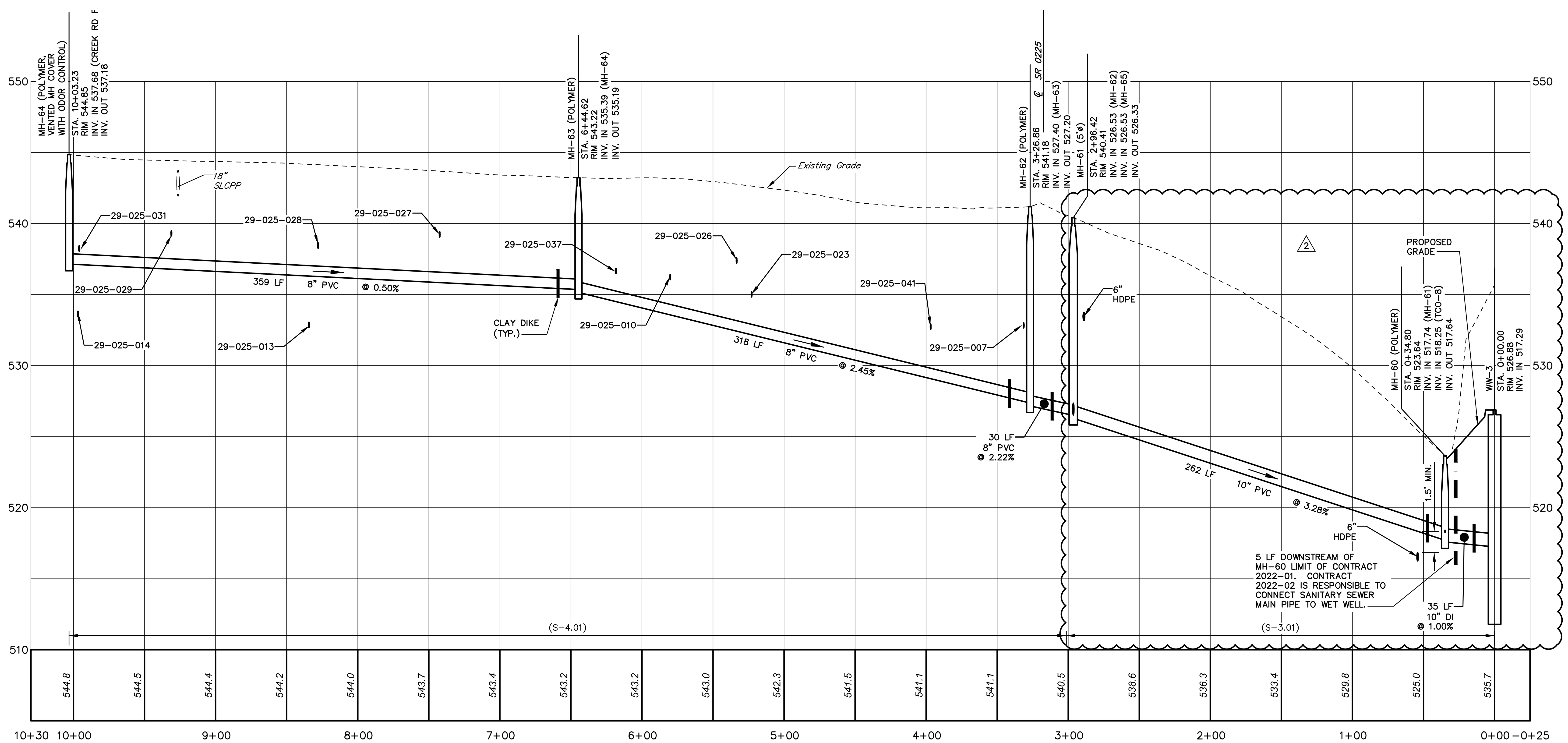

NOTES:
1. LIMIT OF CONTRACT IS TO IDENTIFY DEMARCATION OF GRAVITY SEWER INSTALLATION ONLY BETWEEN MH-60 AND THE WET WELL. CONTRACT 2022-02 IS RESPONSIBLE FOR PUMP STATION IMPROVEMENTS IN ACCORDANCE WITH OTHER DRAWINGS AND CONTRACT REQUIREMENTS.
2. PUMP STATION PAVEMENT TO BE COMPLETED BY CONTRACT 2022-02.

HORIZ: 50' 25' 0' 50'
VERT: 5' 2.5' 0' 5'
SCALE IN FEET

NO.	REVISION	DATE	BY
2	WORK CHANGE DIRECTIVE NO. 1	3/6/23	RSF
1	ADDENDUM NO. 2	10/5/22	RSF

COMMONWEALTH OF PENNSYLVANIA REGISTERED PROFESSIONAL ENGINEER MATTHEW DAVID CICHY PE074220

HRG
Herbert, Rowland & Grubic, Inc.
Engineering & Related Services
AN EMPLOYEE-OWNED COMPANY
369 East Park Drive
Harrisburg, PA 17111
(717) 564-1121
Fax (717) 564-1158
hrg@hrg-inc.com
www.hrg-inc.com

HALIFAX AREA
WATER AND SEWER AUTHORITY
203 ARMSTRONG STREET
HALIFAX, PA 17032
(717) 896-8083

SANITARY SEWER PLAN AND PROFILE
PETERS MOUNTAIN ROAD
FOR
HALIFAX TWP. SANITARY SEWER EXTENSION PROJECT

HALIFAX TOWNSHIP DAUPHIN COUNTY PENNSYLVANIA

PROJ. MGR. – JJM
DESIGN– MDC
CADD– RSF/BAB
CHECKED–MDC
SCALE– AS NOTED
DATE– AUG. 2022

DRAWING NO. **PP-8**
SHEET NO. 11 OF 109
PROJECT 001650.0428

File name: P:\0016\001650_0428\C3D\Plan Sets\SAN\RCPS MOVE PP-G2.dwg Layout:PETERS MOUNTAIN RD 4 Mar 28, 2023–2:31pm sfocht

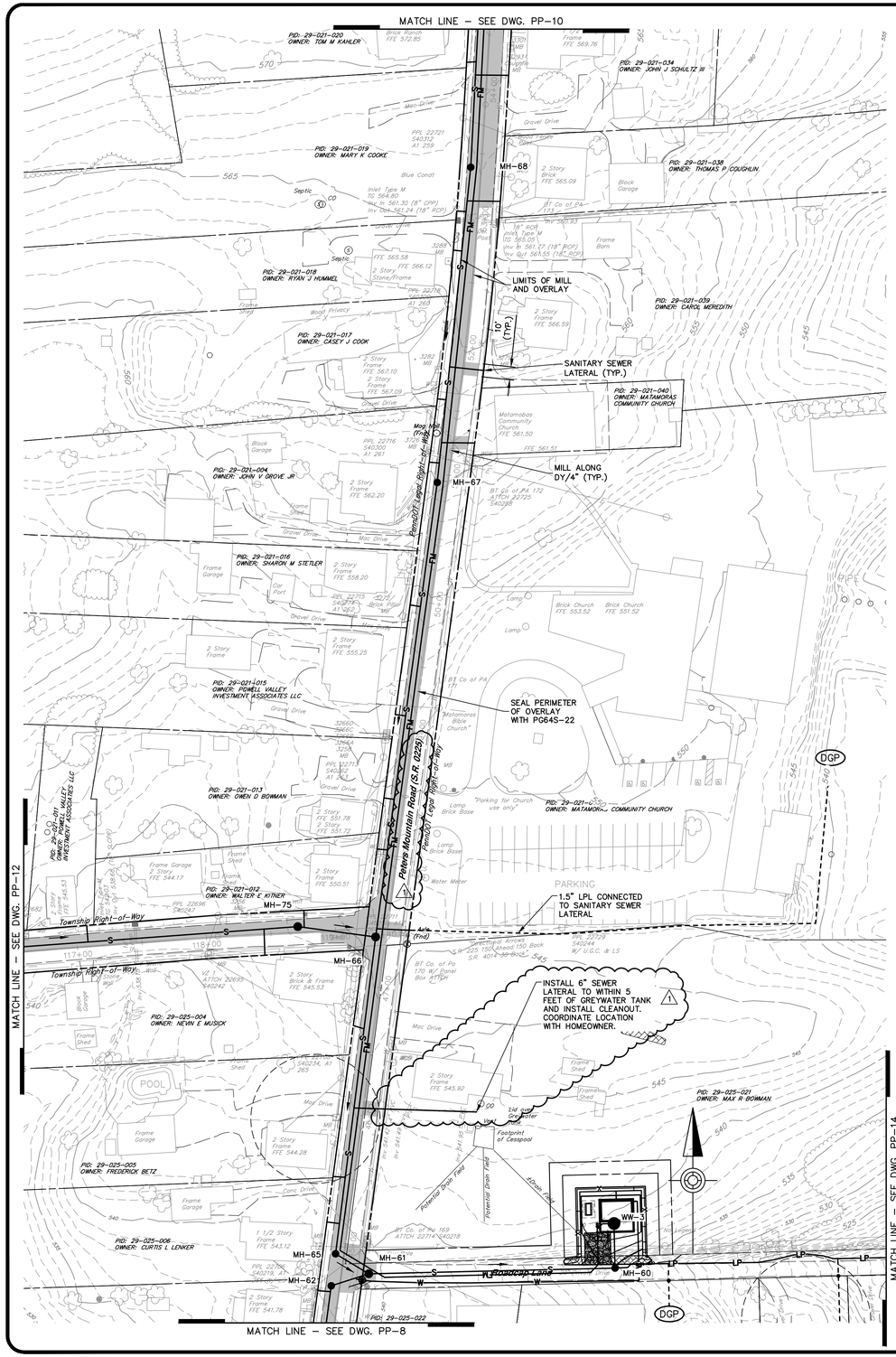

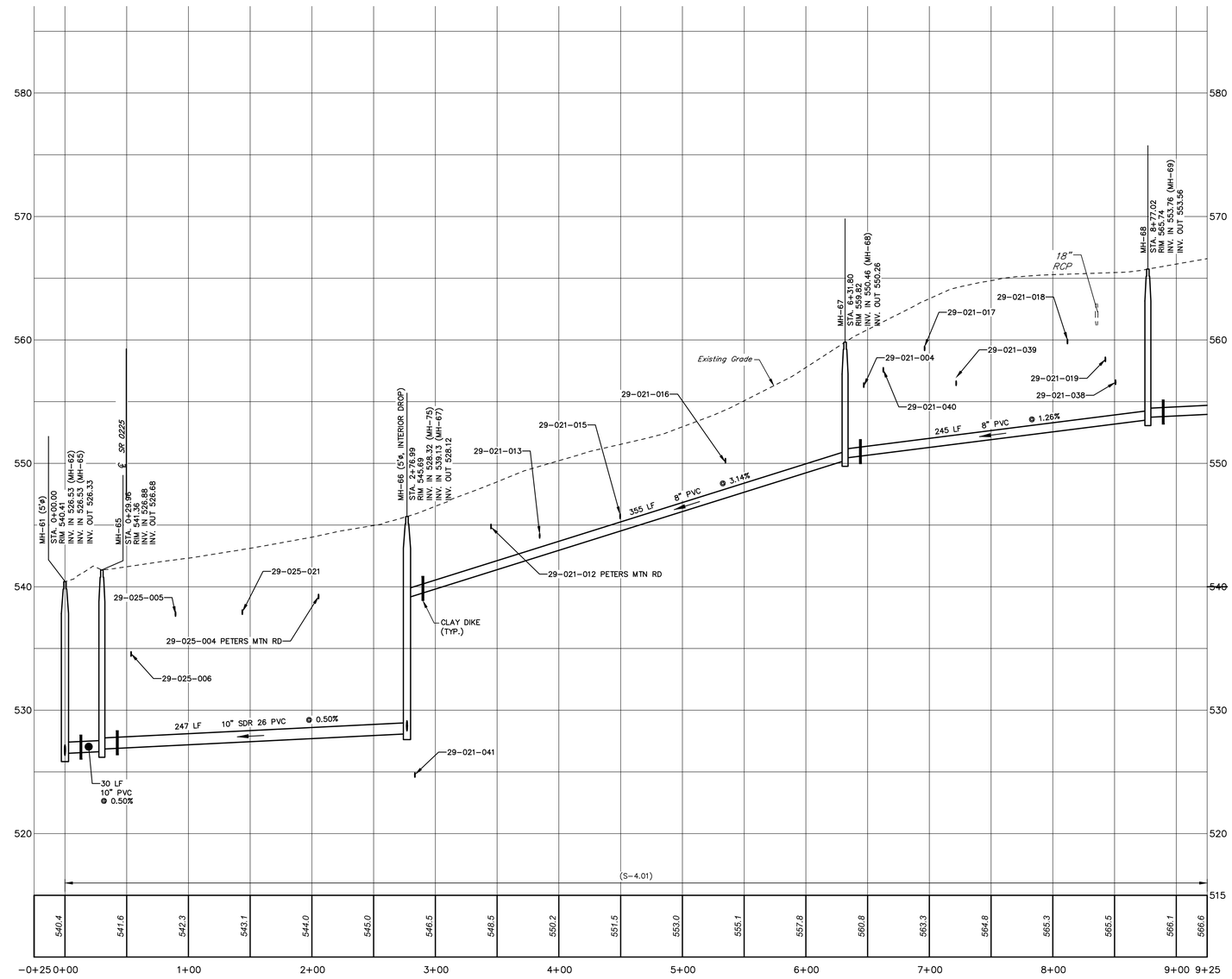

NO.	REVISION	DATE	BY
1	ADDENDUM NO. 2	10/5/22	RSF

COMMONWEALTH OF PENNSYLVANIA
REGISTERED PROFESSIONAL
MATTHEW DAVID CICHY
ENGINEER
PE074220

HRG
Herbert, Rowland & Grubic, Inc.
Engineering & Related Services
AN EMPLOYEE-OWNED COMPANY
369 East Park Drive
Harrisburg, PA 17111
(717) 564-1121
Fax (717) 564-1158
hrg@hrg-inc.com
www.hrg-inc.com

HALIFAX AREA
WATER AND SEWER AUTHORITY
203 ARMSTRONG STREET
HALIFAX, PA 17032
(717) 896-8083

SANITARY SEWER PLAN AND PROFILE
PETERS MOUNTAIN ROAD
FOR
HALIFAX TWP. SANITARY SEWER EXTENSION PROJECT
HALIFAX TOWNSHIP DAUPHIN COUNTY PENNSYLVANIA

PROJ. MGR. – JJM
DESIGN– MDC
CADD– RSF/BAB
CHECKED–MDC
SCALE– AS NOTED
DATE– AUG. 2022

DRAWING NO.
PP-9
SHEET NO.
12 OF 109
PROJECT 001650.0428

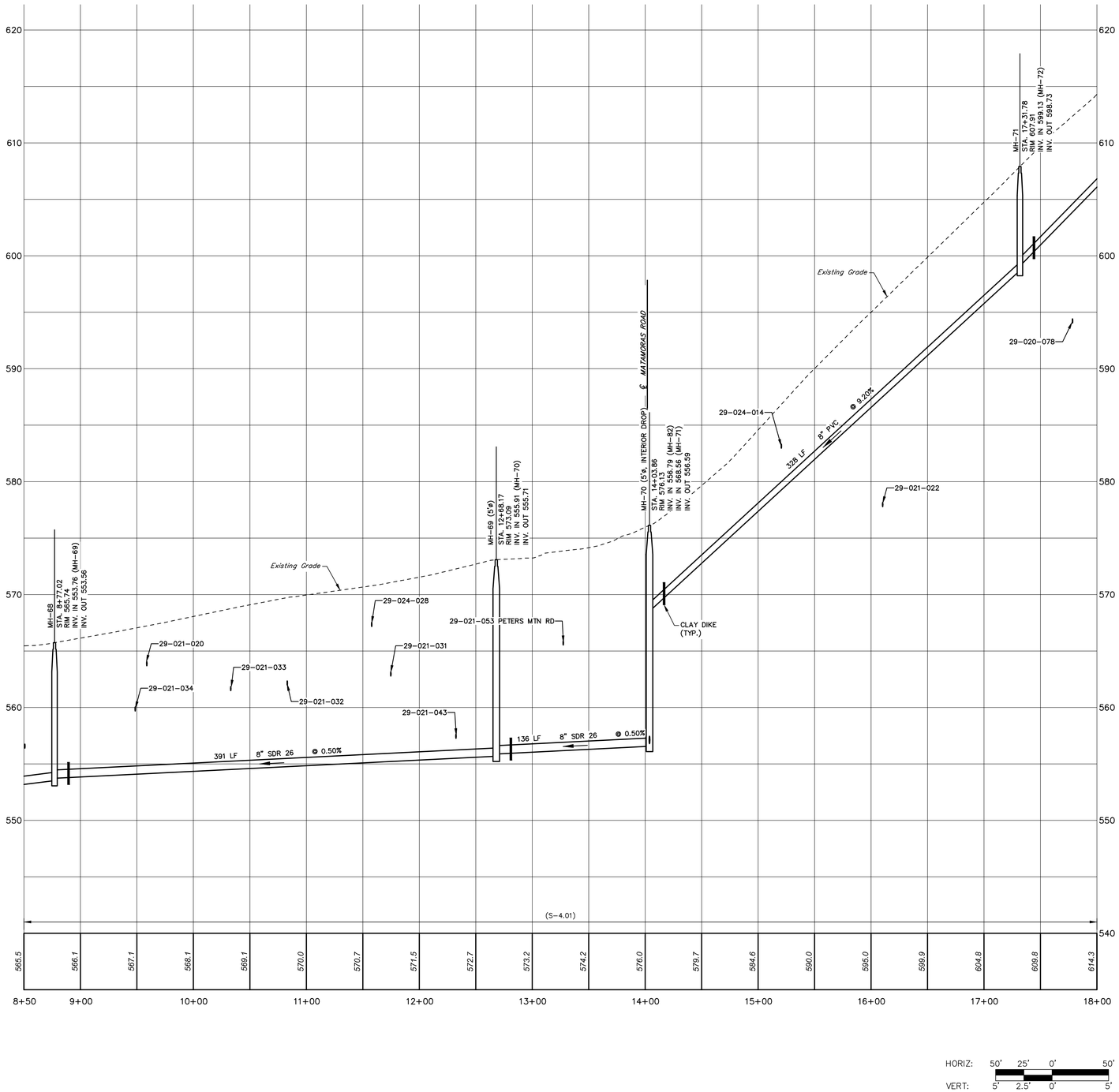

HORIZ: 50' 25' 0' 50'
VERT: 5' 2.5' 0' 5'
SCALE IN FEET

NO.	REVISION	DATE	BY
1	ADDENDUM NO. 2	10/5/22	RSF

COMMONWEALTH OF PENNSYLVANIA
REGISTERED PROFESSIONAL
MATTHEW DAVID CICHY
ENGINEER
PE074220

HRG
Herbert, Rowland & Grubic, Inc.
Engineering & Related Services
AN EMPLOYEE-OWNED COMPANY
369 East Park Drive
Harrisburg, PA 17111
(717) 564-1121
Fax (717) 564-1158
hrg@hrg-inc.com
www.hrg-inc.com

HALIFAX AREA
WATER AND SEWER AUTHORITY
203 ARMSTRONG STREET
HALIFAX, PA 17032
(717) 896-8083

SANITARY SEWER PLAN AND PROFILE
PETERS MOUNTAIN ROAD
FOR
HALIFAX TWP. SANITARY SEWER EXTENSION PROJECT
HALIFAX TOWNSHIP DAUPHIN COUNTY PENNSYLVANIA

PROJ. MGR. – JJM
DESIGN– MDC
CADD– RSF/BAB
CHECKED–MDC
SCALE– AS NOTED
DATE– AUG. 2022

DRAWING NO.
PP-10
SHEET NO.
13 OF 109
PROJECT 001650.0428

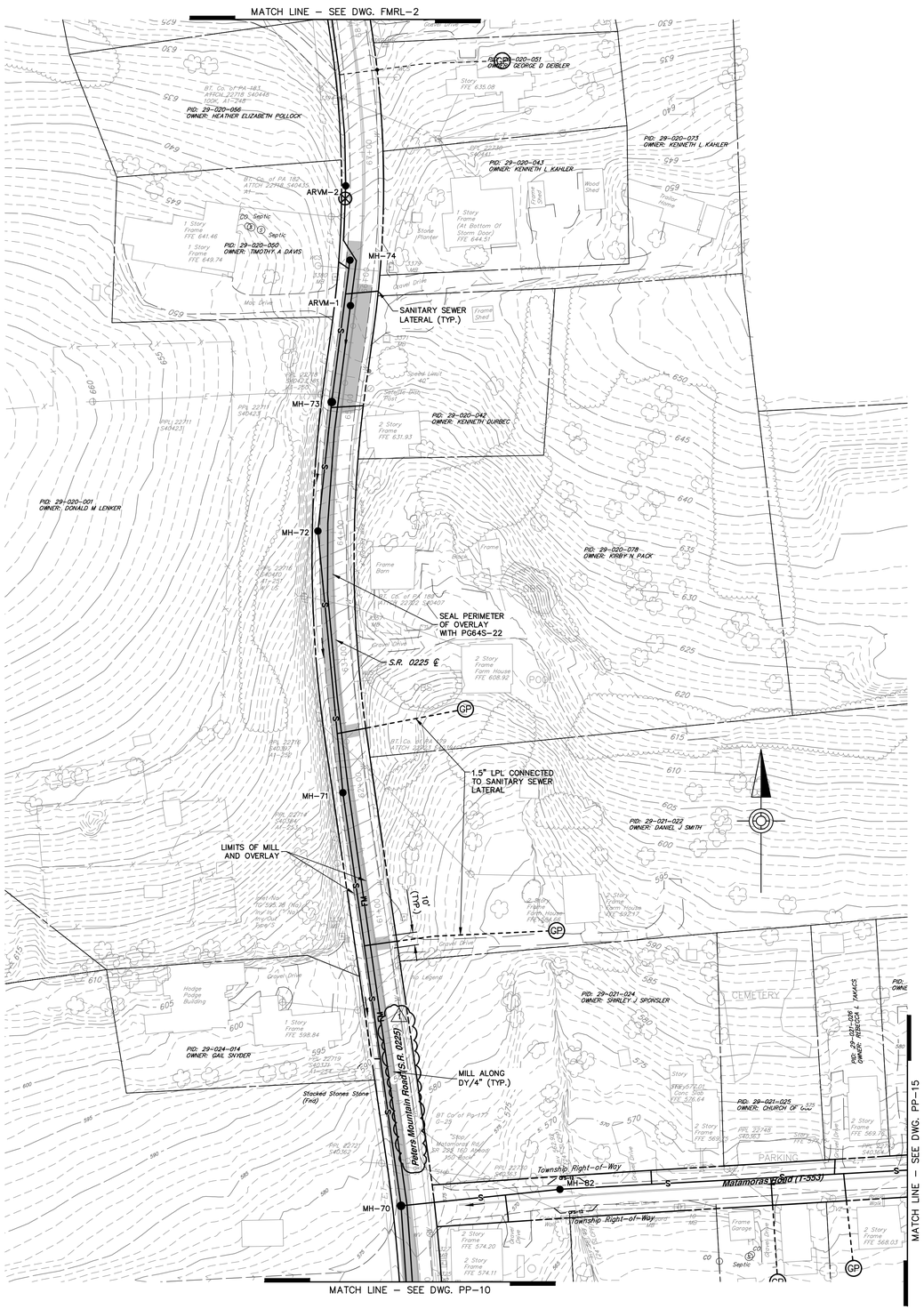

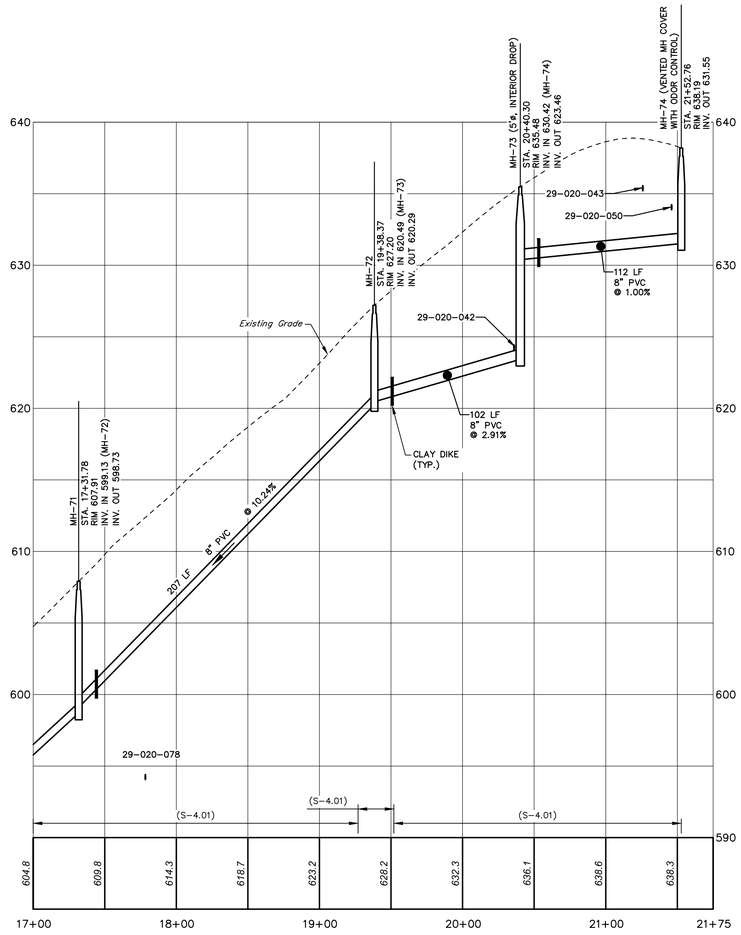

HORIZ: 50' 25' 0' 50'
VERT: 5' 2.5' 0' 5'
SCALE IN FEET

NO.	REVISION	DATE	BY
1	ADDENDUM NO. 2	10/5/22	RSF

COMMONWEALTH OF PENNSYLVANIA
REGISTERED PROFESSIONAL
MATTHEW DAVID CICHY
ENGINEER
PE074220

HRG
Herbert, Rowland & Grubic, Inc.
Engineering & Related Services
AN EMPLOYEE-OWNED COMPANY
369 East Park Drive
Harrisburg, PA 17111
(717) 564-1121
Fax (717) 564-1158
hrg@hrg-inc.com
www.hrg-inc.com

HALIFAX AREA
WATER AND SEWER AUTHORITY
203 ARMSTRONG STREET
HALIFAX, PA 17032
(717) 896-8083

SANITARY SEWER PLAN AND PROFILE
PETERS MOUNTAIN ROAD
FOR
HALIFAX TWP. SANITARY SEWER EXTENSION PROJECT
HALIFAX TOWNSHIP **DAUPHIN COUNTY** **PENNSYLVANIA**

PROJ. MGR. –	JJM
DESIGN–	MDC
CADD–	RSF/BAB
CHECKED–	MDC
SCALE–	AS NOTED
DATE–	AUG. 2022

DRAWING NO.
PP-11
SHEET NO.
14 OF **109**
PROJECT 001650.0428

File name: P:\2016\001650_SAR\SWS\PP\new files\SAR\001650042B-PP-02.dwg Layout:PETERS MOUNTAIN RD 2 Oct 05, 2022 - 4:10pm ebbott

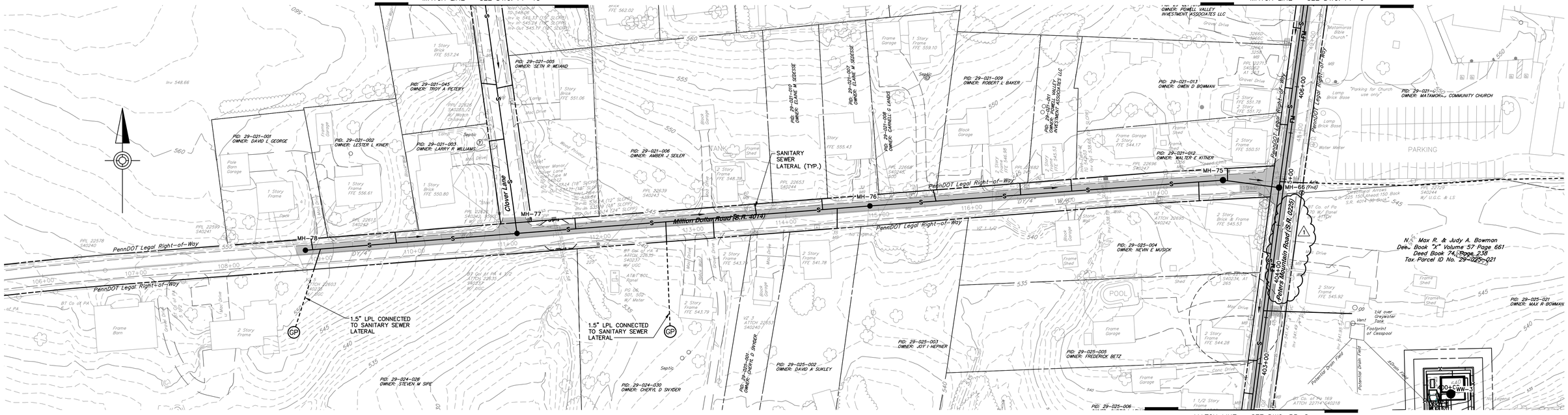

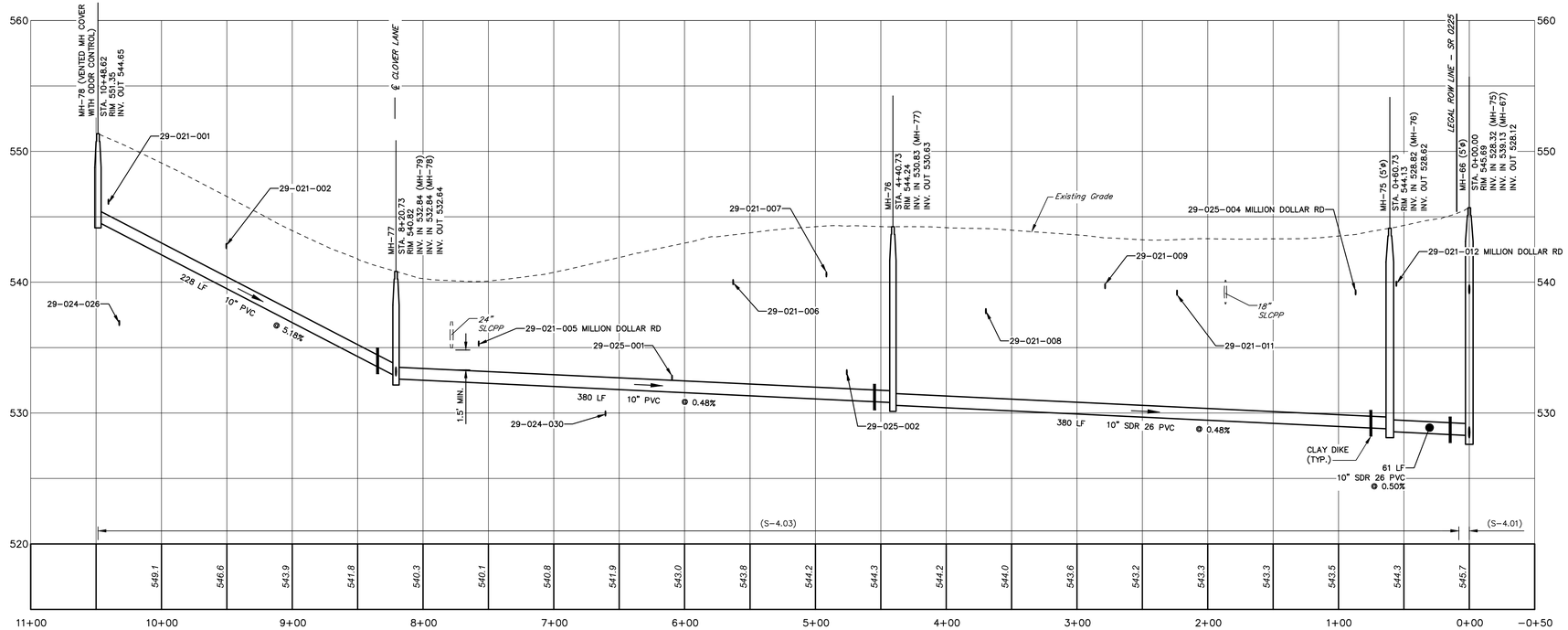

NOTES:
1. ALL LPS LATERALS TO BE INSTALLED ON THE SIDE OF THE ROAD CLOSEST TO THE LPS (SHORT SIDE) SHALL BE INSTALLED VIA OPEN CUT METHOD.
2. ALL LPS LATERALS TO BE INSTALLATION THE OPPOSITE SIDE OF THE ROAD FROM THE LPS (LONG SIDE) SHALL BE INSTALLED VIA TRENCHLESS METHOD. ALL LONG SIDE LATERAL INSTALLS WILL REQUIRE POT HOLES FOR THE IDENTIFICATION AND DEPTH VERIFICATION OF CROSSED UTILITIES.
3. ALL GRAVITY SEWER LATERALS SHALL BE INSTALLED VIA OPEN CUT METHOD.

HORIZ: 50' 25' 0' 50'
VERT: 5' 2.5' 0' 5'
SCALE IN FEET

NO.	REVISION	DATE	BY
1	ADDENDUM NO. 2	10/5/22	RSF

COMMONWEALTH OF PENNSYLVANIA
REGISTERED PROFESSIONAL
MATTHEW DAVID CICHY
ENGINEER
PE074220

HRG
Herbert, Rowland & Grubic, Inc.
Engineering & Related Services
AN EMPLOYEE-OWNED COMPANY
369 East Park Drive
Harrisburg, PA 17111
(717) 564-1121
Fax (717) 564-1158
hrg@hrg-inc.com
www.hrg-inc.com

HALIFAX AREA WATER AND SEWER AUTHORITY
203 ARMSTRONG STREET
HALIFAX, PA 17032
(717) 896-8083

SANITARY SEWER PLAN AND PROFILE
MILLION DOLLAR ROAD
FOR
HALIFAX TWP. SANITARY SEWER EXTENSION PROJECT

HALIFAX TOWNSHIP DAUPHIN COUNTY PENNSYLVANIA

PROJ. MGR. –	JJM
DESIGN–	MDC
CADD–	RSF/BAB
CHECKED–	MDC
SCALE–	AS NOTED
DATE–	AUG. 2022

DRAWING NO. **PP-12**
SHEET NO. 15 OF 109
PROJECT 001650.0428

File name: P:\2001\001650.0428\CAD\Plan Sets\SAN\MOD250428-PP-01.dwg Layout:MILLION DOLLAR RD Oct 06, 2022 - 7:10am vhoerl

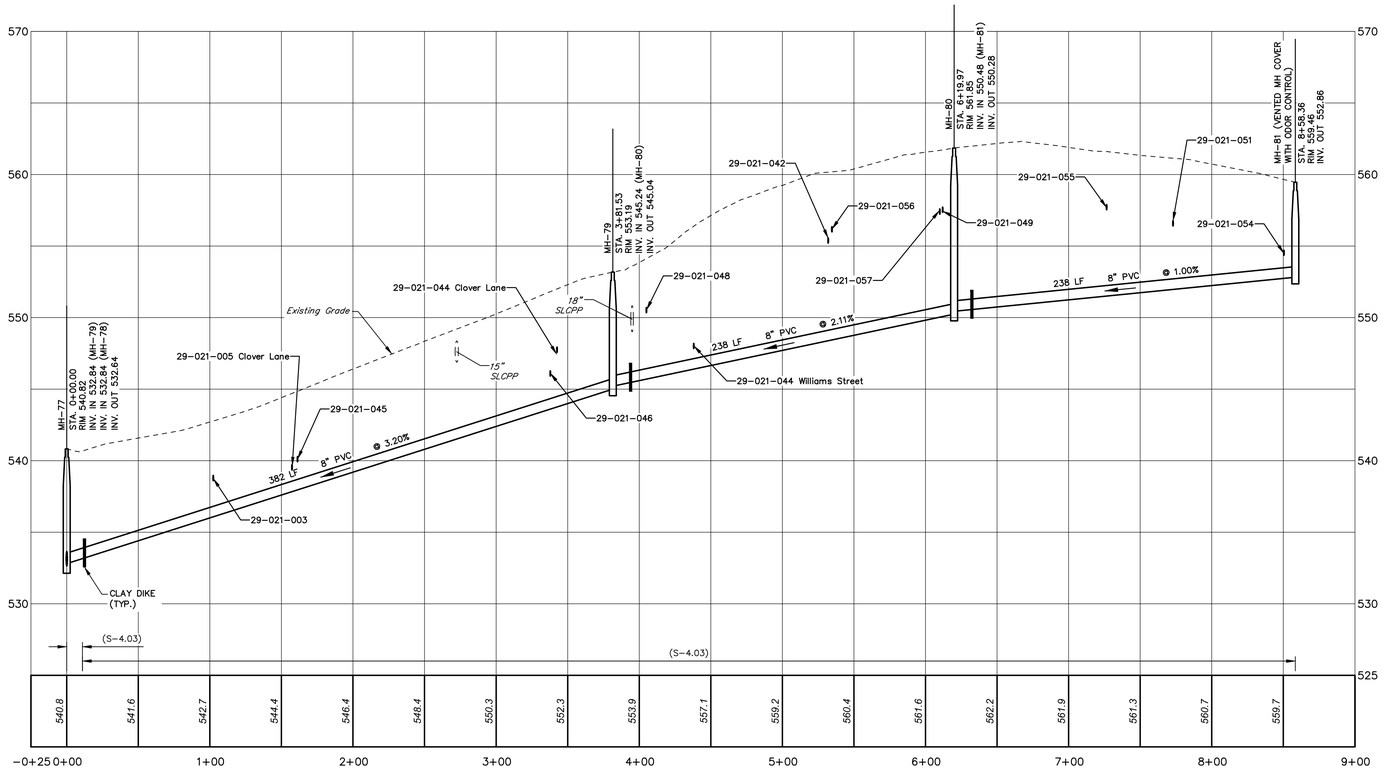

HORIZ: 50' 25' 0' 50'
VERT: 5' 2.5' 0' 5'
SCALE IN FEET

NO.	REVISION	DATE	BY

COMMONWEALTH OF PENNSYLVANIA
REGISTERED PROFESSIONAL
MATTHEW DAVID CICHY
ENGINEER
PE074220

HRG
Herbert, Rowland & Grubic, Inc.
Engineering & Related Services
AN EMPLOYEE-OWNED COMPANY
369 East Park Drive
Harrisburg, PA 17111
(717) 564-1121
Fax (717) 564-1158
hrg@hrg-inc.com
www.hrg-inc.com

HALIFAX AREA
WATER AND SEWER AUTHORITY
203 ARMSTRONG STREET
HALIFAX, PA 17032
(717) 896-8083

SANITARY SEWER PLAN AND PROFILE
CLOVER LANE AND WILLIAMS STREET
FOR
HALIFAX TWP. SANITARY SEWER EXTENSION PROJECT
HALIFAX TOWNSHIP DAUPHIN COUNTY PENNSYLVANIA

PROJ. MGR. – JJM	
DESIGN– MDC	
CADD– RSF/BAB	
CHECKED–MDC	
SCALE– AS NOTED	
DATE– AUG. 2022	

DRAWING NO.
PP-13
SHEET NO.
16 OF 109
PROJECT 001650.0428

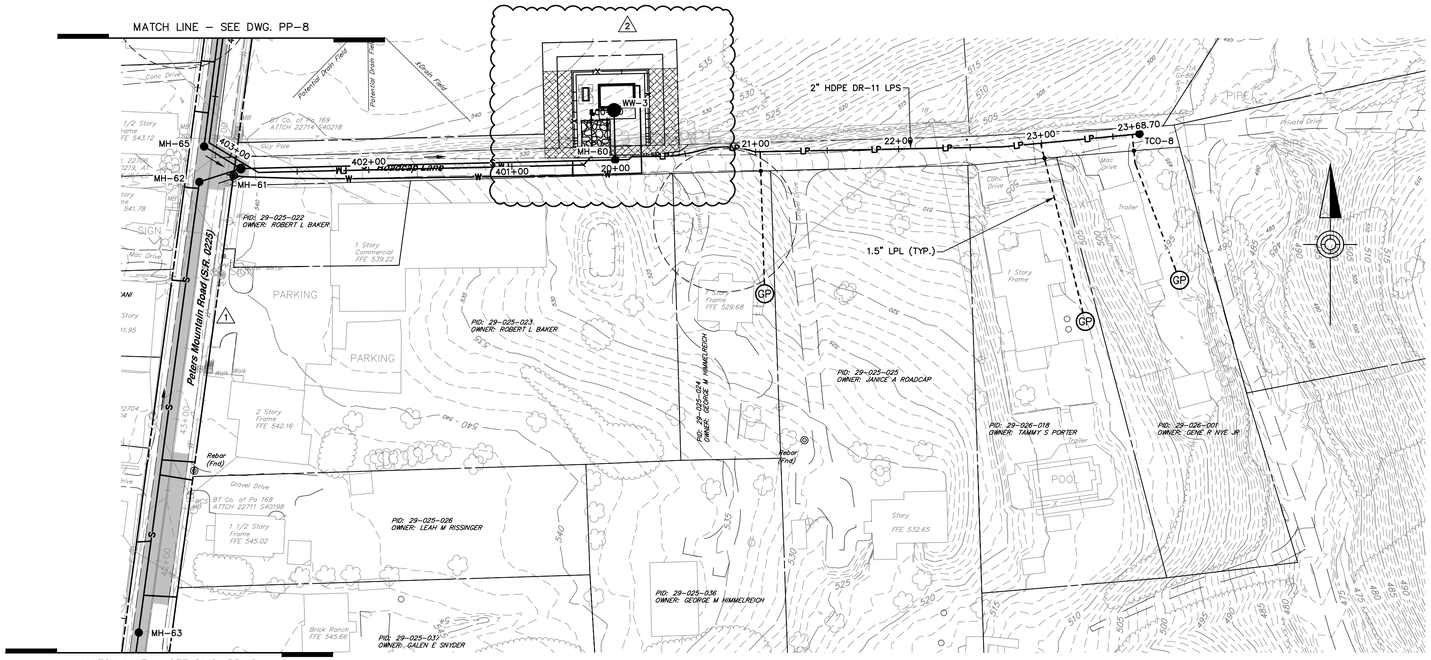

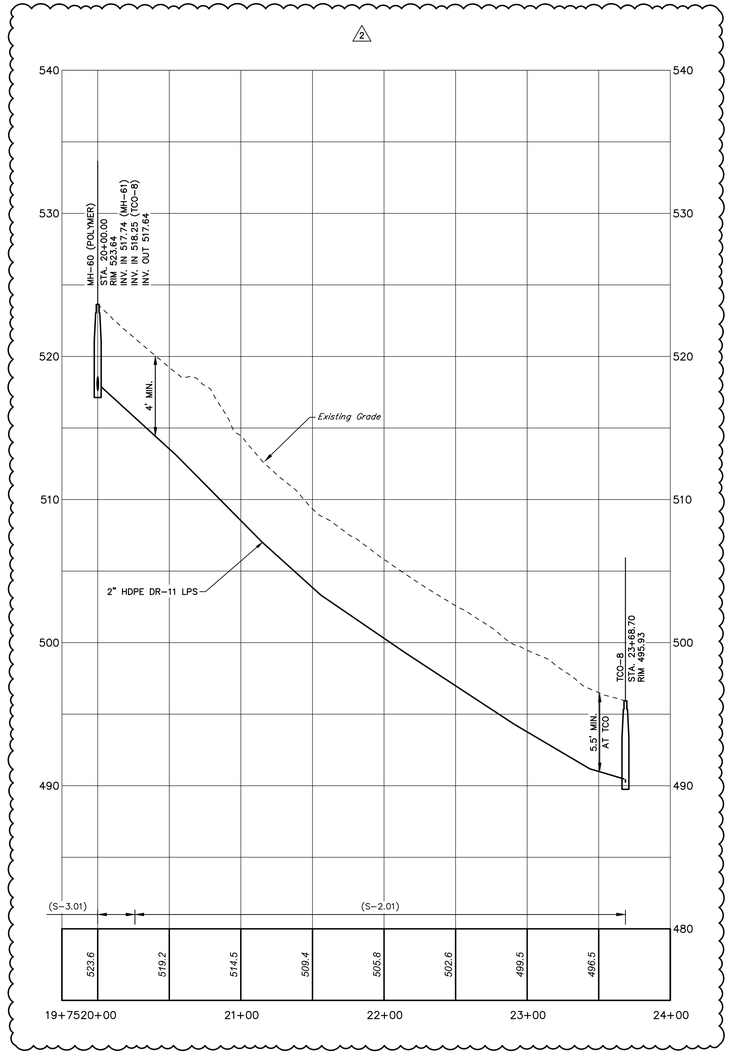

HORIZ: 50' 25' 0' 50'
VERT: 5' 2.5' 0' 5'
SCALE IN FEET

NO.	REVISION	DATE	BY
2	WORK CHANGE DIRECTIVE NO. 1	3/6/23	RSF
1	ADDENDUM NO. 2	10/5/22	RSF

COMMONWEALTH OF PENNSYLVANIA
REGISTERED PROFESSIONAL
MATTHEW DAVID CICHY
ENGINEER
PE074220

HRG
Herbert, Rowland & Grubic, Inc.
Engineering & Related Services
AN EMPLOYEE-OWNED COMPANY
369 East Park Drive
Harrisburg, PA 17111
(717) 564-1121
Fax (717) 564-1158
hrg@hrg-inc.com
www.hrg-inc.com

HALIFAX AREA
WATER AND SEWER AUTHORITY
203 ARMSTRONG STREET
HALIFAX, PA 17032
(717) 896-8083

LOW PRESSURE SANITARY SEWER PLAN AND PROFILE
ROADCAP LANE
FOR
HALIFAX TWP. SANITARY SEWER EXTENSION PROJECT
HALIFAX TOWNSHIP DAUPHIN COUNTY PENNSYLVANIA

PROJ. MGR. – JJM	
DESIGN– MDC	
CADD– RSF/BAB	
CHECKED–MDC	
SCALE– AS NOTED	
DATE– AUG. 2022	

DRAWING NO.
PP-14
SHEET NO.
17 OF 109
PROJECT 001650.0428

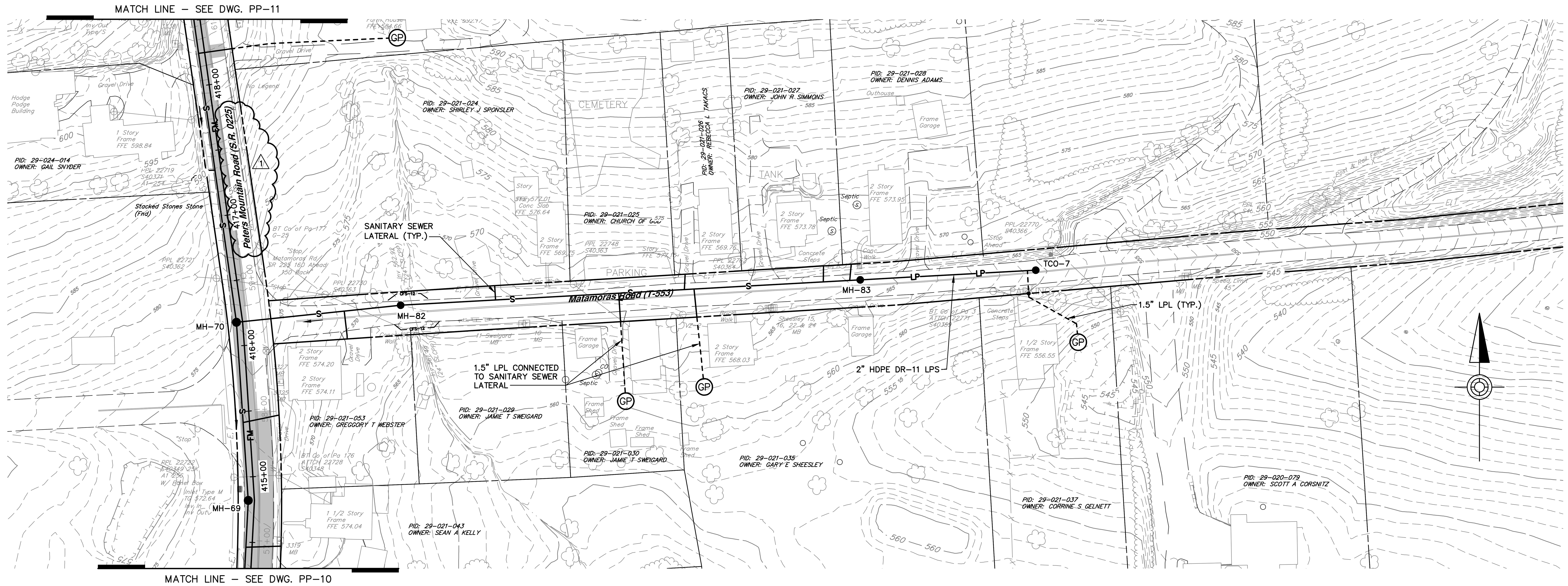

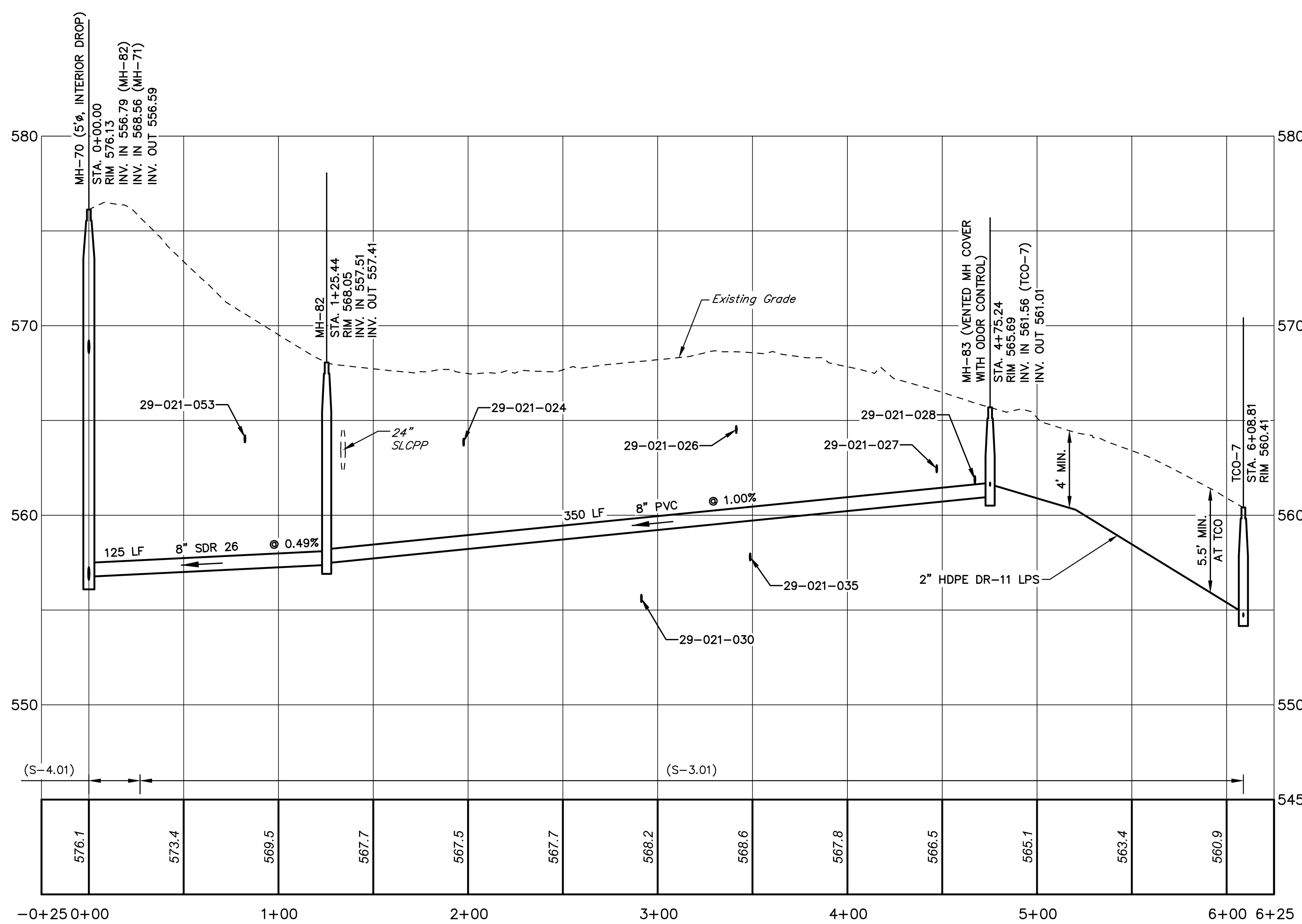

HORIZ: 50' 25' 0' 50'
VERT: 5' 2.5' 0' 5'
SCALE IN FEET

File name: P:\0016\001650_0428\C3D\Plan Sets\SAN\W0016500428-PP-LP.dwg Layout: MATAMORAS Oct 05, 2022-4:12pm sfocht

NO.	REVISION	DATE	BY
1	ADDENDUM NO. 2	10/5/22	RSF

COMMONWEALTH OF PENNSYLVANIA REGISTERED PROFESSIONAL MATTHEW DAVID CICHY ENGINEER PE074220

HRG
Herbert, Rowland & Grubic, Inc.
Engineering & Related Services
AN EMPLOYEE-OWNED COMPANY

369 East Park Drive
Harrisburg, PA 17111
(717) 564-1121
Fax (717) 564-1158
hrg@hrg-inc.com
www.hrg-inc.com

HALIFAX AREA
WATER AND SEWER AUTHORITY
203 ARMSTRONG STREET
HALIFAX, PA 17032
(717) 896-8083

LOW PRESSURE SANITARY SEWER PLAN AND PROFILE
MATAMORAS ROAD
FOR
HALIFAX TWP. SANITARY SEWER EXTENSION PROJECT

HALIFAX TOWNSHIP **DAUPHIN COUNTY** **PENNSYLVANIA**

PROJ. MGR. – JJM
DESIGN– MDC
CADD– RSF/BAB
CHECKED–MDC
SCALE– AS NOTED
DATE– AUG. 2022

DRAWING NO.
PP-15
SHEET NO.
18 OF 109
PROJECT 001650.0428

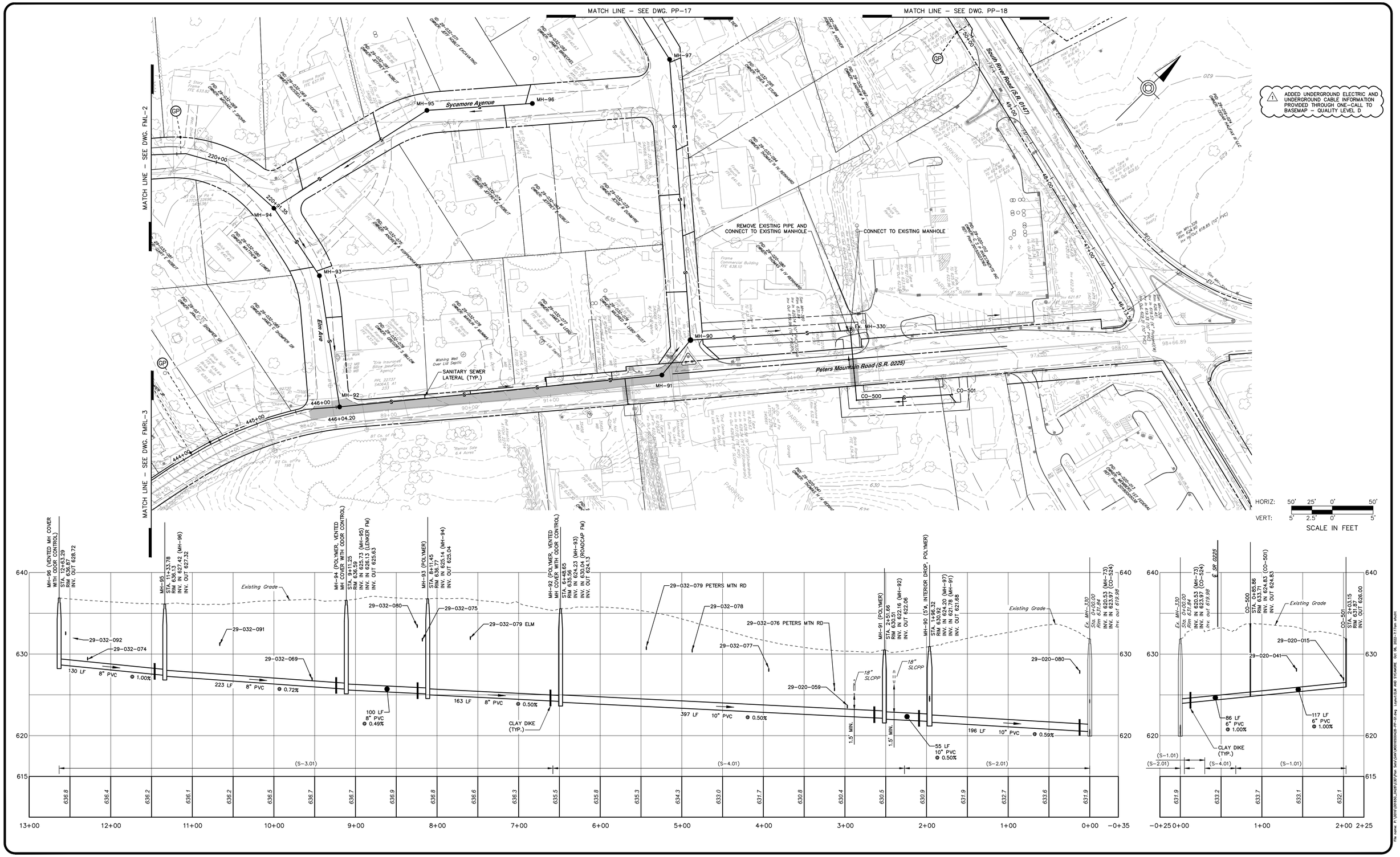

NO.	REVISION	DATE	BY
1	ADDENDUM NO. 2	10/5/22	RSF

COMMONWEALTH OF PENNSYLVANIA
REGISTERED PROFESSIONAL
MATTHEW DAVID CICHY
ENGINEER
PE074220

HRG
Herbert, Rowland & Grubic, Inc.
Engineering & Related Services
AN EMPLOYEE-OWNED COMPANY
369 East Park Drive
Harrisburg, PA 17111
(717) 564-1121
Fax (717) 564-1158
hrg@hrg-inc.com
www.hrg-inc.com

HALIFAX AREA
WATER AND SEWER AUTHORITY
203 ARMSTRONG STREET
HALIFAX, PA 17032
(717) 896-8083

SANITARY SEWER PLAN AND PROFILE
ELM AVENUE AND SYCAMORE AVENUE
FOR
HALIFAX TWP. SANITARY SEWER EXTENSION PROJECT
HALIFAX TOWNSHIP DAUPHIN COUNTY PENNSYLVANIA

PROJ. MGR. – JJM	
DESIGN– MDC	
CADD– RSF/BAB	
CHECKED–MDC	
SCALE– AS NOTED	
DATE– AUG. 2022	

DRAWING NO.
PP-16
SHEET NO.
19 OF 109
PROJECT 001650.0428

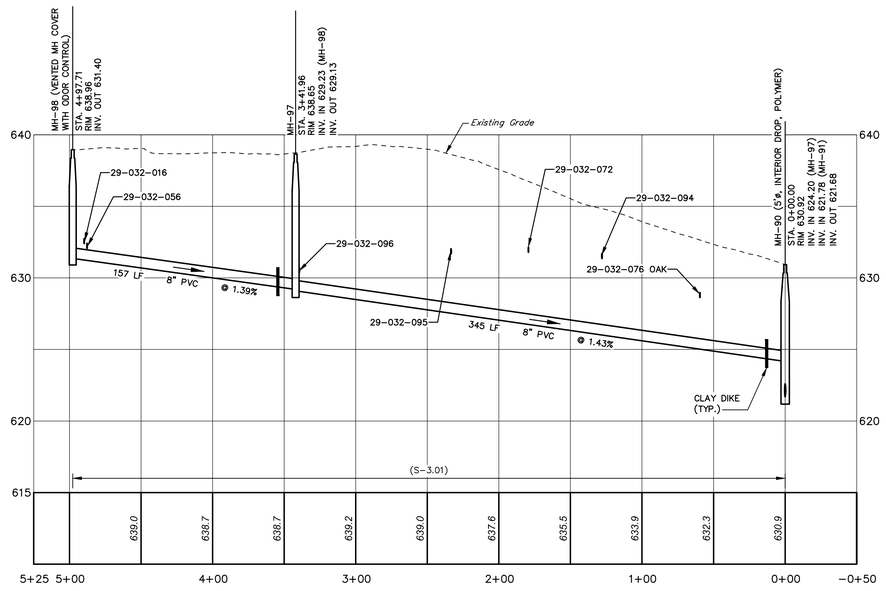

HORIZ: 50' 25' 0' 50'
VERT: 5' 2.5' 0' 5'
SCALE IN FEET

File name: P:\001\A\001650_0428\LDD\Proj Sht\LNW\001650428-PP-02.dwg Layout:SAVE Sep 02, 2022–10:50am ebbott

NO.	REVISION	DATE	BY

COMMONWEALTH OF PENNSYLVANIA — REGISTERED PROFESSIONAL — MATTHEW DAVID CICHY — ENGINEER — PE074220

HRG
Herbert, Rowland & Grubic, Inc.
Engineering & Related Services
AN EMPLOYEE-OWNED COMPANY
369 East Park Drive
Harrisburg, PA 17111
(717) 564-1121
Fax (717) 564-1158
hrg@hrg-inc.com
www.hrg-inc.com

HALIFAX AREA
WATER AND SEWER AUTHORITY
203 ARMSTRONG STREET
HALIFAX, PA 17032
(717) 896-8083

SANITARY SEWER PLAN AND PROFILE
OAK AVENUE
FOR
HALIFAX TWP. SANITARY SEWER EXTENSION PROJECT
HALIFAX TOWNSHIP DAUPHIN COUNTY PENNSYLVANIA

PROJ. MGR. –	JJM
DESIGN–	MDC
CADD–	RSF/BAB
CHECKED–	MDC
SCALE–	AS NOTED
DATE–	AUG. 2022

DRAWING NO. **PP-17**
SHEET NO. **20** OF **109**
PROJECT 001650.0428

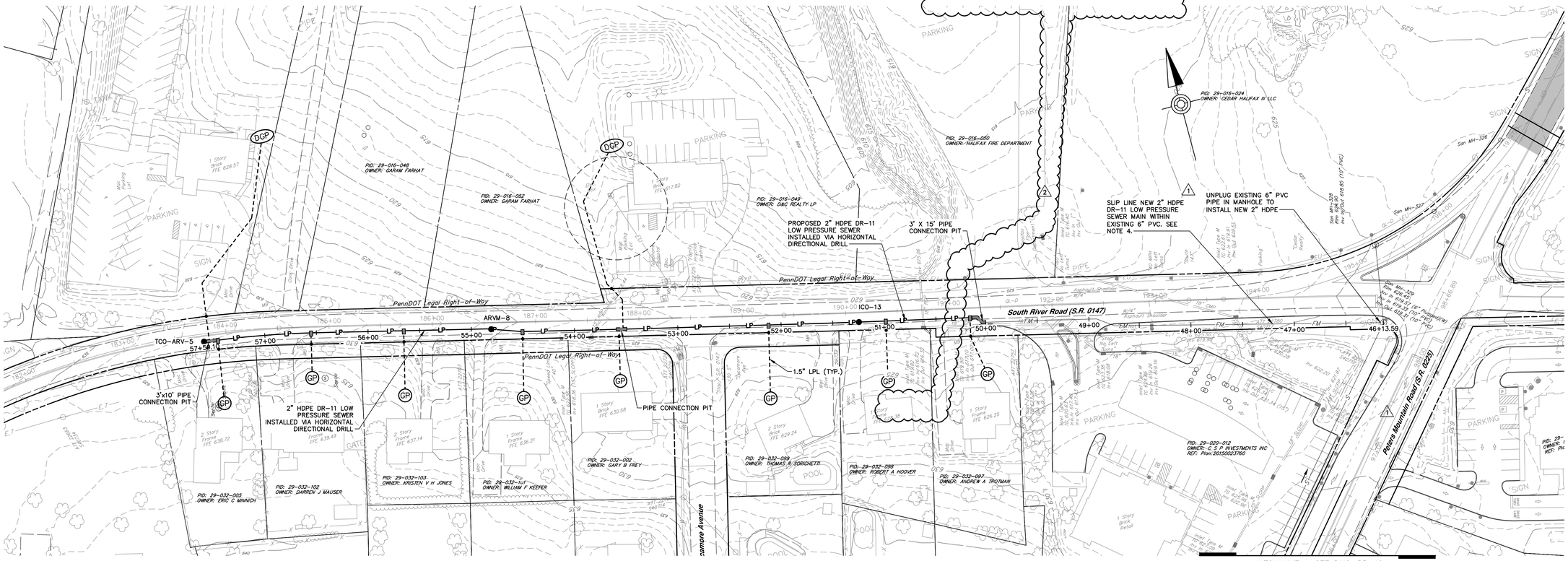

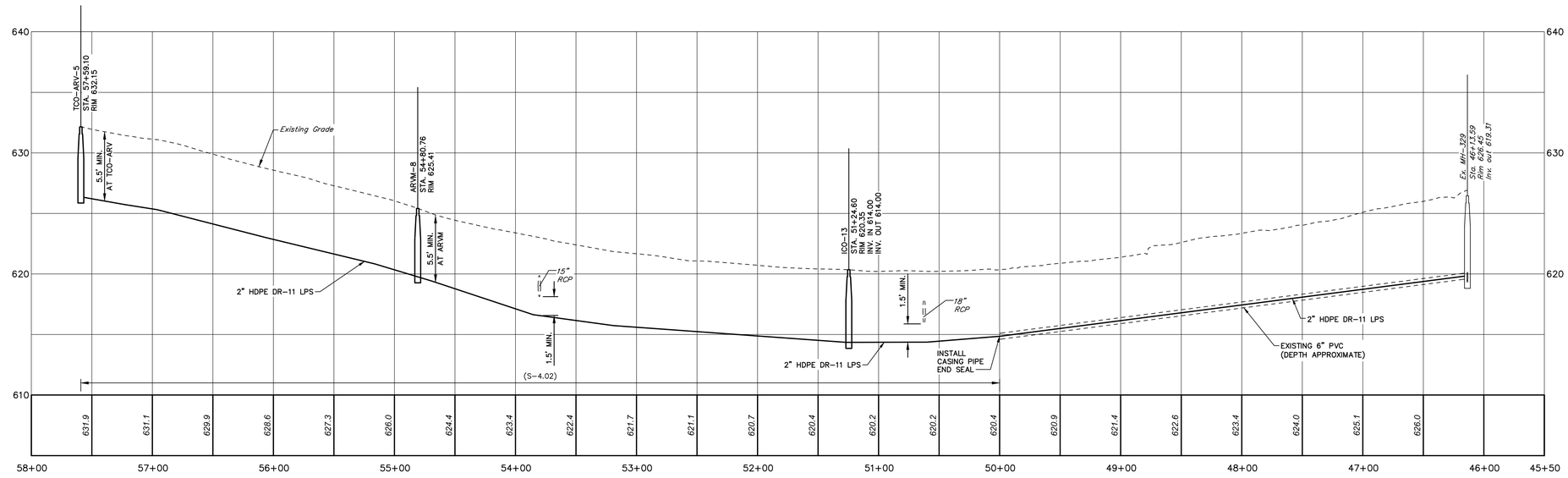

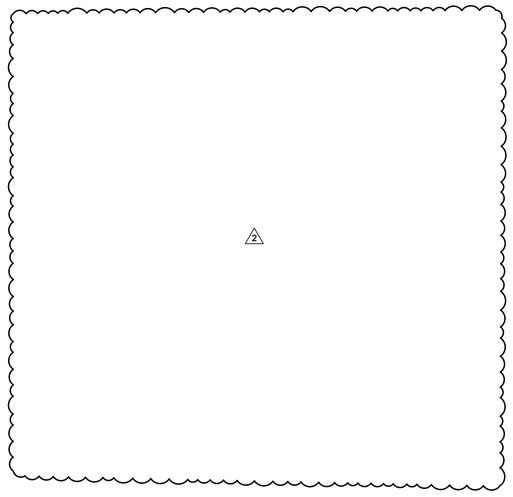

HORIZ: 50' 25' 0' 50'
VERT: 5' 2.5' 0' 5'
SCALE IN FEET

1 ADDED UNDERGROUND ELECTRIC AND UNDERGROUND CABLE INFORMATION PROVIDED THROUGH ONE-CALL TO BASEMAP – QUALITY LEVEL D

NOTES:
1. ALL LPS LATERALS TO BE INSTALLED ON THE SIDE OF THE ROAD CLOSEST TO THE LPS (SHORT SIDE) SHALL BE INSTALLED VIA TRENCHLESS METHOD. ALL LATERALS WILL REQUIRE POT HOLES FOR THE IDENTIFICATION AND DEPTH VERIFICATION OF CROSSED UTILITIES.
1 2. ALL LPS LATERALS TO BE INSTALLATION THE OPPOSITE SIDE OF THE ROAD FROM THE LPS (LONG SIDE) SHALL BE INSTALLED VIA TRENCHLESS METHOD. ALL LONG SIDE LATERAL INSTALLS WILL REQUIRE POT HOLES FOR THE IDENTIFICATION AND DEPTH VERIFICATION OF CROSSED UTILITIES.
3. ARVM-8 TEE INVERT TO BE LOCATED AT SAME ELEVATION AS 2" LOW PRESSURE SEWER MAIN DISCHARGE ELEVATION OF 619.57'.
1 4. EXISTING 6" PVC PIPE IS A DRY SEWER LINE THAT WAS PREVIOUSLY INSTALLED WHEN THE SHEETZ WAS CONSTRUCTED. CONTRACTOR SHALL FIELD LOCATE END OF EXISTING PIPE.

NO.	REVISION	DATE	BY
2	WCD-1	05/23/23	NS
1	ADDENDUM NO. 2	10/5/22	RSF

HRG
Herbert, Rowland & Grubic, Inc.
Engineering & Related Services
AN EMPLOYEE-OWNED COMPANY
369 East Park Drive
Harrisburg, PA 17111
(717) 564-1121
Fax (717) 564-1158
hrg@hrg-inc.com
www.hrg-inc.com

HALIFAX AREA
WATER AND SEWER AUTHORITY
203 ARMSTRONG STREET
HALIFAX, PA 17032
(717) 896-8083

LOW PRESSURE SANITARY SEWER PLAN AND PROFILE
SOUTH RIVER ROAD (S.R. 147)
FOR
HALIFAX TWP. SANITARY SEWER EXTENSION PROJECT

HALIFAX TOWNSHIP DAUPHIN COUNTY PENNSYLVANIA

PROJ. MGR. –	JJM
DESIGN–	MDC
CADD–	RSF/BAB
CHECKED–	MDC
SCALE–	AS NOTED
DATE–	AUG. 2022

DRAWING NO. **PP-18**
SHEET NO. 21 OF 109
PROJECT 001650.0428

File name: P:\001\A\001650_A\ACAD\Civil\Plan Sets\SAN\001650A428-PP-SP.dwg Layout:17 May 23, 2023-11:11am mcgonegal

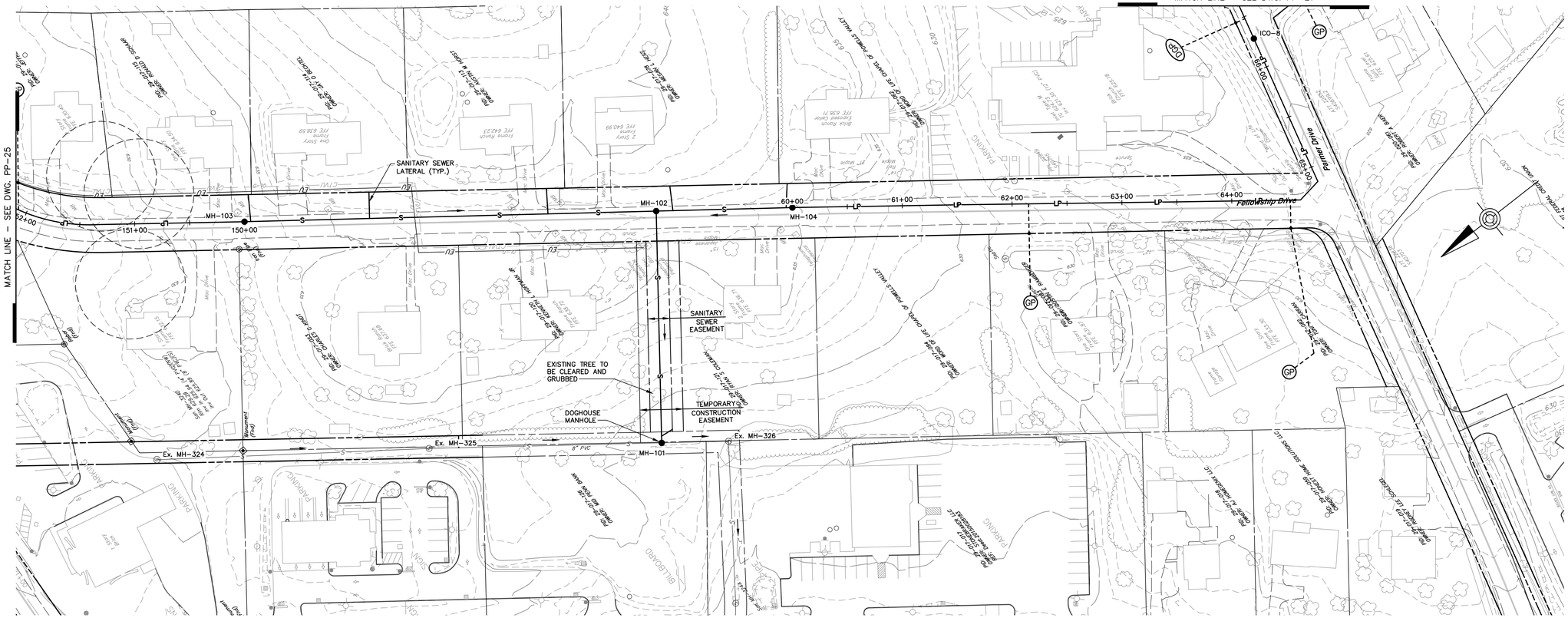

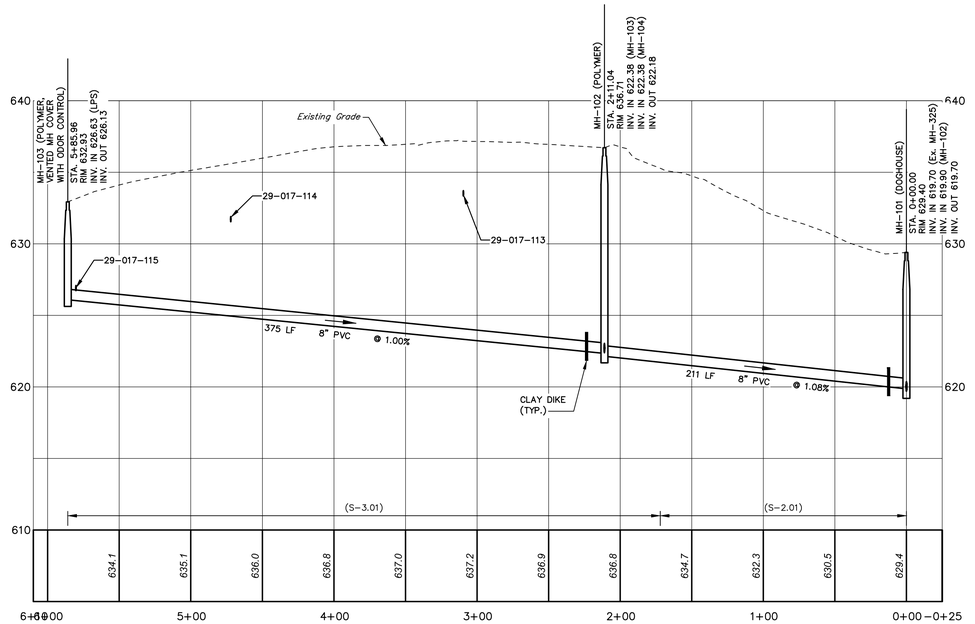

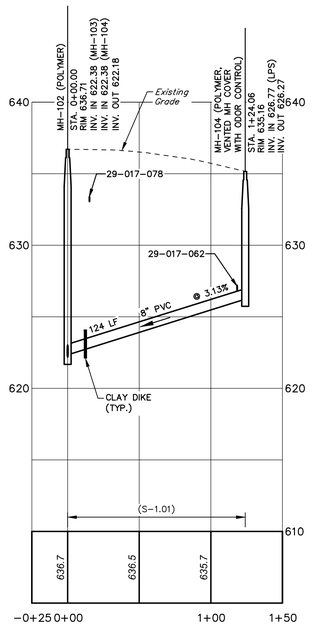

NO.	REVISION	DATE	BY
1	ADDENDUM NO. 2	10/5/22	RSF

COMMONWEALTH OF PENNSYLVANIA
REGISTERED PROFESSIONAL ENGINEER
MATTHEW DAVID CICHY
PE074220

HRG
Herbert, Rowland & Grubic, Inc.
Engineering & Related Services
AN EMPLOYEE-OWNED COMPANY
369 East Park Drive
Harrisburg, PA 17111
(717) 564-1121
Fax (717) 564-1158
hrg@hrg-inc.com
www.hrg-inc.com

HALIFAX AREA WATER AND SEWER AUTHORITY
203 ARMSTRONG STREET
HALIFAX, PA 17032
(717) 896-8083

SANITARY SEWER PLAN AND PROFILE
FELLOWSHIP DRIVE
FOR
HALIFAX TWP. SANITARY SEWER EXTENSION PROJECT

HALIFAX TOWNSHIP DAUPHIN COUNTY PENNSYLVANIA

PROJ. MGR. –	JJM
DESIGN–	MDC
CADD–	RSF/BAB
CHECKED–	MDC
SCALE–	AS NOTED
DATE–	AUG. 2022

DRAWING NO.
PP-19
SHEET NO.
22 OF 109
PROJECT 001650.0428

File name: P:\2016\001650_SAN\CAD\PP0001650428-PP-19.dwg Layout:TELLSHEET Oct 06, 2022 - 7:19am rsharf

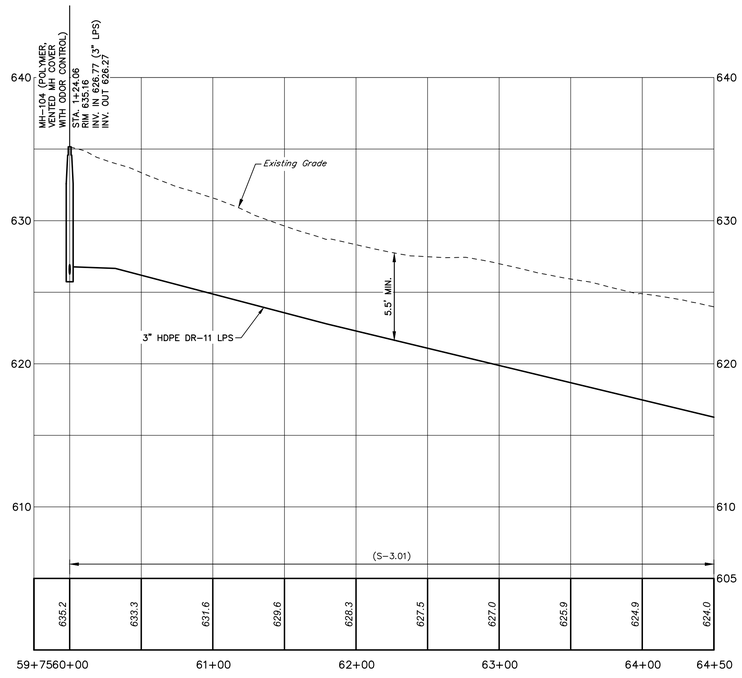

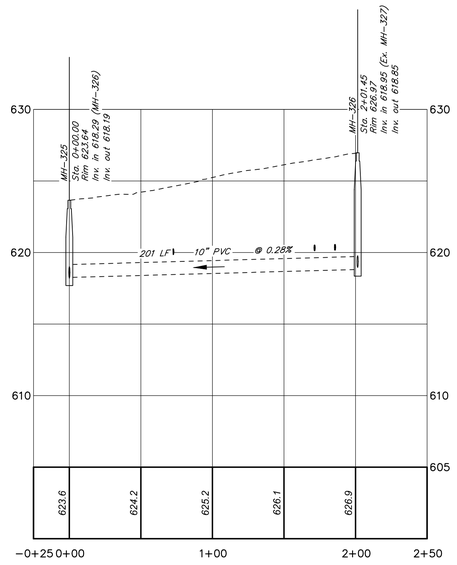

1 ADDED UNDERGROUND ELECTRIC AND UNDERGROUND CABLE INFORMATION
2 PROVIDED THROUGH ONE-CALL TO BASEMAP – QUALITY LEVEL D

HORIZ: 50' 25' 0' 50'
VERT: 5' 2.5' 0' 5'
SCALE IN FEET

NO.	REVISION	DATE	BY
3	ADDENDUM NO. 3	10/11/22	RSF
2	ADDENDUM NO. 2	10/5/22	RSF
1	ADDENDUM NO. 1	9/23/22	RSF

COMMONWEALTH OF PENNSYLVANIA
REGISTERED PROFESSIONAL
MATTHEW DAVID CICHY
ENGINEER
PE074220

HRG
Herbert, Rowland & Grubic, Inc.
Engineering & Related Services
AN EMPLOYEE-OWNED COMPANY
369 East Park Drive
Harrisburg, PA 17111
(717) 564-1121
Fax (717) 564-1158
hrg@hrg-inc.com
www.hrg-inc.com

HALIFAX AREA
WATER AND SEWER AUTHORITY
203 ARMSTRONG STREET
HALIFAX, PA 17032
(717) 896-8083

LOW PRESSURE SANITARY SEWER PLAN AND PROFILE
FELLOWSHIP DRIVE
FOR
HALIFAX TWP. SANITARY SEWER EXTENSION PROJECT
HALIFAX TOWNSHIP DAUPHIN COUNTY PENNSYLVANIA

PROJ. MGR. – JJM
DESIGN– MDC
CADD– RSF/BAB
CHECKED–MDC
SCALE– AS NOTED
DATE– AUG. 2022

DRAWING NO.
PP-20
SHEET NO.
23 OF 109
PROJECT 001650.0428

MATCH LINE – SEE DWG. PP-20

MATCH LINE – SEE DWG. PP-23

MATCH LINE – SEE DWG. PP-22

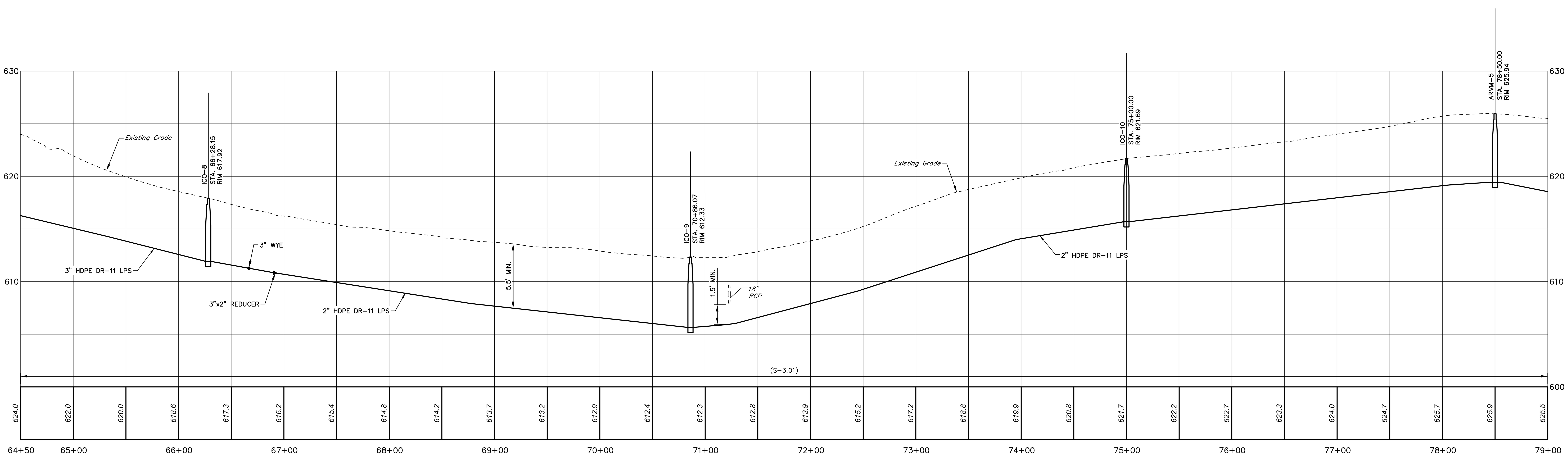

1 — ADDED UNDERGROUND ELECTRIC AND UNDERGROUND CABLE INFORMATION PROVIDED THROUGH ONE-CALL TO BASEMAP – QUALITY LEVEL D

HORIZ: 50' 25' 0' 50'
VERT: 5' 2.5' 0' 5'
SCALE IN FEET

File name: P:\0016\001650_0428\C3D\Plan Sets\SAN\W0016500428-PP-LP.dwg Layout: PARMER 1 Oct 05, 2022-4:16pm sfocht

NO.	REVISION	DATE	BY
1	ADDENDUM NO. 2	10/5/22	RSF

COMMONWEALTH OF PENNSYLVANIA — REGISTERED PROFESSIONAL — MATTHEW DAVID CICHY — ENGINEER — PE074220

HRG
Herbert, Rowland & Grubic, Inc.
Engineering & Related Services
AN EMPLOYEE-OWNED COMPANY
369 East Park Drive
Harrisburg, PA 17111
(717) 564-1121
Fax (717) 564-1158
hrg@hrg-inc.com
www.hrg-inc.com

HALIFAX AREA
WATER AND SEWER AUTHORITY
203 ARMSTRONG STREET
HALIFAX, PA 17032
(717) 896-8083

LOW PRESSURE SANITARY SEWER PLAN AND PROFILE
PARMER DRIVE
FOR
HALIFAX TWP. SANITARY SEWER EXTENSION PROJECT
HALIFAX TOWNSHIP **DAUPHIN COUNTY** **PENNSYLVANIA**

PROJ. MGR. – JJM
DESIGN– MDC
CADD– RSF/BAB
CHECKED–MDC
SCALE– AS NOTED
DATE– AUG. 2022

DRAWING NO.
PP-21
SHEET NO.
24 OF **109**
PROJECT 001650.0428

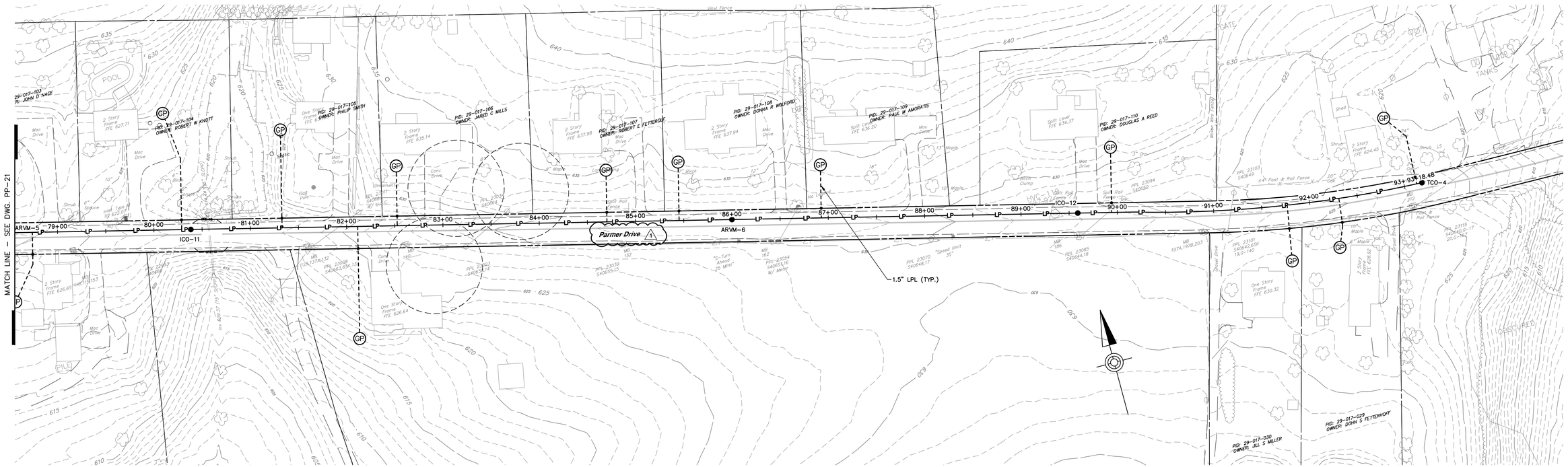

NO.	REVISION	DATE	BY
1	ADDENDUM NO. 2	10/5/22	RSF

COMMONWEALTH OF PENNSYLVANIA
REGISTERED PROFESSIONAL
MATTHEW DAVID CICHY
ENGINEER
PE074220

HRG
Herbert, Rowland & Grubic, Inc.
Engineering & Related Services
AN EMPLOYEE-OWNED COMPANY
369 East Park Drive
Harrisburg, PA 17111
(717) 564-1121
Fax (717) 564-1158
hrg@hrg-inc.com
www.hrg-inc.com

HALIFAX AREA
WATER AND SEWER AUTHORITY
203 ARMSTRONG STREET
HALIFAX, PA 17032
(717) 896-8083

LOW PRESSURE SANITARY SEWER PLAN AND PROFILE
PARMER DRIVE
FOR
HALIFAX TWP. SANITARY SEWER EXTENSION PROJECT
HALIFAX TOWNSHIP DAUPHIN COUNTY PENNSYLVANIA

PROJ. MGR. – JJM	
DESIGN–	MDC
CADD–	RSF/BAB
CHECKED–	MDC
SCALE–	AS NOTED
DATE–	AUG. 2022

DRAWING NO.
PP-22
SHEET NO.
25 OF 109
PROJECT 001650.0428

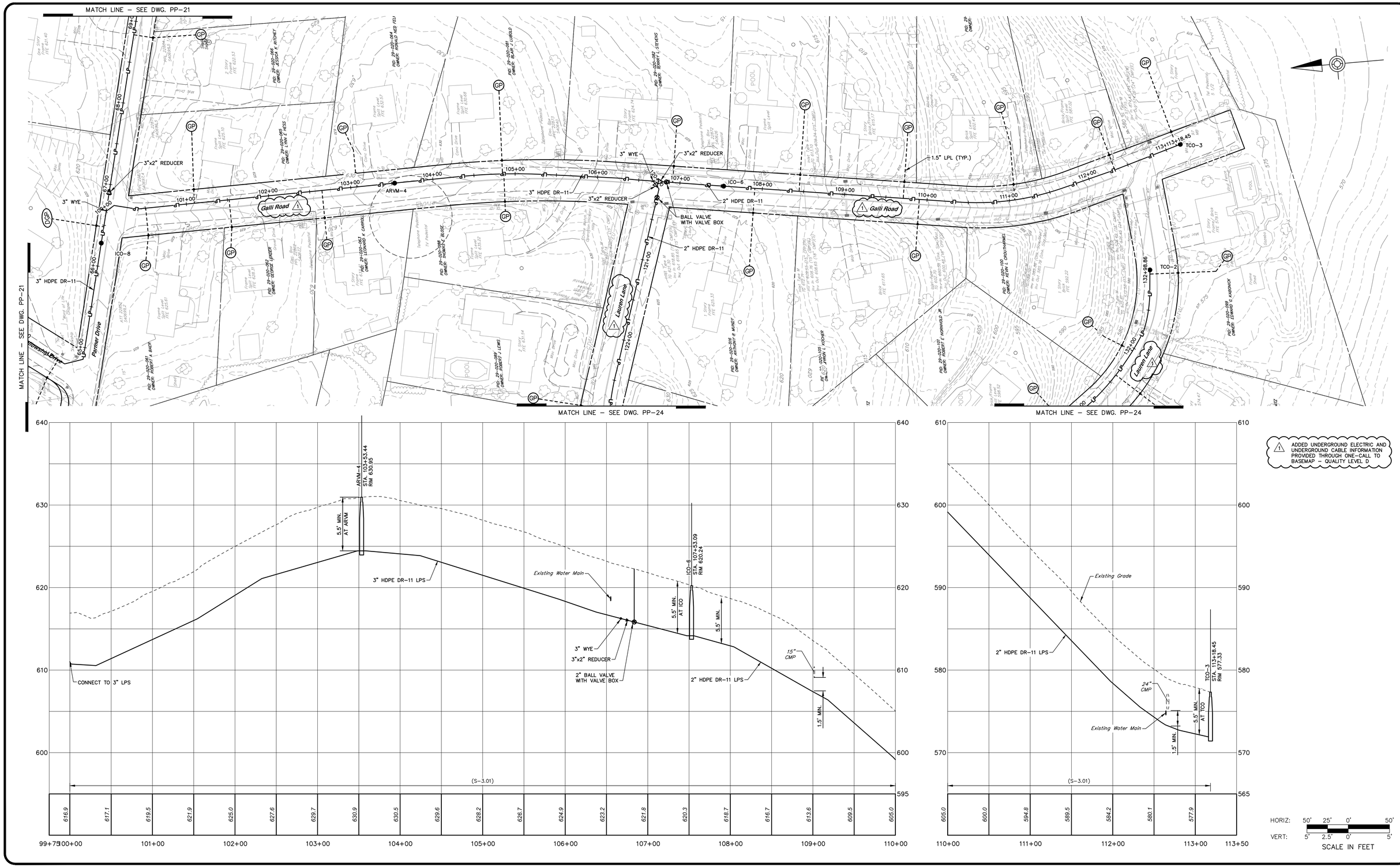

NO.	REVISION	DATE	BY
1	ADDENDUM NO. 2	10/5/22	RSF

COMMONWEALTH OF PENNSYLVANIA
REGISTERED PROFESSIONAL
MATTHEW DAVID CICHY
ENGINEER
PE074220

HRG
Herbert, Rowland & Grubic, Inc.
Engineering & Related Services
AN EMPLOYEE-OWNED COMPANY
369 East Park Drive
Harrisburg, PA 17111
(717) 564-1121
Fax (717) 564-1158
hrg@hrg-inc.com
www.hrg-inc.com

HALIFAX AREA
WATER AND SEWER AUTHORITY
203 ARMSTRONG STREET
HALIFAX, PA 17032
(717) 896-8083

LOW PRESSURE SANITARY SEWER PLAN AND PROFILE
GALLI ROAD
FOR
HALIFAX TWP. SANITARY SEWER EXTENSION PROJECT

HALIFAX TOWNSHIP DAUPHIN COUNTY PENNSYLVANIA

PROJ. MGR. – JJM	
DESIGN–	MDC
CADD–	RSF/BAB
CHECKED–	MDC
SCALE–	AS NOTED
DATE–	AUG. 2022

DRAWING NO.
PP-23
SHEET NO.
26 OF 109
PROJECT 001650.0428

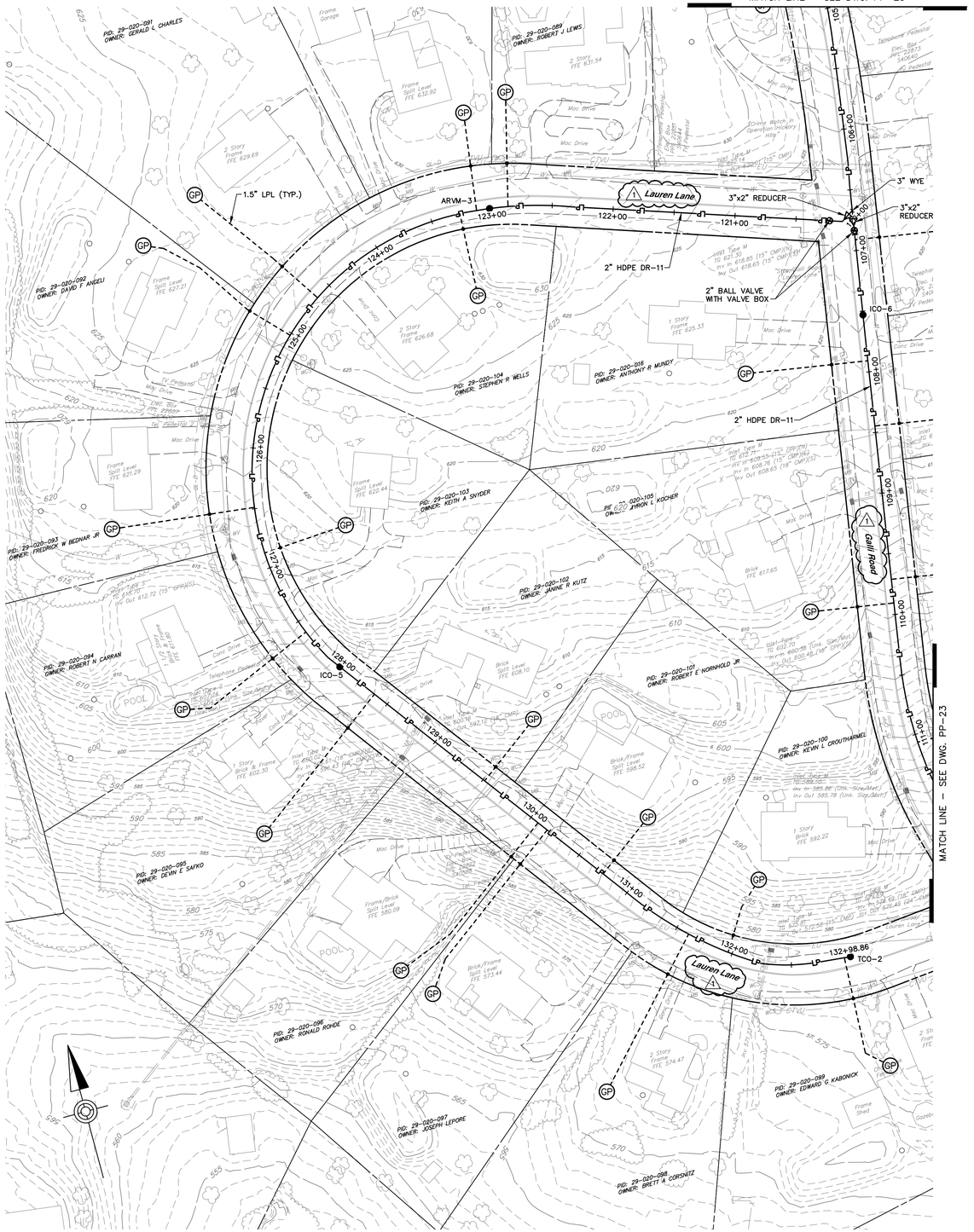

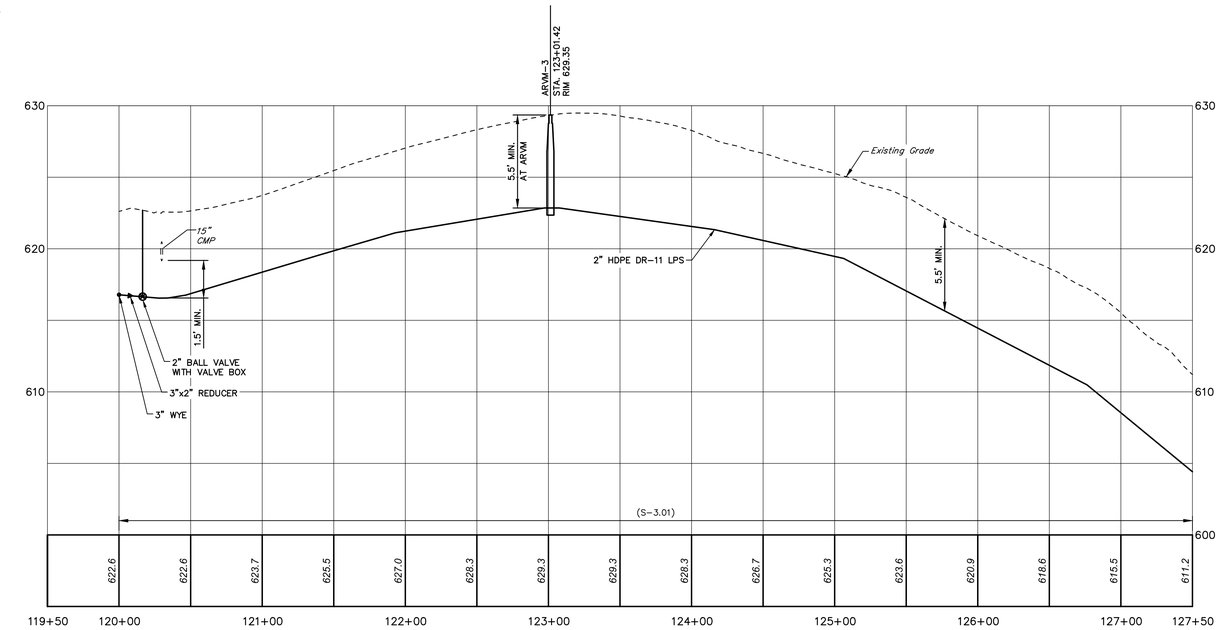

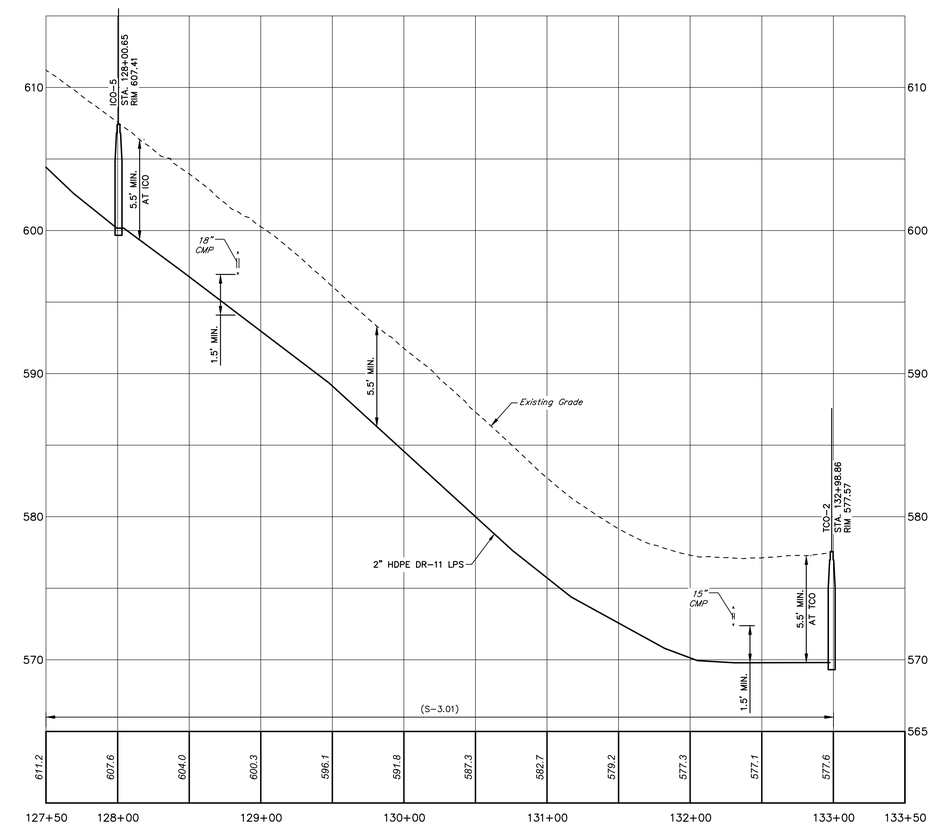

1 ADDED UNDERGROUND ELECTRIC AND UNDERGROUND CABLE INFORMATION PROVIDED THROUGH ONE-CALL TO BASEMAP – QUALITY LEVEL D

HORIZ: 50' 25' 0' 50'
VERT: 5' 2.5' 0' 5'
SCALE IN FEET

NO.	REVISION	DATE	BY
1	ADDENDUM NO. 2	10/5/22	RSF

COMMONWEALTH OF PENNSYLVANIA
REGISTERED PROFESSIONAL
MATTHEW DAVID CICHY
ENGINEER
PE074220

HRG
Herbert, Rowland & Grubic, Inc.
Engineering & Related Services
AN EMPLOYEE-OWNED COMPANY
369 East Park Drive
Harrisburg, PA 17111
(717) 564-1121
Fax (717) 564-1158
hrg@hrg-inc.com
www.hrg-inc.com

HALIFAX AREA
WATER AND SEWER AUTHORITY
203 ARMSTRONG STREET
HALIFAX, PA 17032
(717) 896-8083

LOW PRESSURE SANITARY SEWER PLAN AND PROFILE
LAUREN LANE
FOR
HALIFAX TWP. SANITARY SEWER EXTENSION PROJECT

HALIFAX TOWNSHIP DAUPHIN COUNTY PENNSYLVANIA

PROJ. MGR. – JJM	
DESIGN–	MDC
CADD–	RSF/BAB
CHECKED–	MDC
SCALE–	AS NOTED
DATE–	AUG. 2022

DRAWING NO.
PP-24
SHEET NO.
27 OF 109
PROJECT 001650.0428

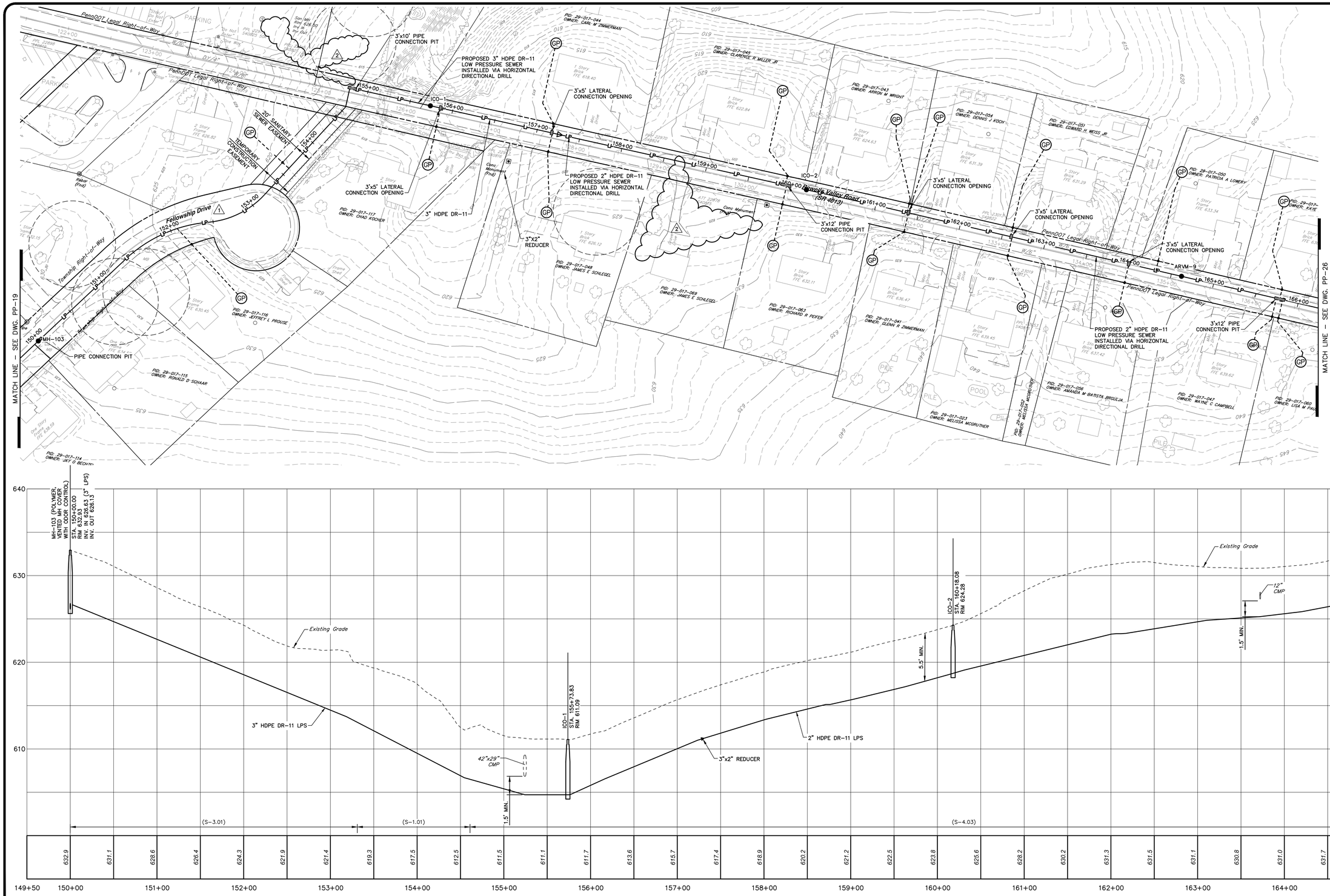

NO.	REVISION	DATE	BY
2	WCD-1	05/23/23	NS
1	ADDENDUM NO. 2	10/5/22	RSF

HRG
Herbert, Rowland & Grubic, Inc.
Engineering & Related Services
AN EMPLOYEE-OWNED COMPANY

369 East Park Drive
Harrisburg, PA 17111
(717) 564-1121
Fax (717) 564-1158
hrg@hrg-inc.com
www.hrg-inc.com

HALIFAX AREA
WATER AND SEWER AUTHORITY
203 ARMSTRONG STREET
HALIFAX, PA 17032
(717) 896-8083

LOW PRESSURE SANITARY SEWER PLAN AND PROFILE
POWELLS VALLEY ROAD
FOR
HALIFAX TWP. SANITARY SEWER EXTENSION PROJECT

HALIFAX TOWNSHIP **DAUPHIN COUNTY** **PENNSYLVANIA**

PROJ. MGR. –	JJM
DESIGN–	MDC
CADD–	RSF/BAB
CHECKED–	MDC
SCALE–	AS NOTED
DATE–	AUG. 2022

DRAWING NO.
PP-25
SHEET NO.
28 OF 109
PROJECT 001650.0428

File name: P:\2016\001650.2428\CSD\Plan Sets\SAN\W001650428-PP-LP.dwg Layout:POWELLS VALLEY 1 May 25, 2023-11:16am mspinnati

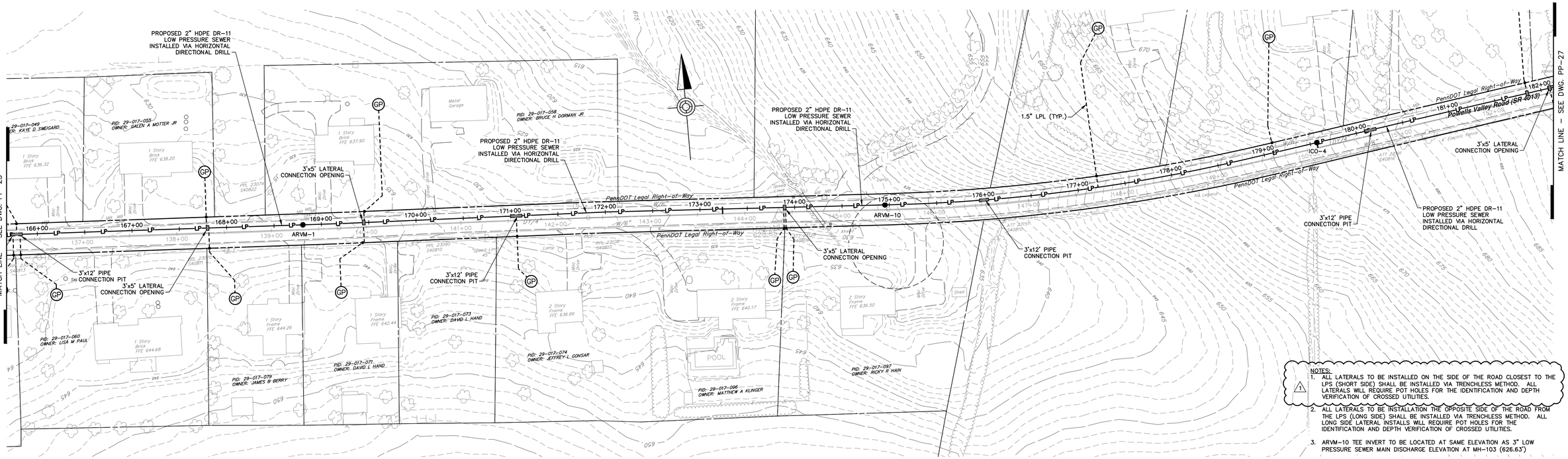

NOTES:

1. ALL LATERALS TO BE INSTALLED ON THE SIDE OF THE ROAD CLOSEST TO THE LPS (SHORT SIDE) SHALL BE INSTALLED VIA TRENCHLESS METHOD. ALL LATERALS WILL REQUIRE POT HOLES FOR THE IDENTIFICATION AND DEPTH VERIFICATION OF CROSSED UTILITIES.
2. ALL LATERALS TO BE INSTALLATION THE OPPOSITE SIDE OF THE ROAD FROM THE LPS (LONG SIDE) SHALL BE INSTALLED VIA TRENCHLESS METHOD. ALL LONG SIDE LATERAL INSTALLS WILL REQUIRE POT HOLES FOR THE IDENTIFICATION AND DEPTH VERIFICATION OF CROSSED UTILITIES.
3. ARVM-10 TEE INVERT TO BE LOCATED AT SAME ELEVATION AS 3" LOW PRESSURE SEWER MAIN DISCHARGE ELEVATION AT MH-103 (626.63')

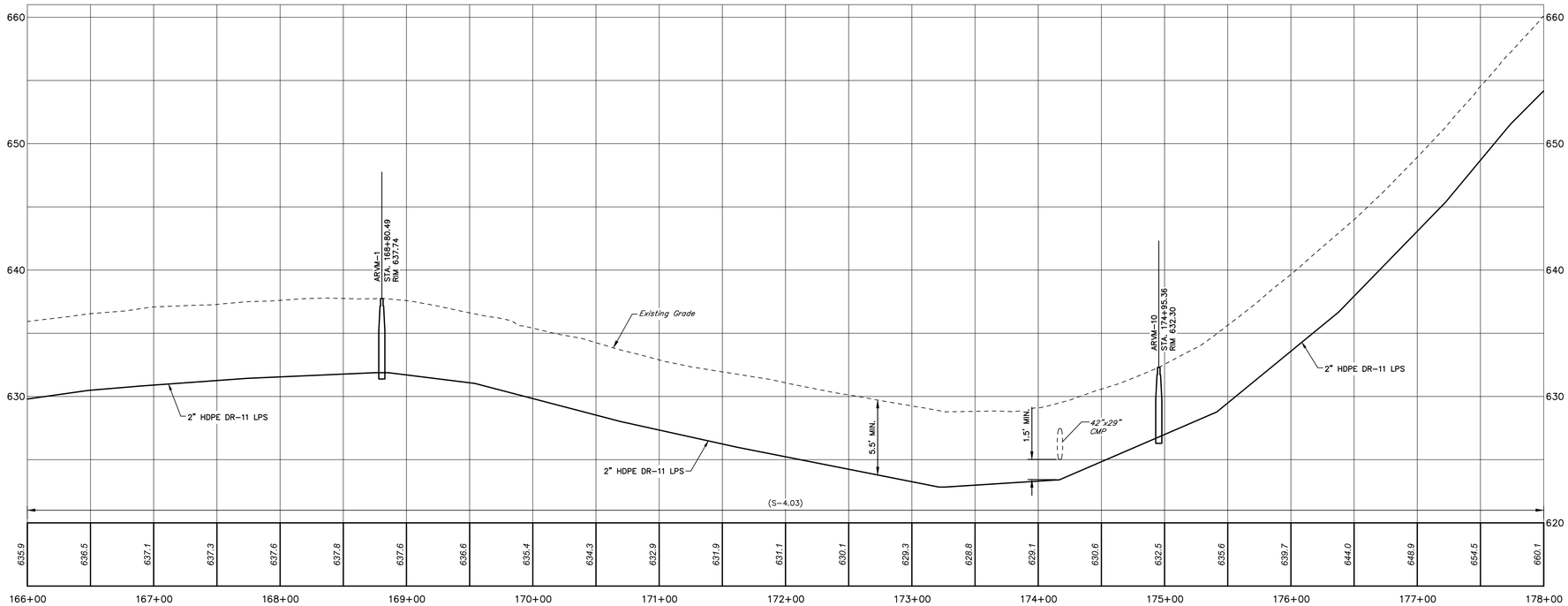

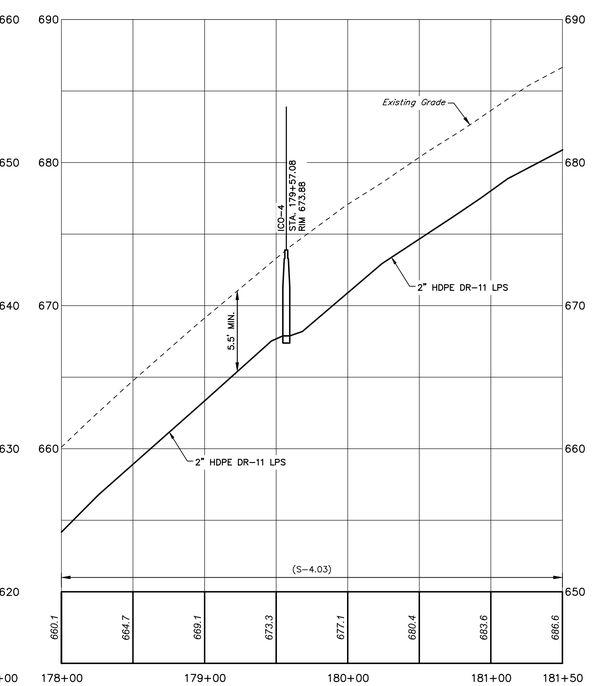

HORIZ: 50' 25' 0' 50'
VERT: 5' 2.5' 0' 5'
SCALE IN FEET

NO.	REVISION	DATE	BY
1	ADDENDUMNO. 2	10/5/22	RSF

COMMONWEALTH OF PENNSYLVANIA
REGISTERED PROFESSIONAL
MATTHEW DAVID CICHY
ENGINEER
PE074220

HRG
Herbert, Rowland & Grubic, Inc.
Engineering & Related Services
AN EMPLOYEE-OWNED COMPANY
369 East Park Drive
Harrisburg, PA 17111
(717) 564-1121
Fax (717) 564-1158
hrg@hrg-inc.com
www.hrg-inc.com

HALIFAX AREA
WATER AND SEWER AUTHORITY
203 ARMSTRONG STREET
HALIFAX, PA 17032
(717) 896-8083

LOW PRESSURE SANITARY SEWER PLAN AND PROFILE
POWELLS VALLEY ROAD
FOR
HALIFAX TWP. SANITARY SEWER EXTENSION PROJECT

HALIFAX TOWNSHIP DAUPHIN COUNTY PENNSYLVANIA

PROJ. MGR.	JJM
DESIGN	MDC
CADD	RSF/BAB
CHECKED	MDC
SCALE	AS NOTED
DATE	AUG. 2022

DRAWING NO.
PP-26
SHEET NO.
29 OF 109
PROJECT 001650.0428

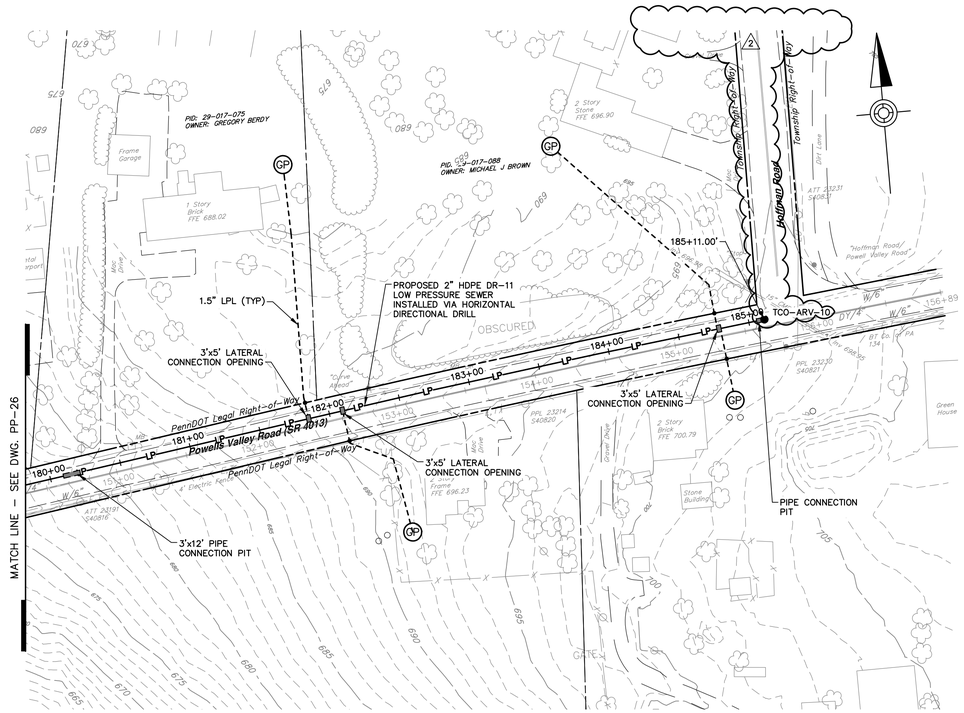

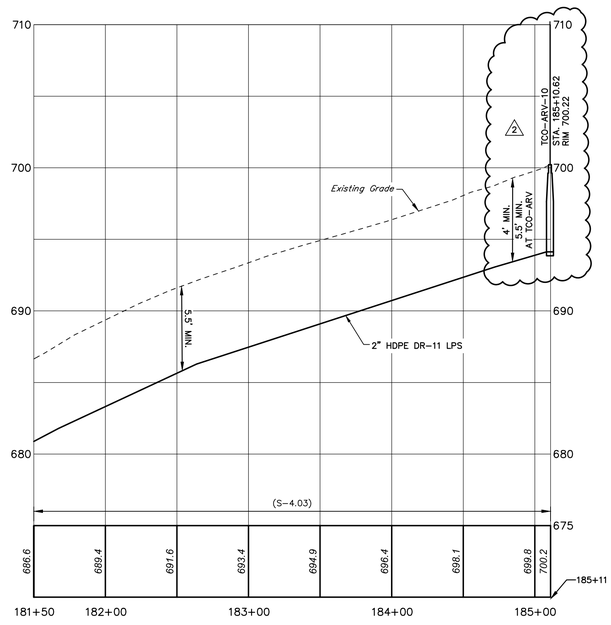

NOTES:

1. ALL LATERALS TO BE INSTALLED ON THE SIDE OF THE ROAD CLOSEST TO THE LPS (SHORT SIDE) SHALL BE INSTALLED VIA TRENCHLESS METHOD. ALL LATERALS WILL REQUIRE POT HOLES FOR THE INDENTIFICATION AND DEPTH VERIFICATION OF CROSSED UTILITIES.
2. ALL LATERALS TO BE INSTALLATION THE OPPOSITE SIDE OF THE ROAD FROM THE LPS (LONG SIDE) SHALL BE INSTALLED VIA TRENCHLESS METHOD. ALL LONG SIDE LATERAL INSTALLS WILL REQUIRE POT HOLES FOR THE IDENTIFICATION AND DEPTH VERIFICATION OF CROSSED UTILITIES.

HORIZ: 50' 25' 0' 50'
VERT: 5' 2.5' 0' 5'
SCALE IN FEET

NO.	REVISION	DATE	BY
2	WCD-1	05/23/23	NS
1	ADDENDUM NO. 2	10/5/22	RSF

HRG
Herbert, Rowland & Grubic, Inc.
Engineering & Related Services
AN EMPLOYEE-OWNED COMPANY
369 East Park Drive
Harrisburg, PA 17111
(717) 564-1121
Fax (717) 564-1158
hrg@hrg-inc.com
www.hrg-inc.com

HALIFAX AREA
WATER AND SEWER AUTHORITY
203 ARMSTRONG STREET
HALIFAX, PA 17032
(717) 896-8083

LOW PRESSURE SANITARY SEWER PLAN AND PROFILE
POWELLS VALLEY ROAD
FOR
HALIFAX TWP. SANITARY SEWER EXTENSION PROJECT
HALIFAX TOWNSHIP DAUPHIN COUNTY PENNSYLVANIA

PROJ. MGR. – JJM
DESIGN– MDC
CADD– RSF/BAB
CHECKED–MDC
SCALE– AS NOTED
DATE– AUG. 2022

DRAWING NO.
PP-27
SHEET NO.
30 OF 109
PROJECT 001650.0428

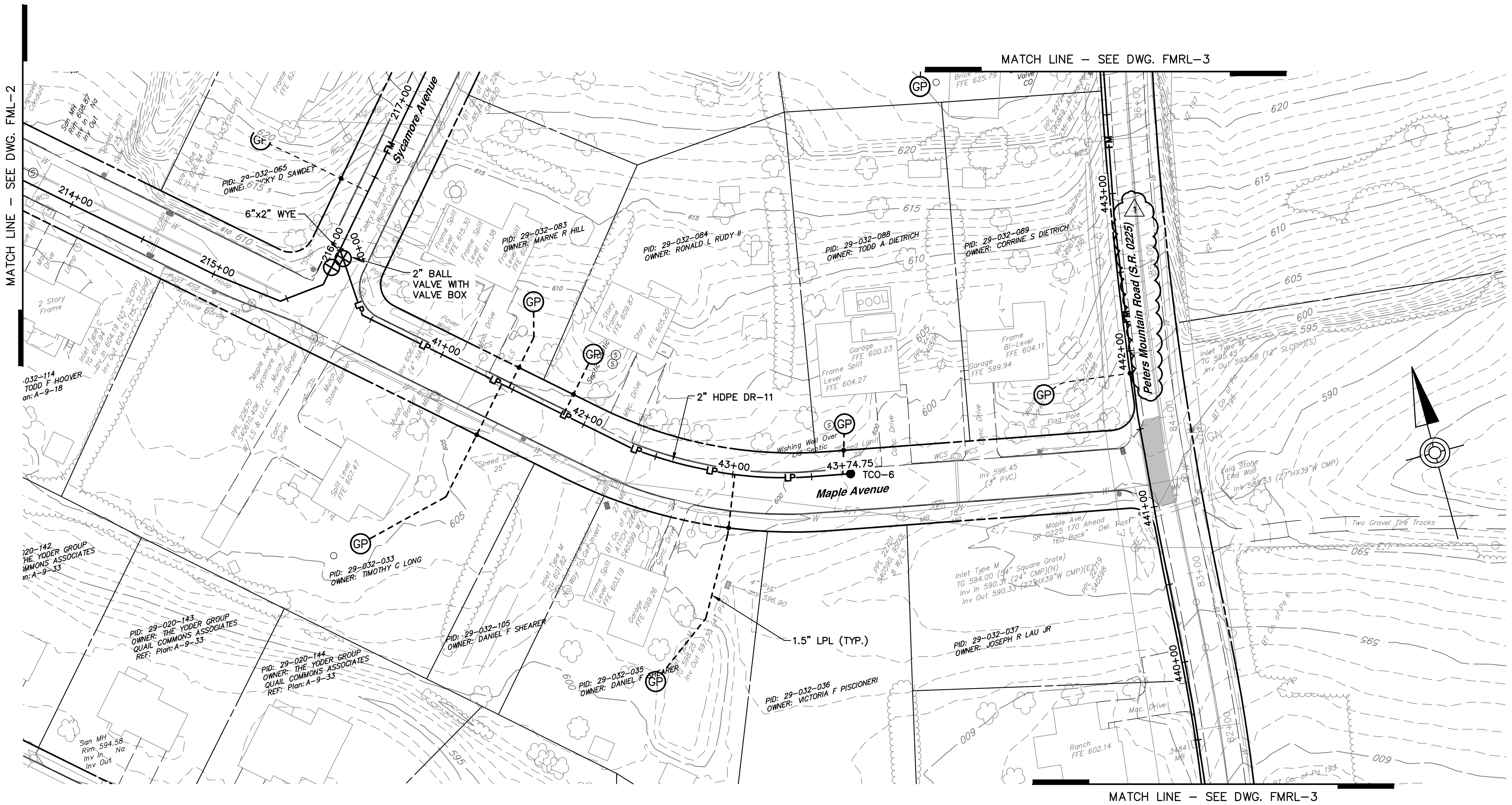

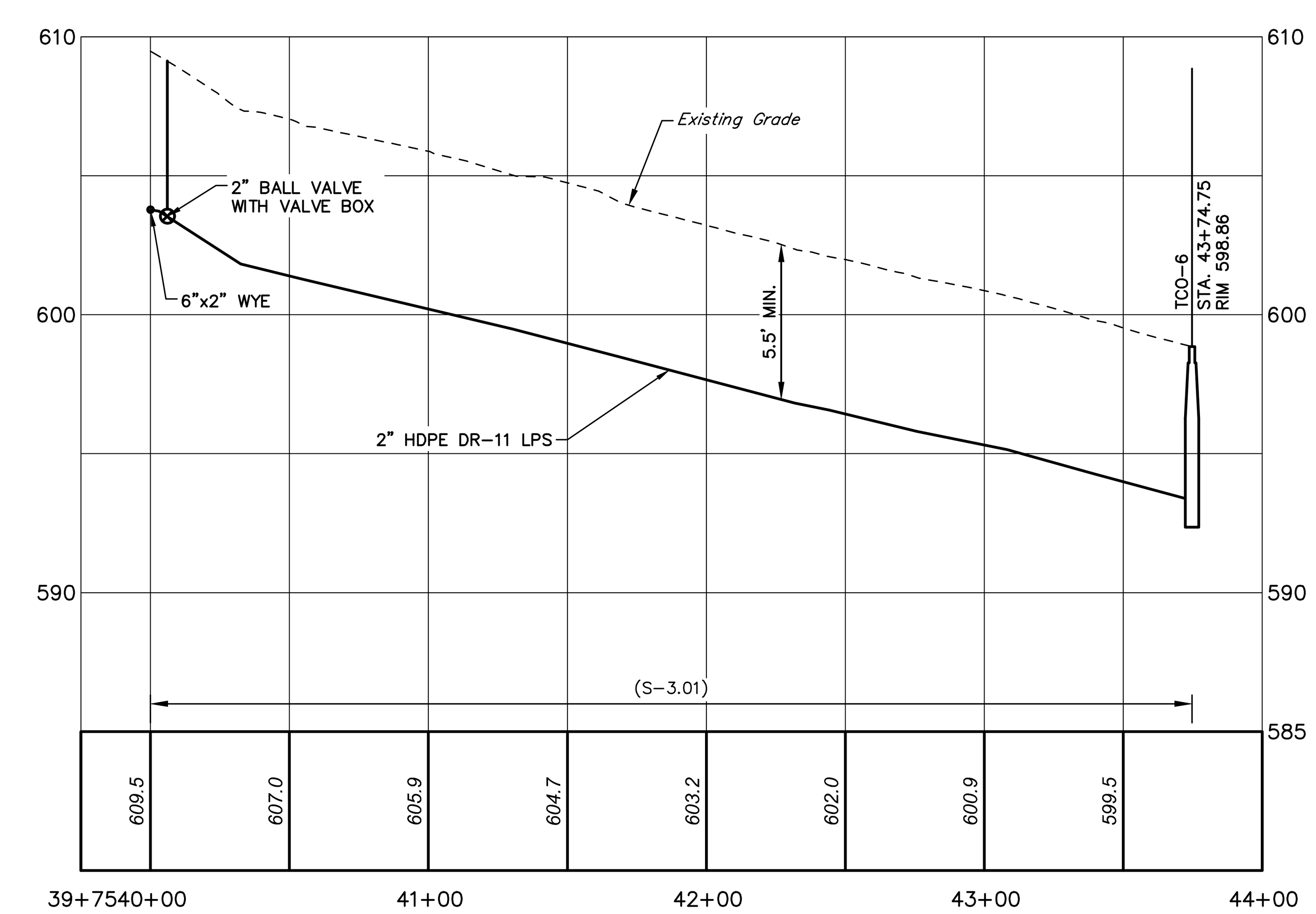

HORIZ: 50' 25' 0' 50'
VERT: 5' 2.5' 0' 5'
SCALE IN FEET

NO.	REVISION	DATE	BY
1	ADDENDUM NO. 2	10/5/22	RSF

COMMONWEALTH OF PENNSYLVANIA REGISTERED PROFESSIONAL MATTHEW DAVID CICHY ENGINEER PE074220

HRG Herbert, Rowland & Grubic, Inc. Engineering & Related Services AN EMPLOYEE-OWNED COMPANY

369 East Park Drive
Harrisburg, PA 17111
(717) 564-1121
Fax (717) 564-1158
hrg@hrg-inc.com
www.hrg-inc.com

HALIFAX AREA
WATER AND SEWER AUTHORITY
203 ARMSTRONG STREET
HALIFAX, PA 17032
(717) 896-8083

LOW PRESSURE SANITARY SEWER PLAN AND PROFILE
MAPLE AVENUE
FOR
HALIFAX TWP. SANITARY SEWER EXTENSION PROJECT
HALIFAX TOWNSHIP DAUPHIN COUNTY PENNSYLVANIA

PROJ. MGR. – JJM
DESIGN– MDC
CADD– RSF/BAB
CHECKED–MDC
SCALE– AS NOTED
DATE– AUG. 2022

DRAWING NO.
PP-28
SHEET NO.
31 OF **109**
PROJECT 001650.0428

File name: P:\0016\001650_0428\C3D\Plan Sets\SAN\W0016500428-PP-LP.dwg Layout:MAPLE Oct 05, 2022-4:25pm sfocht

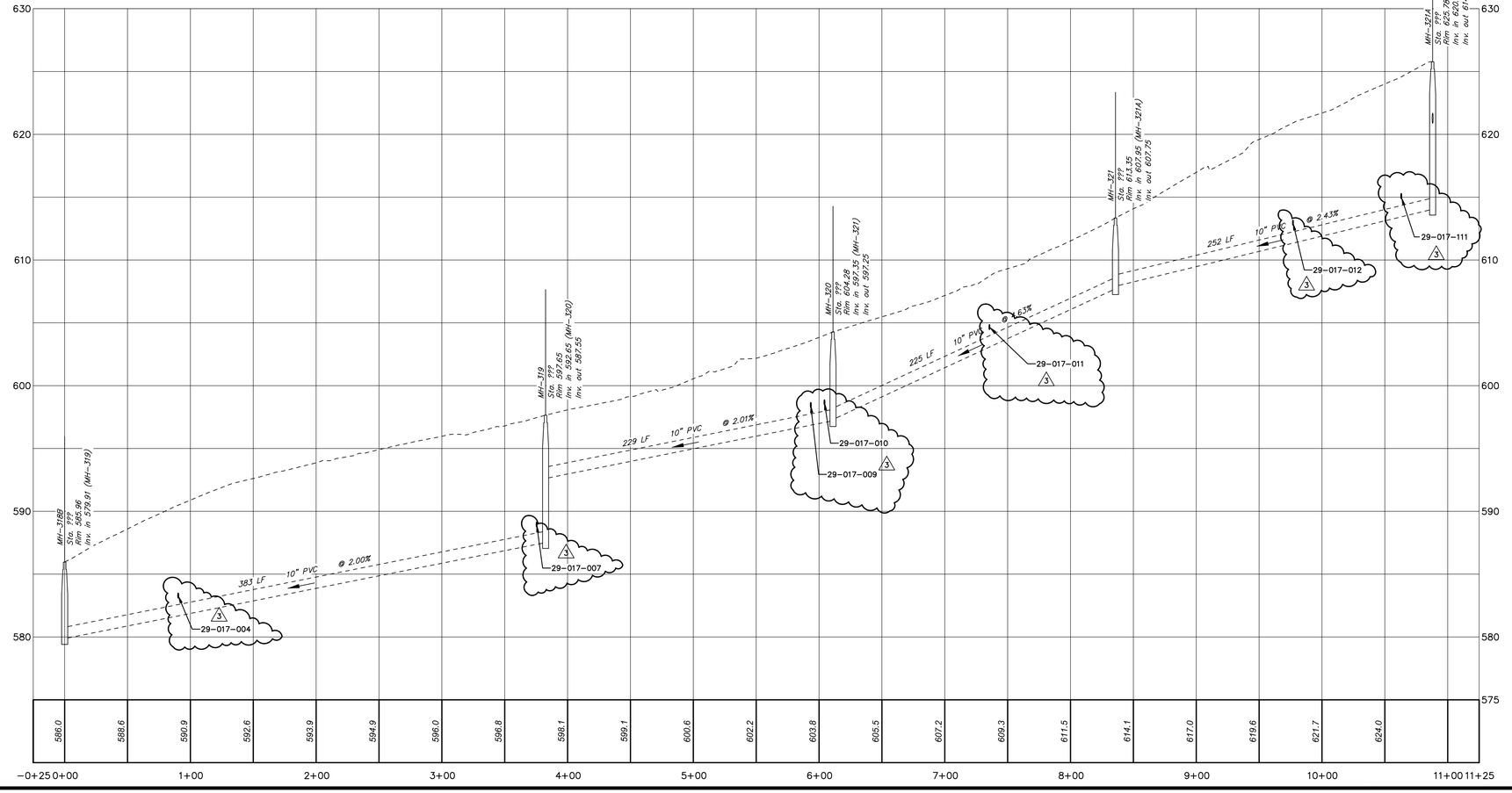

NO.	REVISION	DATE	BY
3	WCD-1	05/23/23	NS
2	ADDENDUM NO. 3	10/11/22	RSF
1	ADDENDUM NO. 1	9/23/22	RSF

HRG
Herbert, Rowland & Grubic, Inc.
Engineering & Related Services
AN EMPLOYEE-OWNED COMPANY

369 East Park Drive
Harrisburg, PA 17111
(717) 564-1121
Fax (717) 564-1158
hrg@hrg-inc.com
www.hrg-inc.com

HALIFAX AREA
WATER AND SEWER AUTHORITY
203 ARMSTRONG STREET
HALIFAX, PA 17032
(717) 896-8083

SANITARY SEWER PLAN AND PROFILE
PETERS MOUNTAIN ROAD
FOR
HALIFAX TWP. SANITARY SEWER EXTENSION PROJECT
HALIFAX TOWNSHIP **DAUPHIN COUNTY** **PENNSYLVANIA**

PROJ. MGR.	– JJM
DESIGN–	MDC
CADD–	RSF/BAB
CHECKED–	MDC
SCALE–	AS NOTED
DATE–	AUG. 2022

DRAWING NO.
PP-29
SHEET NO.
32 OF 109
PROJECT 001650.0428

File name: P:\001\001650.2\ENG\DWGS\Plan Set\SAN\W001650428-PP-01.dwg Layout:PETERS MTN May 24, 2023–11:22am rsfarnwell

HORIZ: 50' 25' 0' 50'
VERT: 5' 2.5' 0' 5'
SCALE IN FEET

NOTES:
LIMIT OF CONTRACT IS TO IDENTIFY DEMARCATION OF FORCE MAIN INSTALLATION ONLY. CONTRACT 2022-02 IS RESPONSIBLE FOR PUMP STATION IMPROVEMENTS IN ACCORDANCE WITH OTHER DRAWINGS AND CONTRACT REQUIREMENTS.

NO.	REVISION	DATE	BY
1	ADDENDUM NO. 2	10/5/22	RSF

COMMONWEALTH OF PENNSYLVANIA — REGISTERED PROFESSIONAL — MATTHEW DAVID CICHY — ENGINEER PE074220

HRG
Herbert, Rowland & Grubic, Inc.
Engineering & Related Services
AN EMPLOYEE-OWNED COMPANY

369 East Park Drive
Harrisburg, PA 17111
(717) 564-1121
Fax (717) 564-1158
hrg@hrg-inc.com
www.hrg-inc.com

HALIFAX AREA
WATER AND SEWER AUTHORITY
203 ARMSTRONG STREET
HALIFAX, PA 17032
(717) 896-8083

FORCE MAIN PLAN AND PROFILE
CREEK ROAD PUMP STATION
FOR
HALIFAX TWP. SANITARY SEWER EXTENSION PROJECT

HALIFAX TOWNSHIP — DAUPHIN COUNTY — PENNSYLVANIA

PROJ. MGR. – JJM
DESIGN– MDC
CADD– RSF/BAB
CHECKED–MDC
SCALE– AS NOTED
DATE– AUG. 2022

DRAWING NO.
FMCR-1
SHEET NO.
33 OF 109
PROJECT 001650.0428

File name: P:\0016\001650_0428\C3D\Plan Sets\SAN\W0016500428-PP-FMCR.dwg Layout:1 Oct 06, 2022-7:25am sfocht

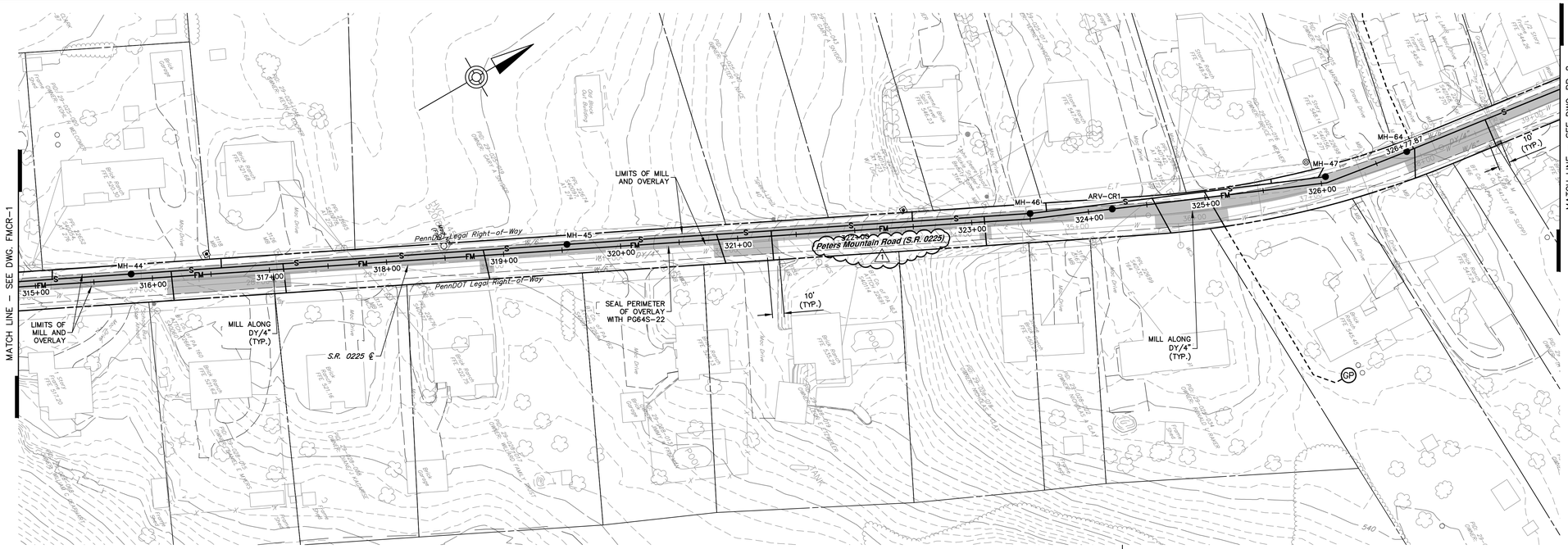

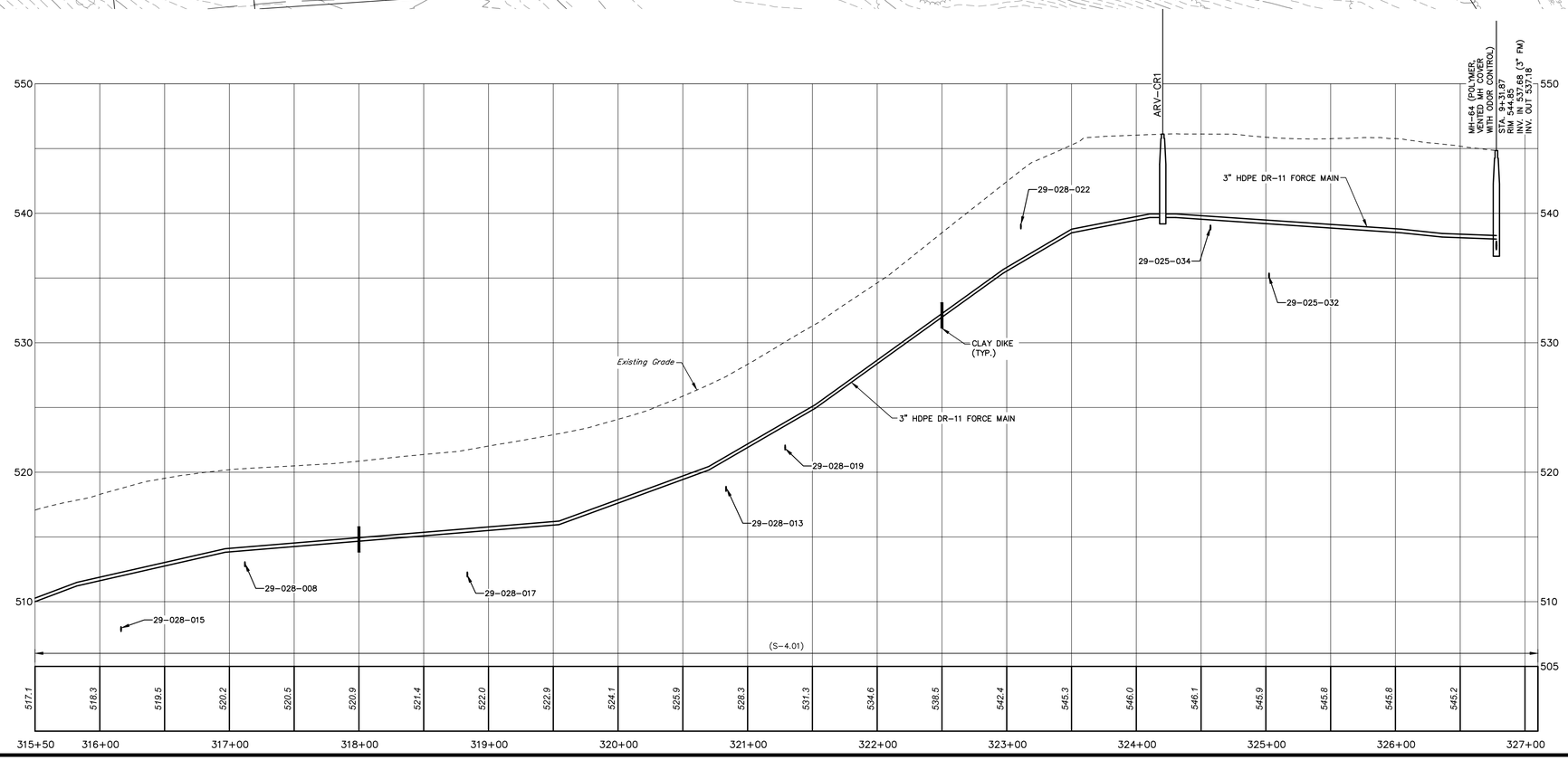

HORIZ: 50' 25' 0' 50'
VERT: 5' 2.5' 0' 5'
SCALE IN FEET

NO.	REVISION	DATE	BY
1	ADDENDUM NO. 2	10/5/22	RSF

COMMONWEALTH OF PENNSYLVANIA
REGISTERED PROFESSIONAL
MATTHEW DAVID CICHY
ENGINEER
PE074220

HRG
Herbert, Rowland & Grubic, Inc.
Engineering & Related Services
AN EMPLOYEE-OWNED COMPANY
369 East Park Drive
Harrisburg, PA 17111
(717) 564-1121
Fax (717) 564-1158
hrg@hrg-inc.com
www.hrg-inc.com

HALIFAX AREA
WATER AND SEWER AUTHORITY
203 ARMSTRONG STREET
HALIFAX, PA 17032
(717) 896-8083

FORCE MAIN PLAN AND PROFILE
CREEK ROAD PUMP STATION
FOR
HALIFAX TWP. SANITARY SEWER EXTENSION PROJECT
HALIFAX TOWNSHIP DAUPHIN COUNTY PENNSYLVANIA

PROJ. MGR. – JJM
DESIGN– MDC
CADD– RSF/BAB
CHECKED–MDC
SCALE– AS NOTED
DATE– AUG. 2022

DRAWING NO.
FMCR-2
SHEET NO.
34 OF 109
PROJECT 001650.0428

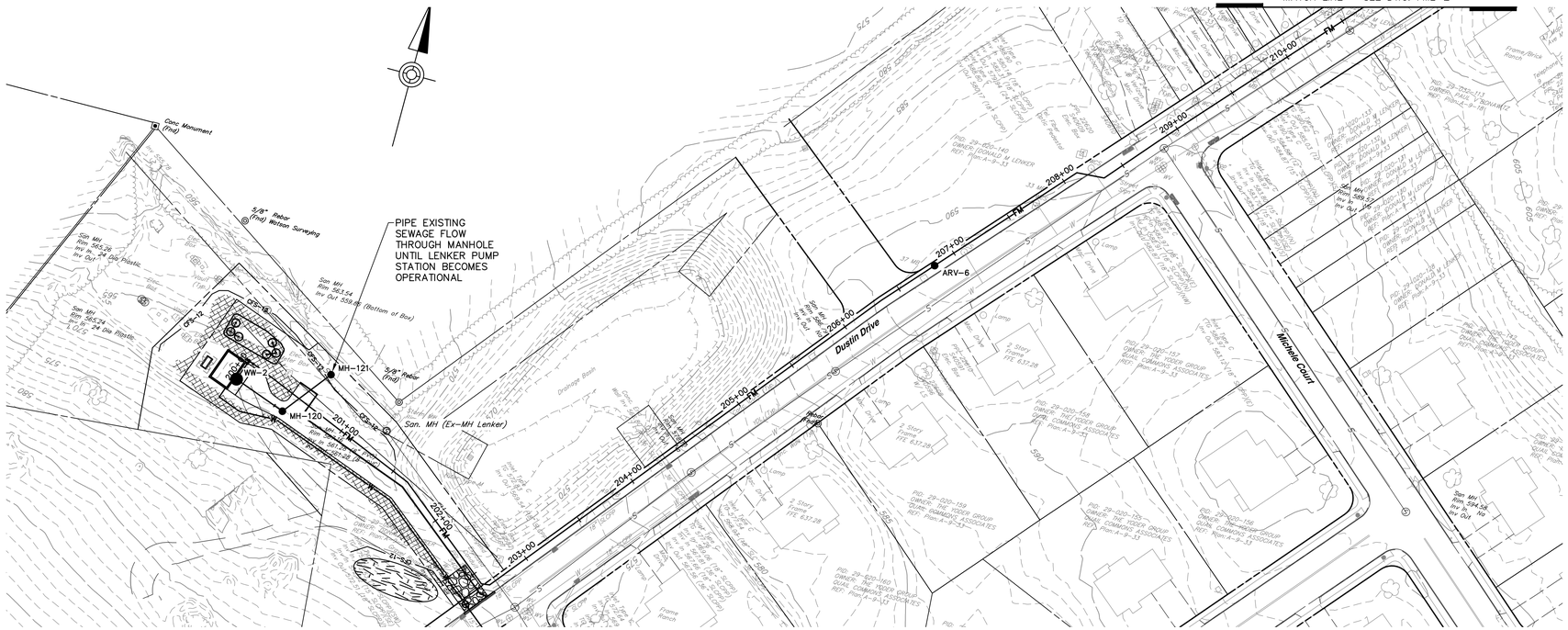

NOTES:
1. LIMIT OF CONTRACT IS TO IDENTIFY DEMARCATION OF GRAVITY SEWER AND FORCE MAIN INSTALLATION ONLY. CONTRACT 2022-02 IS RESPONSIBLE FOR PUMP STATION IMPROVEMENTS IN ACCORDANCE WITH OTHER DRAWINGS AND CONTRACT REQUIREMENTS.
2. RESTORATION AT PUMP STATION SITE TO BE COMPLETE BY CONTRACT 2022-02.

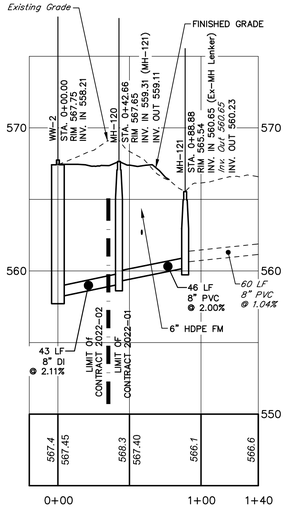

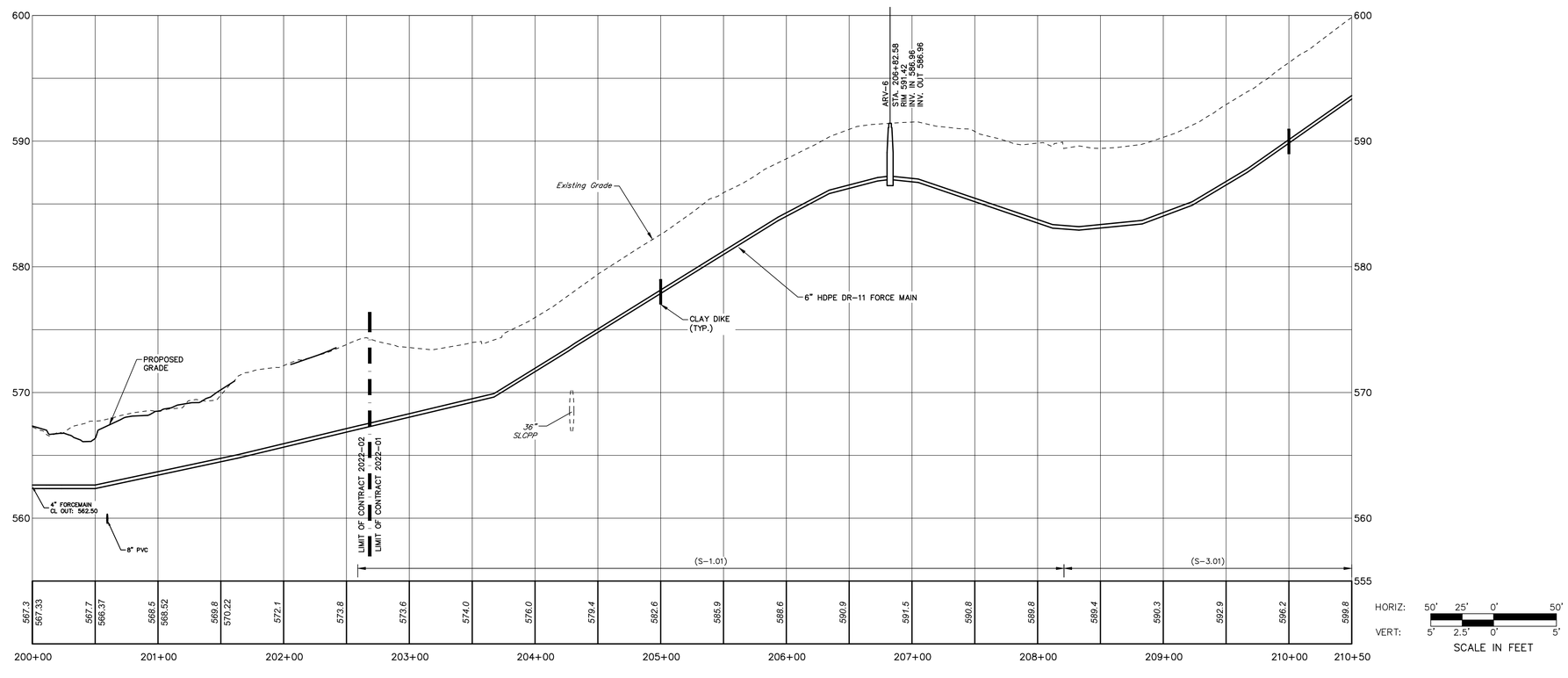

NO.	REVISION	DATE	BY

COMMONWEALTH OF PENNSYLVANIA
REGISTERED PROFESSIONAL
MATTHEW DAVID CICHY
ENGINEER
PE074220

HRG
Herbert, Rowland & Grubic, Inc.
Engineering & Related Services
AN EMPLOYEE-OWNED COMPANY
369 East Park Drive
Harrisburg, PA 17111
(717) 564-1121
Fax (717) 564-1158
hrg@hrg-inc.com
www.hrg-inc.com

HALIFAX AREA
WATER AND SEWER AUTHORITY
203 ARMSTRONG STREET
HALIFAX, PA 17032
(717) 896-8083

FORCE MAIN AND GRAVITY SEWER PLAN AND PROFILE
LENKER PUMP STATION
FOR
HALIFAX TWP. SANITARY SEWER EXTENSION PROJECT

HALIFAX TOWNSHIP DAUPHIN COUNTY PENNSYLVANIA

PROJ. MGR. – JJM	
DESIGN– MDC	
CADD– RSF/BAB	
CHECKED–MDC	
SCALE– AS NOTED	
DATE– AUG. 2022	

DRAWING NO.
FML-1
SHEET NO.
35 OF 109
PROJECT 001650.0428

ADDED UNDERGROUND ELECTRIC AND UNDERGROUND CABLE INFORMATION PROVIDED THROUGH ONE-CALL TO BASEMAP – QUALITY LEVEL D

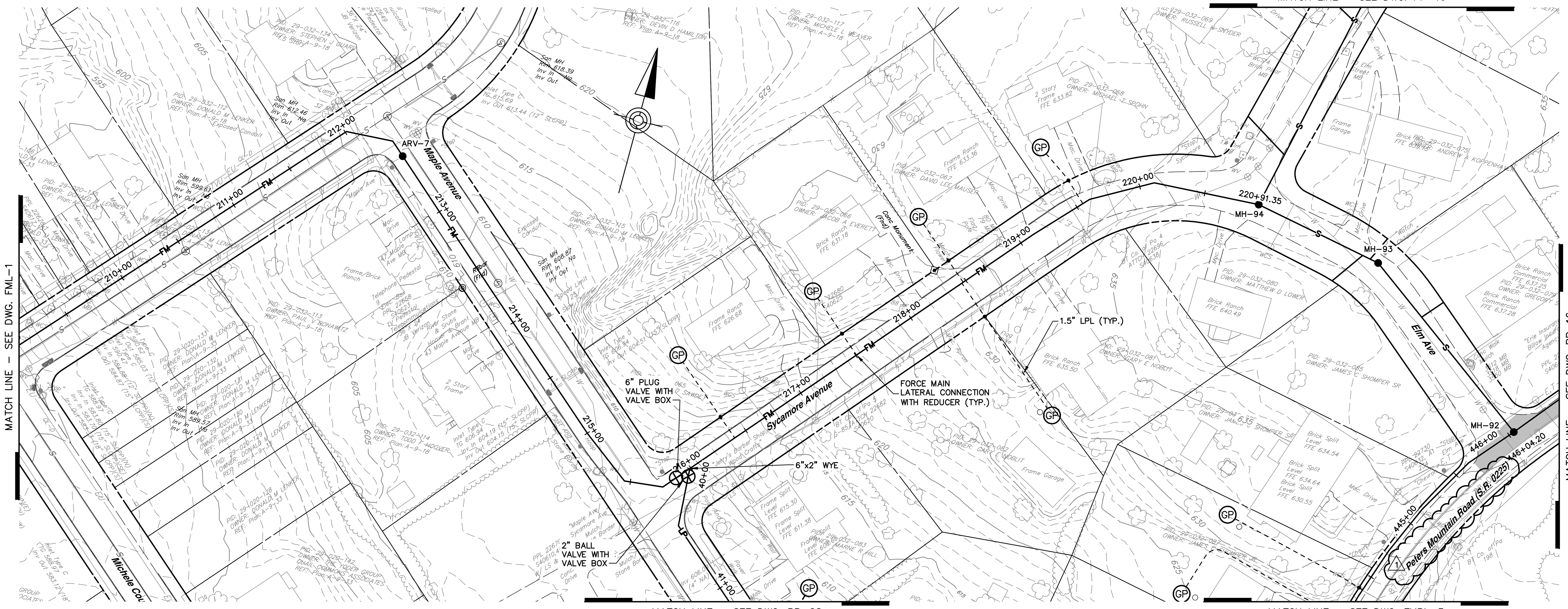

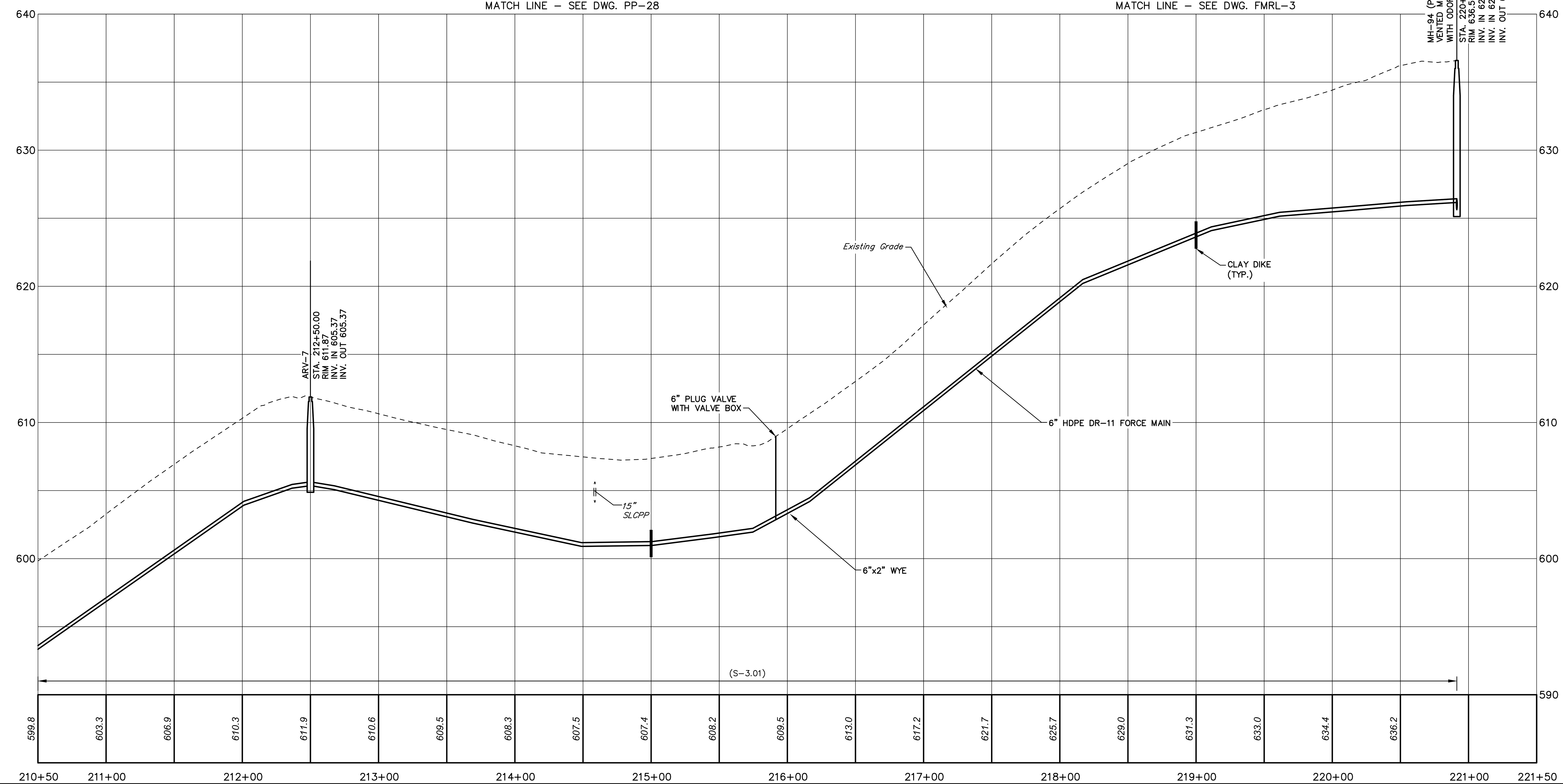

HORIZ: 50' 25' 0' 50'
VERT: 5' 2.5' 0' 5'
SCALE IN FEET

NO.	REVISION	DATE	BY
1	ADDENDUM NO. 2	10/5/22	RSF

COMMONWEALTH OF PENNSYLVANIA REGISTERED PROFESSIONAL MATTHEW DAVID CICHY ENGINEER PE074220

HRG Herbert, Rowland & Grubic, Inc.
Engineering & Related Services
AN EMPLOYEE-OWNED COMPANY

369 East Park Drive
Harrisburg, PA 17111
(717) 564-1121
Fax (717) 564-1158
hrg@hrg-inc.com
www.hrg-inc.com

HALIFAX AREA
WATER AND SEWER AUTHORITY
203 ARMSTRONG STREET
HALIFAX, PA 17032
(717) 896-8083

FORCE MAIN PLAN AND PROFILE
LENKER PUMP STATION
FOR
HALIFAX TWP. SANITARY SEWER EXTENSION PROJECT

HALIFAX TOWNSHIP | DAUPHIN COUNTY | PENNSYLVANIA

PROJ. MGR. – JJM
DESIGN– MDC
CADD– RSF/BAB
CHECKED–MDC
SCALE– AS NOTED
DATE– AUG. 2022

DRAWING NO.
FML-2
SHEET NO.
36 OF 109
PROJECT 001650.0428

File name: P:\0016\001650_0428\C3D\Plan Sets\SAN\W0016500428-PP-FML.dwg Layout:2 Oct 06, 2022-7:34am sfocht

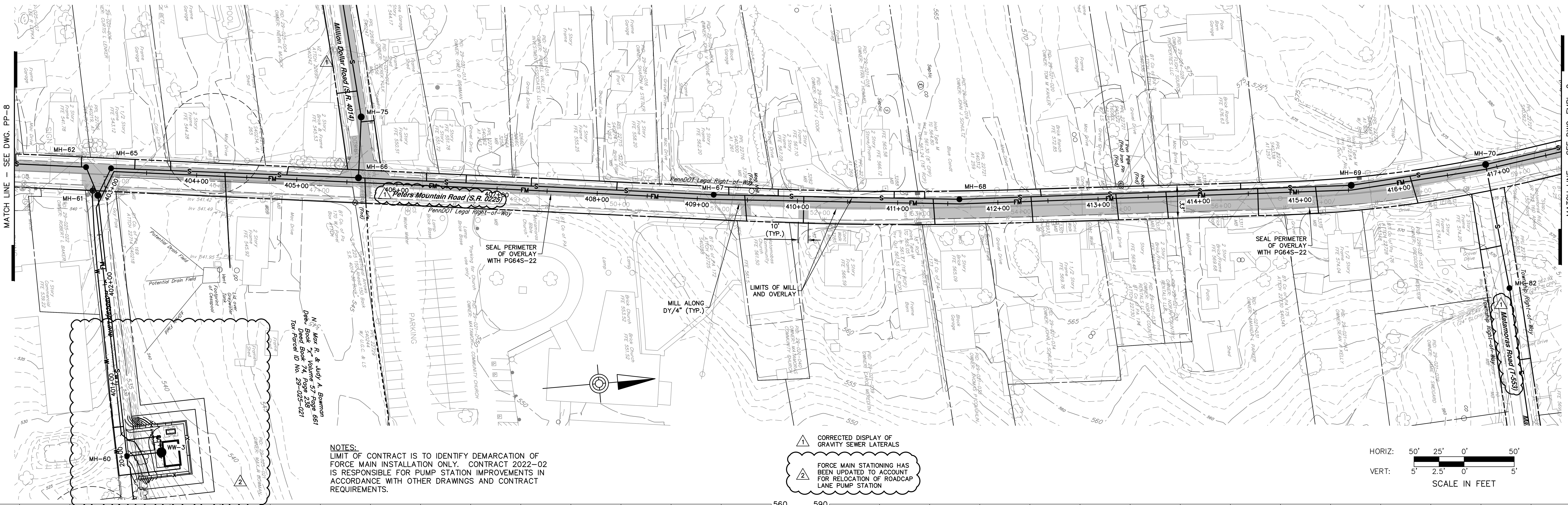

NOTES:
LIMIT OF CONTRACT IS TO IDENTIFY DEMARCATION OF FORCE MAIN INSTALLATION ONLY. CONTRACT 2022-02 IS RESPONSIBLE FOR PUMP STATION IMPROVEMENTS IN ACCORDANCE WITH OTHER DRAWINGS AND CONTRACT REQUIREMENTS.

1 CORRECTED DISPLAY OF GRAVITY SEWER LATERALS

2 FORCE MAIN STATIONING HAS BEEN UPDATED TO ACCOUNT FOR RELOCATION OF ROADCAP LANE PUMP STATION

HORIZ: 50' 25' 0' 50'
VERT: 5' 2.5' 0' 5'
SCALE IN FEET

NO.	REVISION	DATE	BY
2	WORK CHANGE DIRECTIVE NO. 1	3/6/23	RSF
1	ADDENDUM NO. 2	10/5/22	RSF

COMMONWEALTH OF PENNSYLVANIA
REGISTERED PROFESSIONAL
MATTHEW DAVID CICHY
ENGINEER PE074220

HRG
Herbert, Rowland & Grubic, Inc.
Engineering & Related Services
AN EMPLOYEE-OWNED COMPANY
369 East Park Drive
Harrisburg, PA 17111
(717) 564-1121
Fax (717) 564-1158
hrg@hrg-inc.com
www.hrg-inc.com

HALIFAX AREA
WATER AND SEWER AUTHORITY
203 ARMSTRONG STREET
HALIFAX, PA 17032
(717) 896-8083

FORCE MAIN PLAN AND PROFILE
ROADCAP LANE PUMP STATION
FOR
HALIFAX TWP. SANITARY SEWER EXTENSION PROJECT
HALIFAX TOWNSHIP — DAUPHIN COUNTY — PENNSYLVANIA

PROJ. MGR. – JJM
DESIGN– MDC
CADD– RSF/BAB
CHECKED–MDC
SCALE– AS NOTED
DATE– AUG. 2022

DRAWING NO.
FMRL-1
SHEET NO. 37 OF 109
PROJECT 001650.0428

File name: P:\0016\001650_0428\C3D\Plan Sets\SAN\RCPS MOVE PP-FMR.dwg Layout:1 Mar 28, 2023-2:25pm sfocht

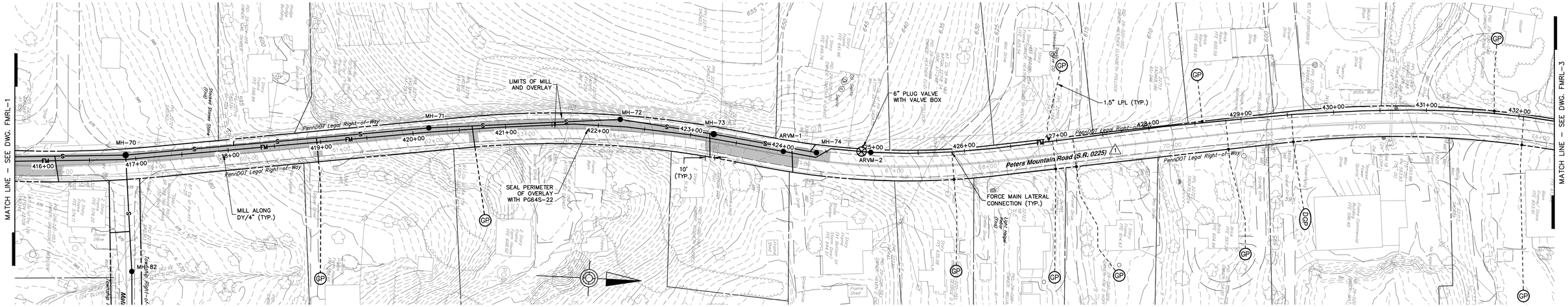

1 CORRECTED DISPLAY OF GRAVITY SEWER LATERALS

2 FORCE MAIN STATIONING HAS BEEN UPDATED TO ACCOUNT FOR RELOCATION OF ROADCAP LANE PUMP STATION

NOTES:
ARVM-2 TEE INVERT TO BE LOCATED AT SAME ELEVATION AS 6" FORCE MAIN DISCHARGE ELEVATION AT MH-92 (624.48')

HORIZ: 50' 25' 0' 50'
VERT: 5' 2.5' 0' 5'
SCALE IN FEET

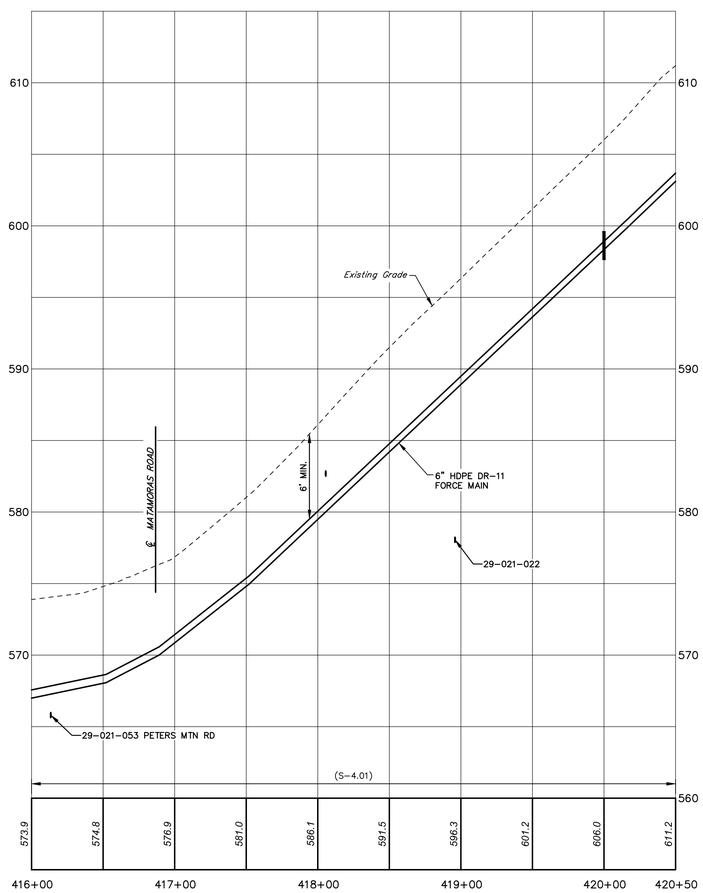

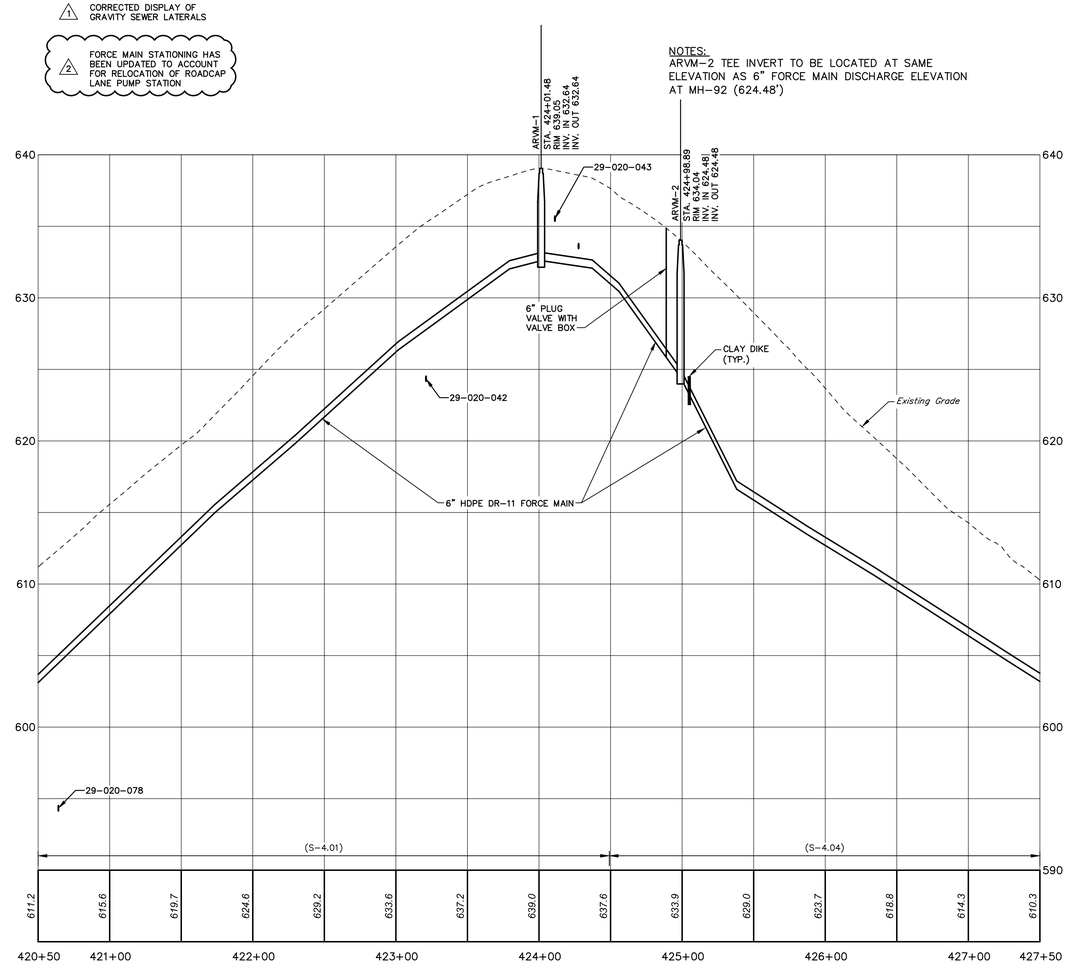

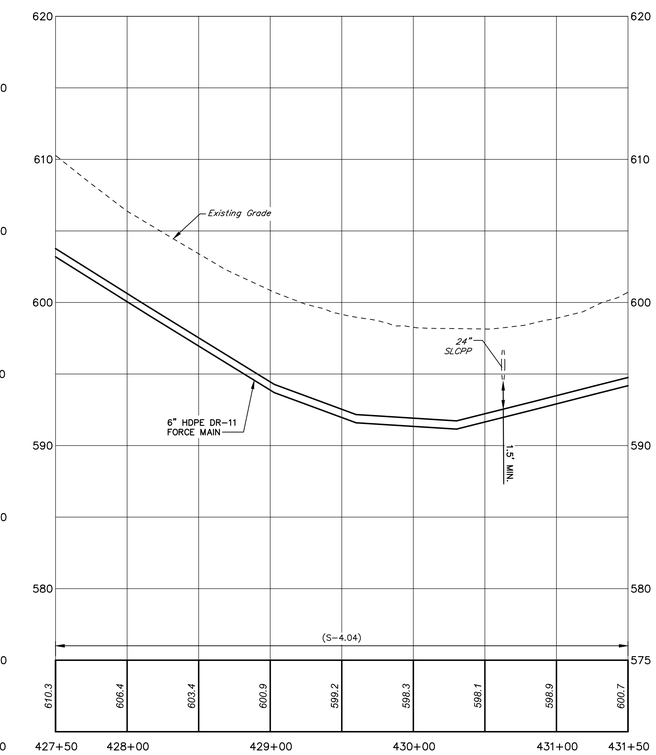

NO.	REVISION	DATE	BY
2	WORK CHANGE DIRECTIVE NO. 1	3/6/23	RSF
1	ADDENDUM NO. 2	10/5/22	RSF

COMMONWEALTH OF PENNSYLVANIA
REGISTERED PROFESSIONAL
MATTHEW DAVID CICHY
ENGINEER
PE074220

HRG
Herbert, Rowland & Grubic, Inc.
Engineering & Related Services
AN EMPLOYEE-OWNED COMPANY
369 East Park Drive
Harrisburg, PA 17111
(717) 564-1121
Fax (717) 564-1158
hrg@hrg-inc.com
www.hrg-inc.com

HALIFAX AREA
WATER AND SEWER AUTHORITY
203 ARMSTRONG STREET
HALIFAX, PA 17032
(717) 896-8083

FORCE MAIN PLAN AND PROFILE
ROADCAP LANE PUMP STATION
FOR
HALIFAX TWP. SANITARY SEWER EXTENSION PROJECT
HALIFAX TOWNSHIP DAUPHIN COUNTY PENNSYLVANIA

PROJ. MGR. – JJM
DESIGN– MDC
CADD– RSF/BAB
CHECKED–MDC
SCALE– AS NOTED
DATE– AUG. 2022

DRAWING NO.
FMRL-2
SHEET NO.
38 OF 109
PROJECT 001650.0428

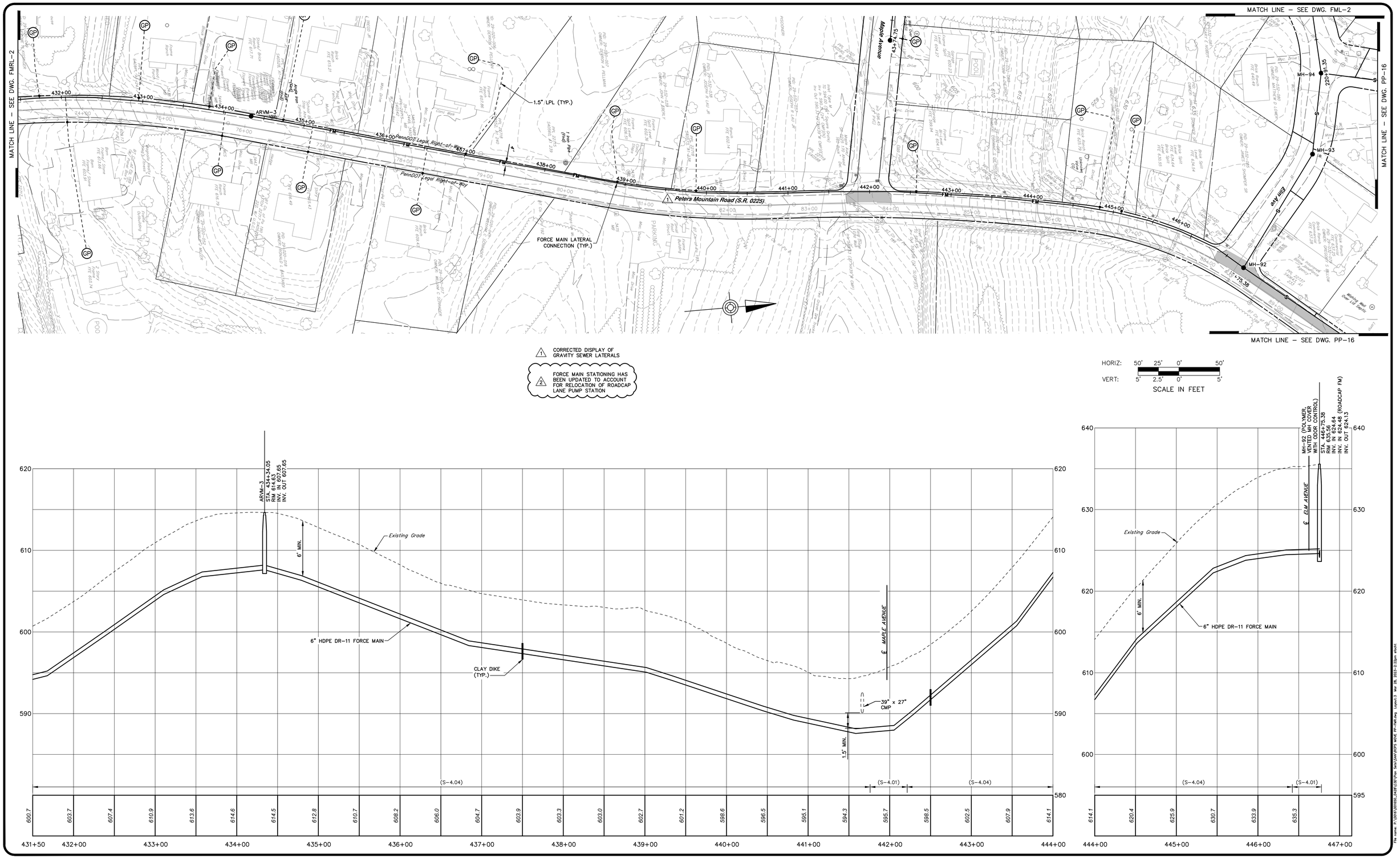

NO.	REVISION	DATE	BY
2	WORK CHANGE DIRECTIVE NO. 1	3/6/23	RSF
1	ADDENDUM NO. 2	10/5/22	RSF

COMMONWEALTH OF PENNSYLVANIA
REGISTERED PROFESSIONAL
MATTHEW DAVID CICHY
ENGINEER
PE074220

HRG
Herbert, Rowland & Grubic, Inc.
Engineering & Related Services
AN EMPLOYEE-OWNED COMPANY
369 East Park Drive
Harrisburg, PA 17111
(717) 564-1121
Fax (717) 564-1158
hrg@hrg-inc.com
www.hrg-inc.com

HALIFAX AREA
WATER AND SEWER AUTHORITY
203 ARMSTRONG STREET
HALIFAX, PA 17032
(717) 896-8083

FORCE MAIN PLAN AND PROFILE
ROADCAP LANE PUMP STATION
FOR
HALIFAX TWP. SANITARY SEWER EXTENSION PROJECT
HALIFAX TOWNSHIP DAUPHIN COUNTY PENNSYLVANIA

PROJ. MGR. – JJM
DESIGN– MDC
CADD– RSF/BAB
CHECKED–MDC
SCALE– AS NOTED
DATE– AUG. 2022

DRAWING NO.
FMRL-3
SHEET NO.
39 OF 109
PROJECT 001650.0428

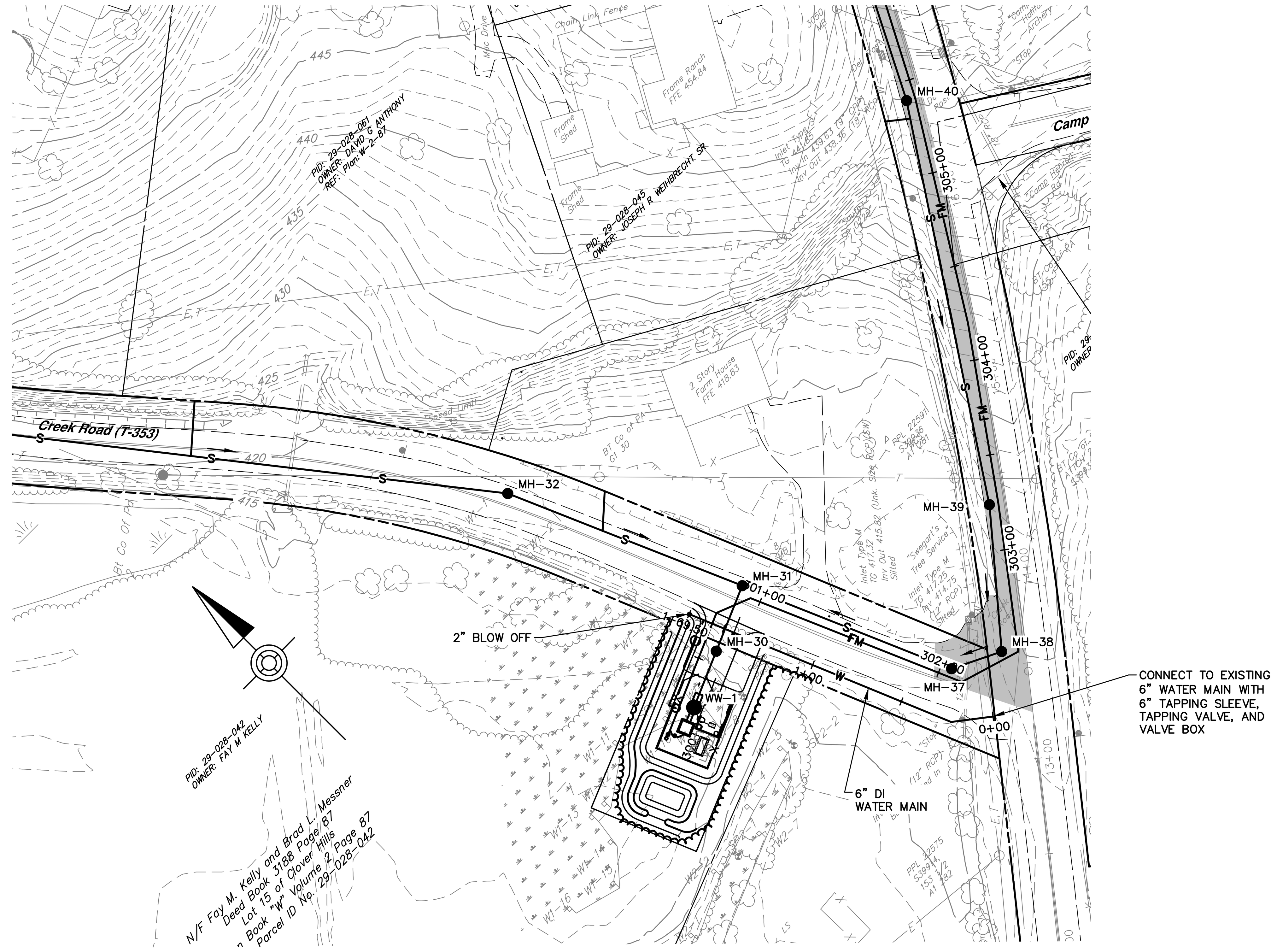

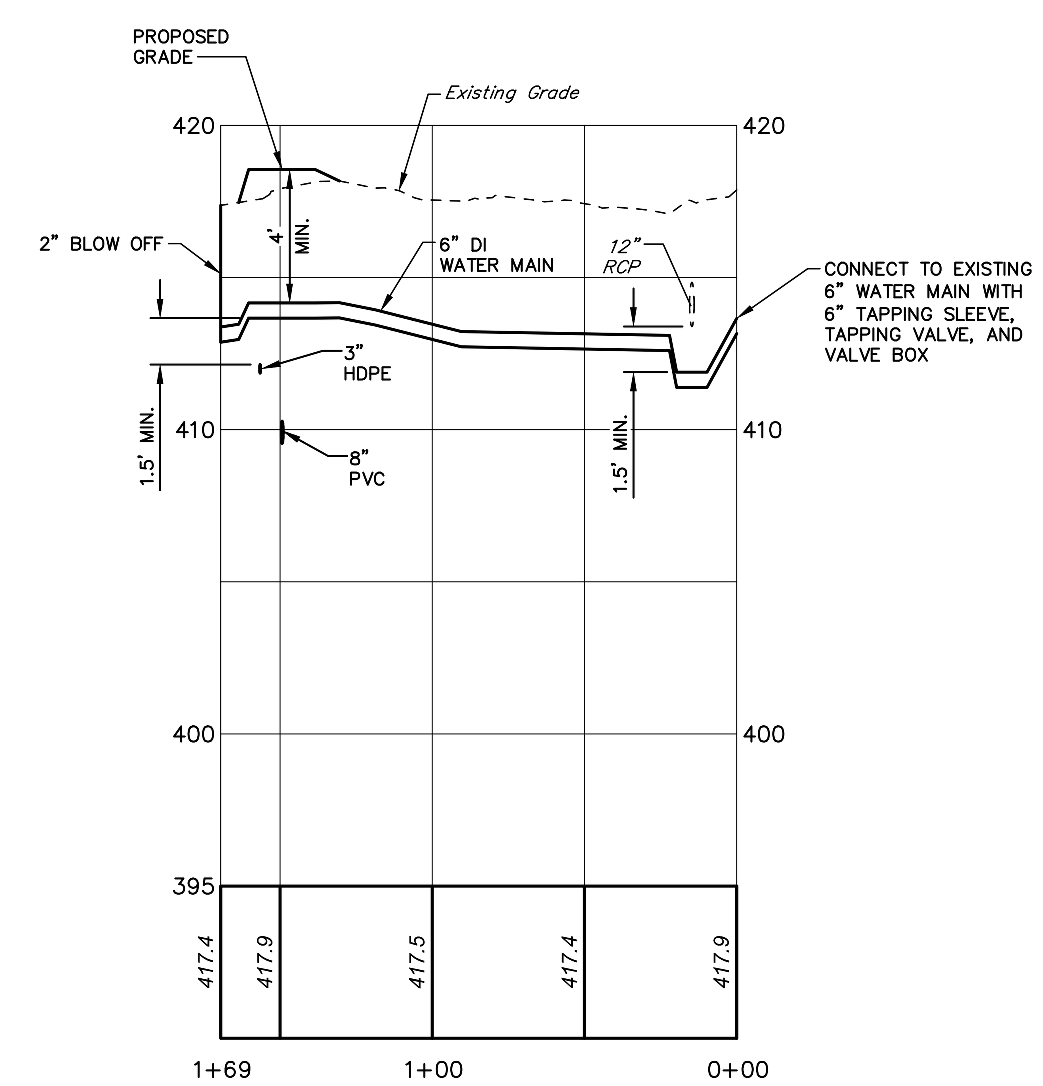

HORIZ: 50' 25' 0' 50'

VERT: 5' 2.5' 0' 5'

SCALE IN FEET

NO.	REVISION	DATE	BY

COMMONWEALTH OF PENNSYLVANIA
REGISTERED PROFESSIONAL
MATTHEW DAVID CICHY
ENGINEER
PE074220

HRG
Herbert, Rowland & Grubic, Inc.
Engineering & Related Services
AN EMPLOYEE-OWNED COMPANY

369 East Park Drive
Harrisburg, PA 17111
(717) 564-1121
Fax (717) 564-1158
hrg@hrg-inc.com
www.hrg-inc.com

HALIFAX AREA
WATER AND SEWER AUTHORITY
203 ARMSTRONG STREET
HALIFAX, PA 17032
(717) 896-8083

CREEK ROAD WATER MAIN EXTENSION

FOR

HALIFAX TWP. SANITARY SEWER EXTENSION PROJECT

HALIFAX TOWNSHIP **DAUPHIN COUNTY** **PENNSYLVANIA**

PROJ. MGR. – JJM
DESIGN– MDC
CADD– RSF
CHECKED–MDC
SCALE– AS NOTED
DATE– AUG. 2022

DRAWING NO.
W-1
SHEET NO.
40 OF **109**
PROJECT 001650.0428

File name: P:\0016\001650_0428\C3D\Plan Sets\SAN\W0016500428-WAT.dwg Layout:1 Sep 02, 2022-11:39am sfocht

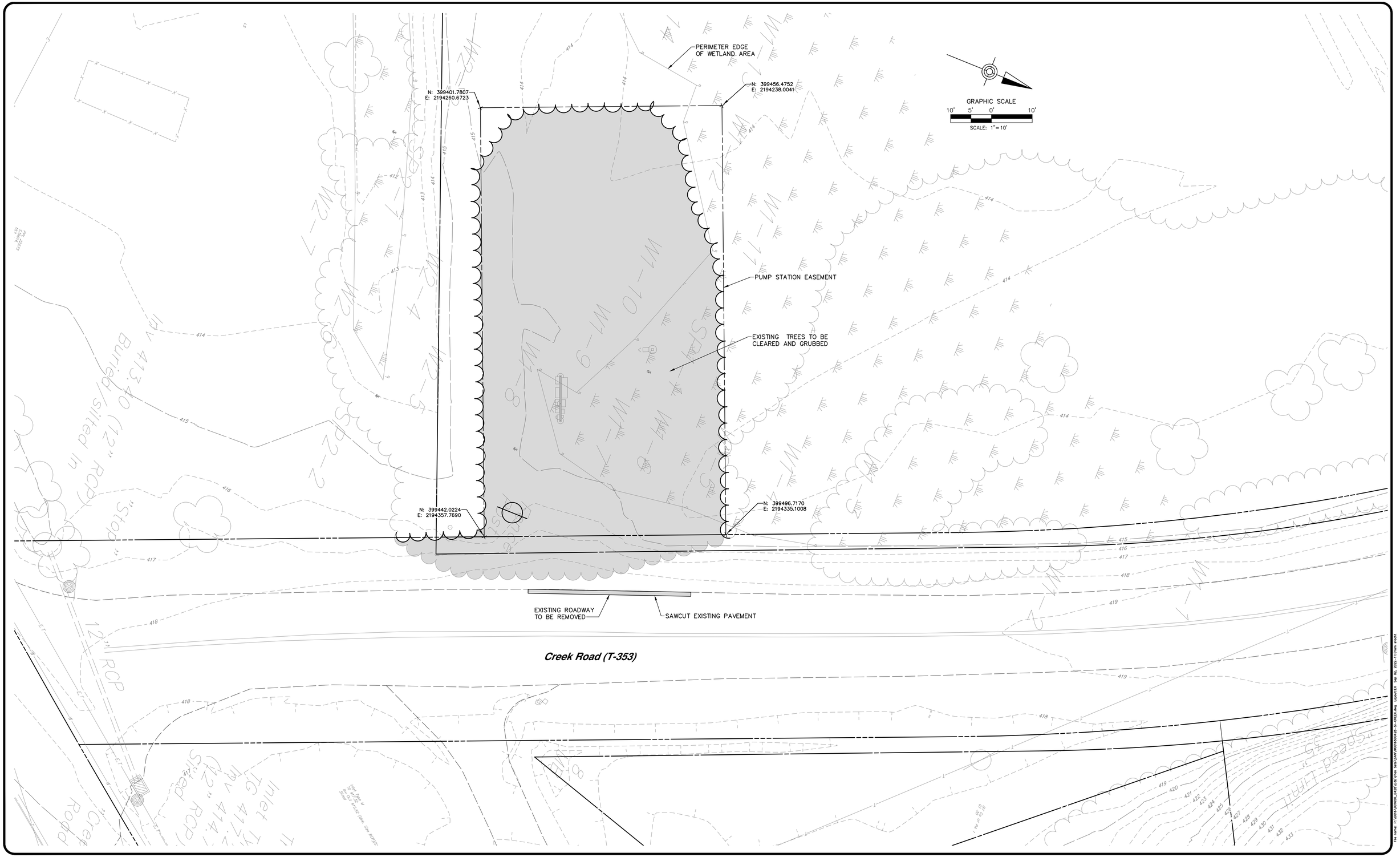

NO.	REVISION	DATE	BY

COMMONWEALTH OF PENNSYLVANIA
REGISTERED PROFESSIONAL
MATTHEW DAVID CICHY
ENGINEER
PE074220

HRG
Herbert, Rowland & Grubic, Inc.
Engineering & Related Services
AN EMPLOYEE-OWNED COMPANY
369 East Park Drive
Harrisburg, PA 17111
(717) 564-1121
Fax (717) 564-1158
hrg@hrg-inc.com
www.hrg-inc.com

HALIFAX AREA
WATER AND SEWER AUTHORITY
203 ARMSTRONG STREET
HALIFAX, PA 17032
(717) 896-8083

CREEK ROAD PUMP STATION
EXISTING CONDITIONS AND DEMOLITION SITE PLAN
FOR
HALIFAX TWP. SANITARY SEWER EXTENSION PROJECT
HALIFAX TOWNSHIP DAUPHIN COUNTY PENNSYLVANIA

PROJ. MGR. – JJM	
DESIGN– MDC	
CADD– BAB	
CHECKED–	
SCALE– AS NOTED	
DATE– AUG. 2022	

DRAWING NO.
CR-1
SHEET NO.
41 OF 109
PROJECT 001650.0428

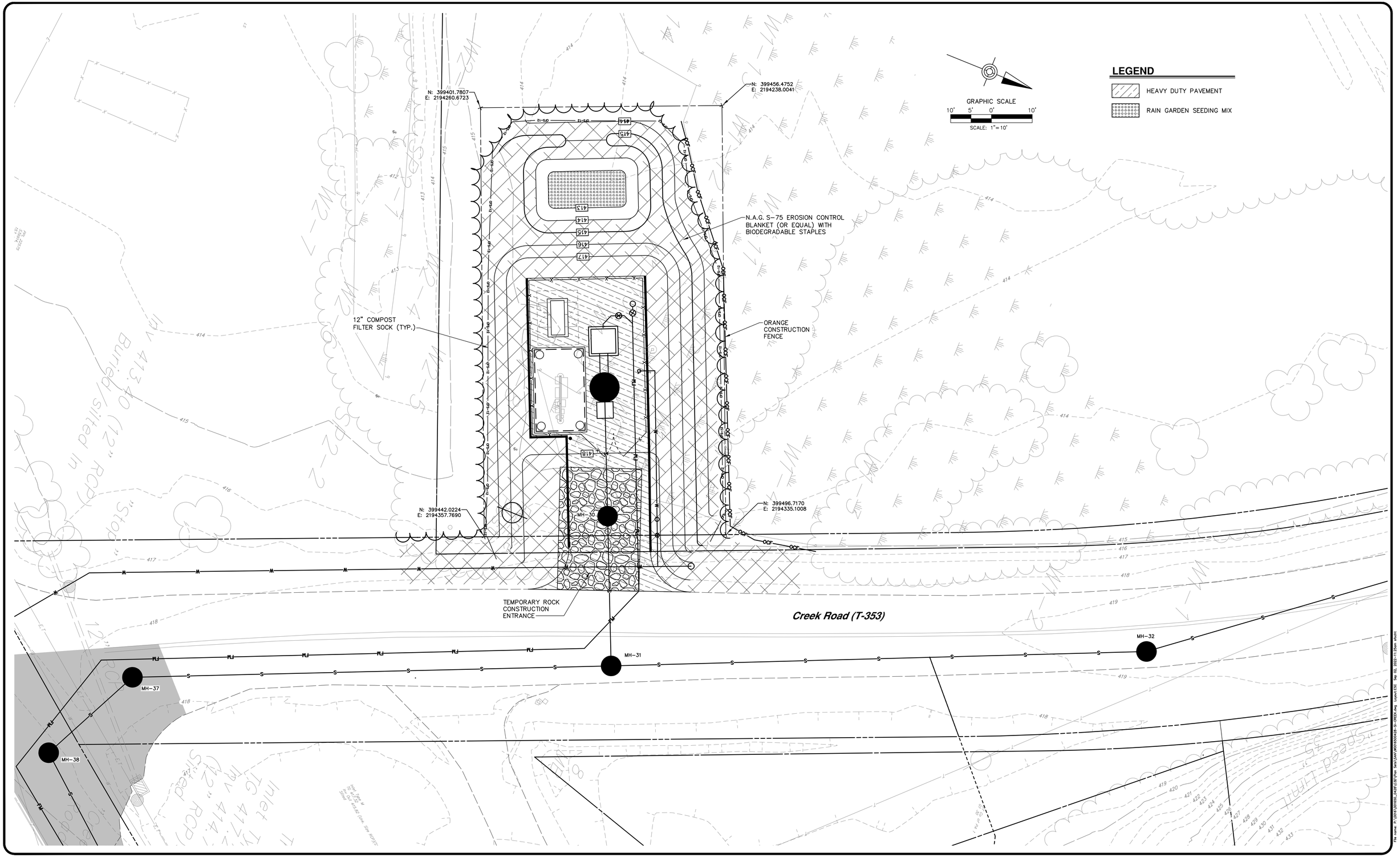

NO.	REVISION	DATE	BY

COMMONWEALTH OF PENNSYLVANIA
REGISTERED PROFESSIONAL
MATTHEW DAVID CICHY
ENGINEER
PE074220

HRG
Herbert, Rowland & Grubic, Inc.
Engineering & Related Services
AN EMPLOYEE-OWNED COMPANY
369 East Park Drive
Harrisburg, PA 17111
(717) 564-1121
Fax (717) 564-1158
hrg@hrg-inc.com
www.hrg-inc.com

HALIFAX AREA
WATER AND SEWER AUTHORITY
203 ARMSTRONG STREET
HALIFAX, PA 17032
(717) 896-8083

CREEK ROAD PUMP STATION
EROSION AND SEDIMENTATION CONTROL SITE PLAN
FOR
HALIFAX TWP. SANITARY SEWER EXTENSION PROJECT

HALIFAX TOWNSHIP DAUPHIN COUNTY PENNSYLVANIA

PROJ. MGR. –	JJM
DESIGN–	MDC
CADD–	BAB
CHECKED–	
SCALE–	AS NOTED
DATE–	AUG. 2022

DRAWING NO.
CR-2
SHEET NO.
42 OF 109
PROJECT 001650.0428

File name: P:\001\A\001650.0428\CAD\Plan Sets\SWM\001650042B-ESPSS2.dwg Layout:ESS Sep 02, 2022–11:25am abbott

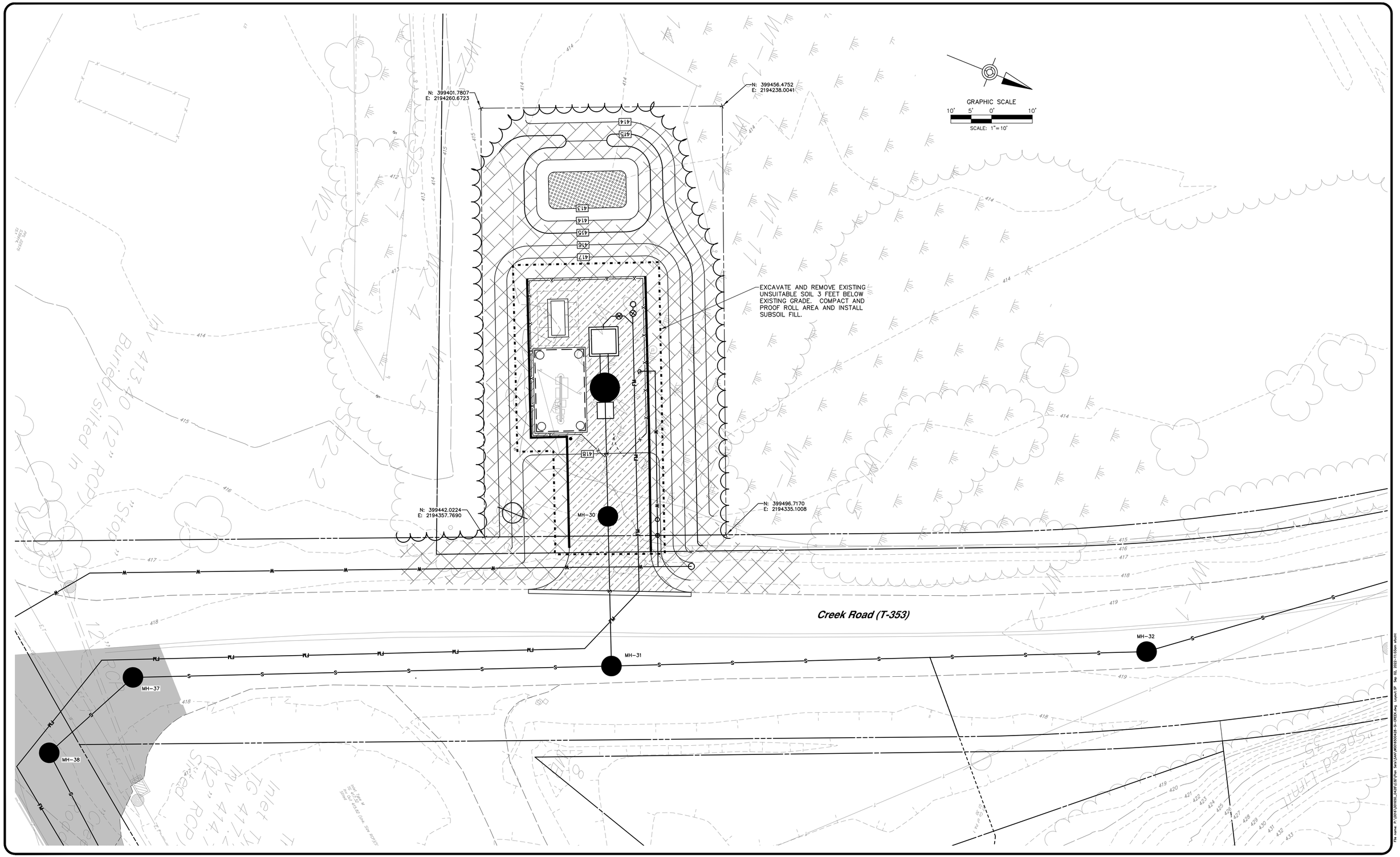

NO.	REVISION	DATE	BY

COMMONWEALTH OF PENNSYLVANIA
REGISTERED PROFESSIONAL
MATTHEW DAVID CICHY
ENGINEER
PE074220

HRG
Herbert, Rowland & Grubic, Inc.
Engineering & Related Services
AN EMPLOYEE-OWNED COMPANY

369 East Park Drive
Harrisburg, PA 17111
(717) 564-1121
Fax (717) 564-1158
hrg@hrg-inc.com
www.hrg-inc.com

HALIFAX AREA
WATER AND SEWER AUTHORITY
203 ARMSTRONG STREET
HALIFAX, PA 17032
(717) 896-8083

CREEK ROAD PUMP STATION
SITE PREPARATION PLAN
FOR
HALIFAX TWP. SANITARY SEWER EXTENSION PROJECT
HALIFAX TOWNSHIP DAUPHIN COUNTY PENNSYLVANIA

PROJ. MGR. – JJM	
DESIGN–	MDC
CADD–	BAB
CHECKED–	
SCALE–	AS NOTED
DATE–	AUG. 2022

DRAWING NO.
CR-3
SHEET NO.
43 OF 109
PROJECT 001650.0428

COORDINATE DATA				
#	DESC.	NORTHING	EASTING	DESCRIPTION
6	CP–1	399455.64	2194312.79	CENTER OF WET WELL
7	CP–2	399451.15	2194302.40	CENTER OF VALVE VAULT
8	CP–3	399443.68	2194330.28	CORNER OF FENCE
9	CP–4	399428.63	2194295.43	CORNER OF FENCE
10	CP–5	399454.22	2194284.47	CORNER OF FENCE
11	CP–6	399469.24	2194319.26	CORNER OF FENCE
12	CP–7	399456.80	2194365.64	EDGE OF PAVEMENT
13	CP–8	399462.23	2194352.44	EDGE OF PAVEMENT
14	CP–9	399451.53	2194327.44	EDGE OF PAVEMENT
15	CP–10	399443.42	2194330.93	EDGE OF PAVEMENT
16	CP–11	399427.97	2194295.17	EDGE OF PAVEMENT
17	CP–12	399454.63	2194283.76	EDGE OF PAVEMENT
18	CP–13	399470.07	2194319.50	EDGE OF PAVEMENT
19	CP–14	399481.22	2194345.97	EDGE OF PAVEMENT
20	CP–15	399493.98	2194351.38	EDGE OF PAVEMENT

SPILLWAY ELEVATION 414.50'

N: 399401.7807
E: 2194260.6723

N: 399456.4752
E: 2194238.0041

RAIN GARDEN 3 FLOOR ELEV. 413.00'

BOTTOM TO BE SEEDED WITH RAIN GARDEN MIX AND SHRUBBERY

PUMP STATION EASEMENT

GRADE PUMP STATION SITE FOR POSITIVE DRAINAGE TO RAIN GARDEN

BITUMINOUS ROLLED CURB

BITUMINOUS ROLLED CURB

SLOPE SITE @ 2% TOWARD RAIN GARDEN

N: 399442.0224
E: 2194357.7690

N: 399496.7170
E: 2194335.1008

RADII AND NEW PAVEMENT TO MEET THE EDGE AND ELEVATION OF EXISTING PAVEMENT 1

Creek Road (T-353)

MH–30 MH–31 MH–32 MH–37 MH–38

CP–1 CP–2 CP–3 CP–4 CP–5 CP–6 CP–7 CP–8 CP–9 CP–10 CP–11 CP–12 CP–13 CP–14 CP–15

417.15 417.15 417.48 417.48 417.89 417.89 418.65 418.67 418.66

GRAPHIC SCALE
10' 5' 0' 10'
SCALE: 1"=10'

LEGEND

PUMP STATION PAVEMENT 1

RAIN GARDEN SEEDING MIX

NOTES:
1. RESTORE ALL DISTURBED AREA WITH 6" OF SCREENED TOPSOIL, SEEDING, MULCH, AND FERTILIZER IN ACCORDANCE WITH THE CONTRACT DOCUMENTS. 2

NO.	REVISION	DATE	BY
2	ADDENDUM NO. 2	10/5/22	RSF
1	ADDENDUM NO. 1	9/23/22	RSF

COMMONWEALTH OF PENNSYLVANIA
REGISTERED PROFESSIONAL
MATTHEW DAVID CICHY
ENGINEER PE074220

HRG
Herbert, Rowland & Grubic, Inc.
Engineering & Related Services
AN EMPLOYEE-OWNED COMPANY

369 East Park Drive
Harrisburg, PA 17111
(717) 564-1121
Fax (717) 564-1158
hrg@hrg-inc.com
www.hrg-inc.com

HALIFAX AREA WATER AND SEWER AUTHORITY
203 ARMSTRONG STREET
HALIFAX, PA 17032
(717) 896-8083

CREEK ROAD PUMP STATION
SITE GRADING AND SURFACING PLAN
FOR
HALIFAX TWP. SANITARY SEWER EXTENSION PROJECT

HALIFAX TOWNSHIP DAUPHIN COUNTY PENNSYLVANIA

PROJ. MGR. –	JJM
DESIGN–	MDC
CADD–	BAB
CHECKED–	
SCALE–	AS NOTED
DATE–	AUG. 2022

DRAWING NO.
CR-4
SHEET NO.
44 OF 109
PROJECT 001650.0428

File name: P:\001650\001650-2428\03\01\Plan Sets\SAN\MD05050428-S-GRSP.dwg Layout: GR Oct 05, 2022 - 2:33pm sbond

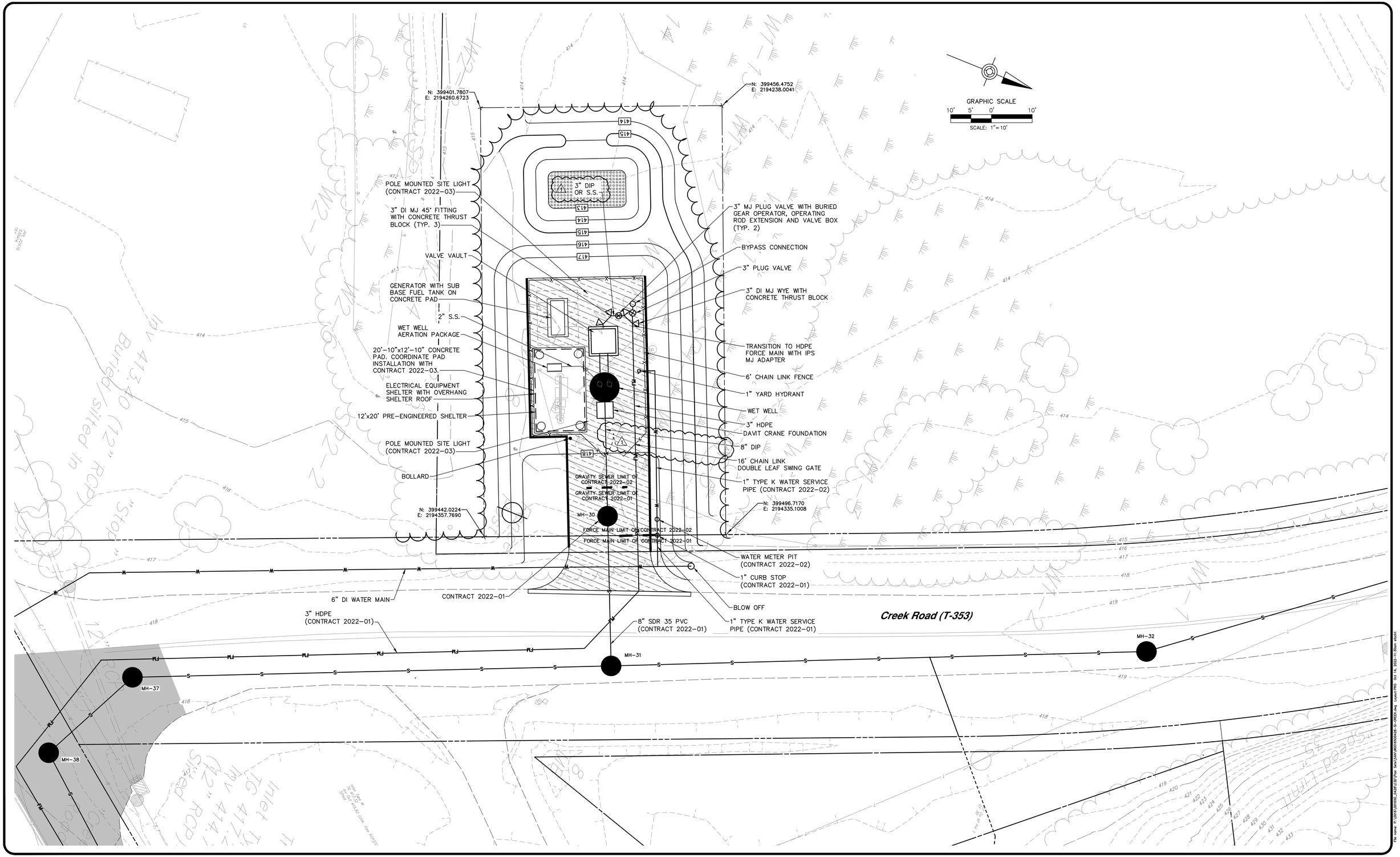

NO.	REVISION	DATE	BY
1	ADDENDUM NO. 4	10/14/22	RSF

COMMONWEALTH OF PENNSYLVANIA
REGISTERED PROFESSIONAL
MATTHEW DAVID CICHY
ENGINEER
PE074220

HRG
Herbert, Rowland & Grubic, Inc.
Engineering & Related Services
AN EMPLOYEE-OWNED COMPANY
369 East Park Drive
Harrisburg, PA 17111
(717) 564-1121
Fax (717) 564-1158
hrg@hrg-inc.com
www.hrg-inc.com

HALIFAX AREA
WATER AND SEWER AUTHORITY
203 ARMSTRONG STREET
HALIFAX, PA 17032
(717) 896-8083

CREEK ROAD PUMP STATION
PROPOSED SITE PLAN
FOR
HALIFAX TWP. SANITARY SEWER EXTENSION PROJECT
HALIFAX TOWNSHIP DAUPHIN COUNTY PENNSYLVANIA

PROJ. MGR.	JJM
DESIGN	MDC
CADD	BAB
CHECKED	MDC
SCALE	AS NOTED
DATE	AUG. 2022

DRAWING NO.
CR-5
SHEET NO.
45 OF 109
PROJECT 001650.0428

NOTES:

1. ALL HARDWARE, BRACKETS, COMPONENTS, RAILS, SUPPORTS, AND ANCHORS IN WET WELL SHALL BE STAINLESS STEEL.
2. ALL PIPE PENETRATIONS SHALL BE PROVIDED WITH FLEXIBLE GASKETS OR LINK SEALS.
3. CONTRACTOR SHALL COORDINATE PUMP CENTERLINE SEPARATION DISTANCE WITH PUMP MANUFACTURER TO DETERMINE THICKNESS OF FILLER FLANGES.
4. ALL PIPE AND FITTING IN THE WET WELL AND VALVE VAULT SHALL BE EITHER FLANGED OR GROOVED CONNECTIONS, AS SELECTED BY THE CONTRACTOR.
5. STAINLESS STEEL PIPE AND FITTINGS ARE AN ACCEPTABLE ALTERNATIVE TO DUCTILE IRON PIPE AND FITTINGS.

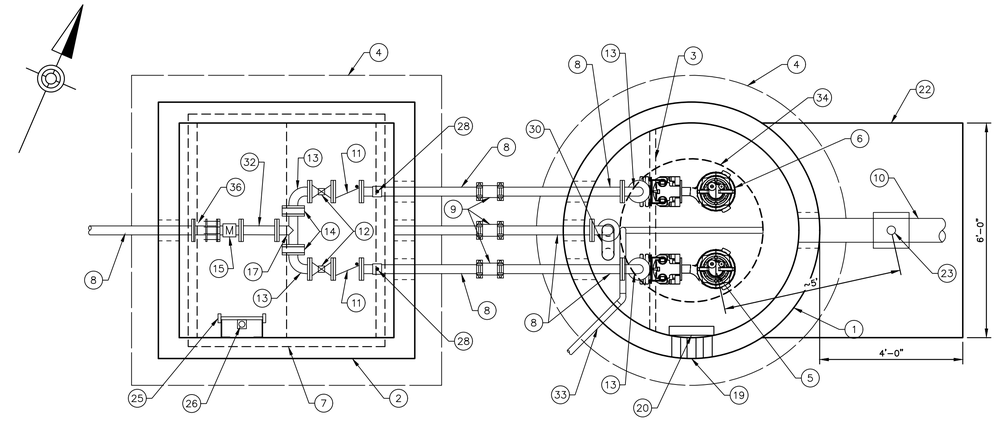

PUMP STATION PLAN

SCALE: 1/2" = 1'-0"

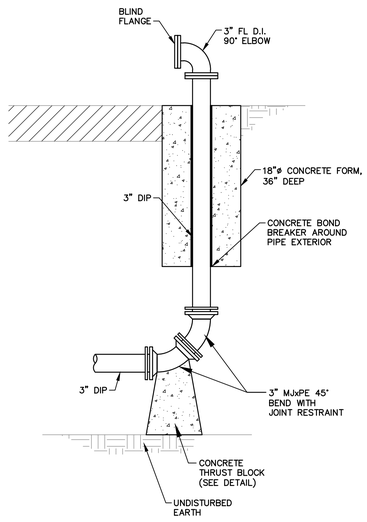

ELEVATION

BYPASS PUMPING CONNECTION TO FORCE MAIN

NOT TO SCALE

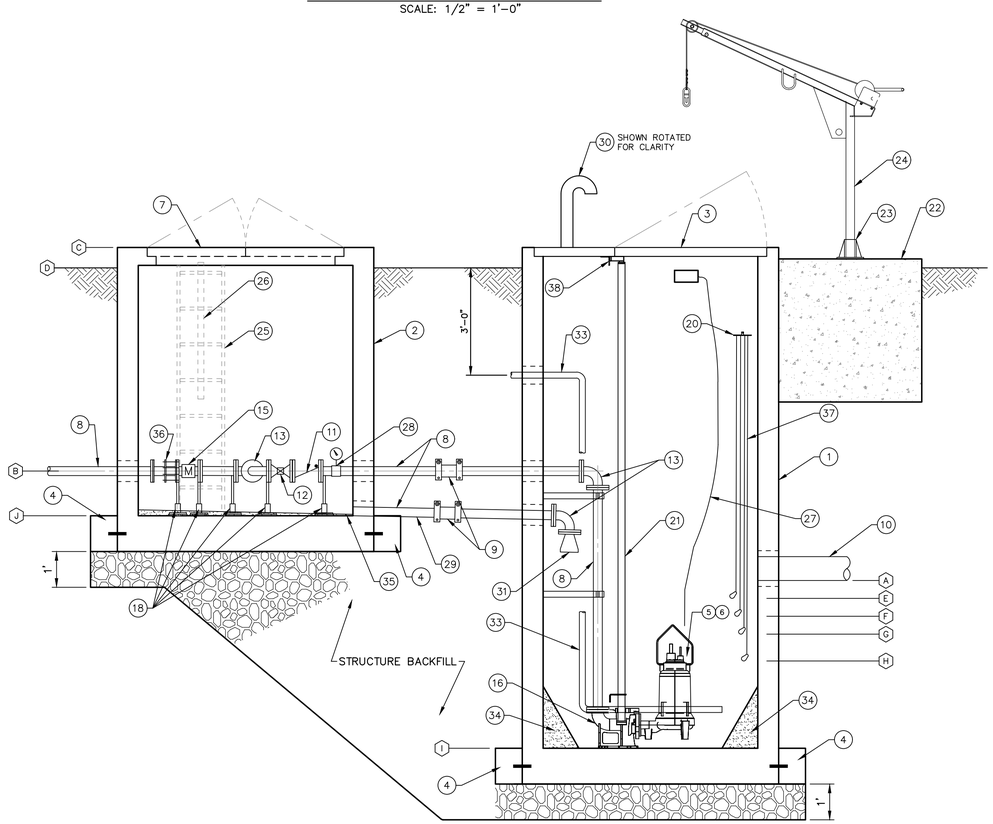

SECTIONAL ELEVATION

SCALE: 1/2" = 1'-0"

1' 0' 1' 2'

SCALE: 1/2"=1'-0"

DESIGN SCHEDULE

DESIGNATION	DESCRIPTION	CREEK ROAD PUMP STATION
A	8"ø DIP INFLUENT SEWER INVERT ELEV	408.94'
B	3"ø PUMP HEADER/DISCHARGE FORCE MAIN ℄ ELEV	412.00'
C	TOP OF WET WELL/VALVE VAULT	418.25'
D	FINISH GRADE AT WET WELL	417.68'
E	HIGH WATER ALARM FLOAT ELEV	408.44'
F	LAG PUMP ON FLOAT ELEV	407.94'
G	LEAD PUMP ON FLOAT ELEV	407.44'
H	BOTH PUMPS OFF FLOAT ELEV	406.69'
I	WET WELL BOTTOM ELEV	404.25'
J	VALVE VAULT BOTTOM ELEV	410.75'

KEY NOTES

1. 6'ø (MINIMUM INSIDE DIMENSION) PRECAST CONCRETE WET WELL (H2O RATED) WITH INTEGRAL BASE SLAB
2. 6'x6' (MINIMUM INSIDE DIMENSION) PRECAST CONCRETE VALVE VAULT (H2O RATED) WITH INTEGRAL BASE SLAB
3. 6'ø SINGLE LEAF ALUMINUM HATCH WITH INTEGRAL VENT PIPE IN STATIONARY PORTION OF HATCH
4. CAST-IN-PLACE CONCRETE ANTI-FLOATATION SLAB WITH REBAR ANCHORS INTO WET WELL
5. GRINDER PUMP NO. 1
6. GRINDER PUMP NO. 2
7. 6'x5' DOUBLE LEAF ALUMINUM HATCH
8. 3" D.I. PIPE
9. 3" RESTRAINED COUPLING
10. 8" D.I. INFLUENT GRAVITY SEWER PIPE
11. 3" CHECK VALVE
12. 3" PLUG VALVE WITH WORM GEAR HAND WHEEL OPERATOR
13. 3" D.I. 90° FLANGED ELBOW
14. 3" D.I. FILLER FLANGE
15. 3" MAGNETIC FLOW METER WITH S.S. GROUNDING RINGS
16. PUMP BASE ELBOW
17. 3" D.I. TEE
18. S.S. PIPE SUPPORT
19. CONDUIT PENETRATIONS (COORDINATE LOCATIONS WITH CONTRACT 2022-03)
20. S.S. FLOAT BRACKET (SHOWN ROTATED IN SECTIONAL ELEVATION FOR CLARITY)
21. 2" 316 S.S. PUMP GUIDE RAILS (PROVIDE SUPPORT BRACKETS PER PUMP MANUFACTURER'S RECOMMENDATION)
22. DAVIT CRANE FOUNDATION (SEE DWG. S-6)
23. DAVIT CRANE PEDESTAL BASE
24. DAVIT CRANE
25. ALUMINUM LADDER
26. ALUMINUM LADDER SAFETY POST
27. TWO (2) 304 S.S. 1/4 INCH x 36 FEET WIRE ROPE WITH S.S. SWIVEL HOOK AND SWAGED BALL FITTING. ATTACH ONE TO EACH PUMP.
28. 3"x1" DI SADDLE, 1" S.S. BALL VALVE, 1"ø S.S. PIPE, 1" ISOLATION RING WITH PRESSURE GAUGE AND CAP
29. 3" DI DRAIN. SLOPE AT 2% TOWARD WET WELL.
30. 4" S.S. VENT PIPE (GOOSENECK WITH INSECT SCREEN)
31. 3" FLANGED DUCKBILL CHECK VALVE
32. 3" D.I. FLANGED SPOOL, 1'-0" LONG
33. 2" S.S./SCH 80 PVC AERATION PIPING (TRANSITION TO SCH 80 PVC WITHIN WET WELL)
34. CONCRETE FILLET
35. CONCRETE GROUT FILL SLOPED TO DRAIN PIPE
36. 3" DISMANTLING JOINT
37. (4) FLOAT SWITCHES (HIGH WATER ALARM, LAG ON, LEAD ON, OFF)
38. 3"x3"x¼" 316 S.S. ANGLE, ATTACH TO WET WELL WALLS
39. WALL MOUNTED S.S. PIPE SUPPORT/RETRAINT

NO.	REVISION	DATE	BY
1	ADDENDUM NO. 4	10/14/22	RSF

COMMONWEALTH OF PENNSYLVANIA — REGISTERED PROFESSIONAL — MATTHEW DAVID CICHY — ENGINEER — PE074220

HRG
Herbert, Rowland & Grubic, Inc.
Engineering & Related Services
AN EMPLOYEE-OWNED COMPANY
369 East Park Drive
Harrisburg, PA 17111
(717) 564-1121
Fax (717) 564-1158
hrg@hrg-inc.com
www.hrg-inc.com

HALIFAX AREA
WATER AND SEWER AUTHORITY
203 ARMSTRONG STREET
HALIFAX, PA 17032
(717) 896-8083

CREEK ROAD PUMP STATION
PLAN AND SECTIONAL ELEVATION
FOR
HALIFAX TWP. SANITARY SEWER EXTENSION PROJECT
HALIFAX TOWNSHIP DAUPHIN COUNTY PENNSYLVANIA

PROJ. MGR.	JJM
DESIGN	MDC
CADD	BAB
CHECKED	MDC
SCALE	AS NOTED
DATE	AUG. 2022

DRAWING NO. CR-6
SHEET NO. 46 OF 109
PROJECT 001650.0428

File name: P:\001650\001650_SAR\CAD\Proj Sht\SAR001650028-PRO-CR02.dwg Layout1 Oct 14, 2022-11:32am sfoltz

EXISTING PRIVATE WWTP TO REMAIN IN OPERATION DURING CONSTRUCTION AND UNTIL OWNER ACCEPTS AND OPERATES THE NEW LENKER PUMP STATION. KEEP ALL EQUIPMENT OFF OF THE BURIED WWTP TANKS AND PIPING.

San MH
Rim 563.54
Inv Out 559.86 (Bottom of Box)

DEMOLISH EXISTING MANHOLE

CAP AND ABANDON EXISTING SEWER

EXISTING TREES TO BE CLEARED AND GRUBBED

5/8" Rebar (Fnd)

San MH
Rim 565.24
Inv In 24 Dia Plastic
Inv Out

EXISTING SHED BUILDING CONTAINS BLOWERS AND CONTROLS FOR THE EXISTING PRIVATE WWTP. DISCONNECT AND REMOVE/CAP ALL PIPING AND ELECTRICAL CONNECTIONS AND RELOCATE EXISTING SHED TO ANOTHER LOCATION ON THE PROPERTY AS SELECTED BY THE OWNER.

Elec Meter Elev.

Storm MH
Rim 566.42

San MH
Rim 567.16
Inv In 561.28 (8" PVC)
Inv Out 561.28 (8" PVC)

Inlet
Rim 568.24 (18" SLOPE)

Riser TMH

TEMPORARY CONSTRUCTION EASEMENT

PERMANENT PUMP STATION EASEMENT

PID: 29-020-141
OWNER: DONALD M LENKER
REF: Plan-A-9-33

Gravel Road

Inlet
Rim 571.98
Inv In 567.98 (12" CORRUGATED)
Inv In 567.98 (12" CORRUGATED)
Inv Out 567.78 (18" SLOPED)

EXISTING CONCRETE CURB AND ROADWAY TO BE REMOVED

SAWCUT EXISTING PAVEMENT

Inlet
Rim 571.98
Inv In
Inv Out

GRAPHIC SCALE
10' 5' 0' 10'
SCALE: 1" = 10'

LEGEND

- EXISTING TO BE DEMOLISHED
- EXISTING TREES TO BE CLEARED AND GRUBBED

NOTES:
1. DEMOLISH EXISTING MANHOLE BY REMOVING AND BACKFILL WITH SUITABLE BACKFILL. BACKFILL MATERIAL PER SECTION 31 05 13 OF THE CONTRACT DOCUMENTS.

File name: P:\2021\001650.2428\CSD\Plan Sets\ANW\001650428-SHEET001.dwg Layout:L1 Sep 12, 2022-11:09am khecht

NO.	REVISION	DATE	BY

COMMONWEALTH OF PENNSYLVANIA — REGISTERED PROFESSIONAL — MATTHEW DAVID CICHY — ENGINEER PE074220

HRG
Herbert, Rowland & Grubic, Inc.
Engineering & Related Services
AN EMPLOYEE-OWNED COMPANY

369 East Park Drive
Harrisburg, PA 17111
(717) 564-1121
Fax (717) 564-1158
hrg@hrg-inc.com
www.hrg-inc.com

HALIFAX AREA
WATER AND SEWER AUTHORITY
203 ARMSTRONG STREET
HALIFAX, PA 17032
(717) 896-8083

LENKER PUMP STATION
EXISTING CONDITIONS AND DEMOLITION SITE PLAN
FOR
HALIFAX TWP. SANITARY SEWER EXTENSION PROJECT
HALIFAX TOWNSHIP **DAUPHIN COUNTY** **PENNSYLVANIA**

PROJ. MGR. –	JJM
DESIGN–	MDC
CADD–	BAB
CHECKED–	
SCALE–	AS NOTED
DATE–	AUG. 2022

DRAWING NO.
L-1
SHEET NO.
47 OF 109
PROJECT 001650.0428

LEGEND

N.A.G. S-75 EROSION CONTROL BLANKET (OR EQUAL) WITH BIODEGRADABLE STAPLES

12" COMPOST FILTER SOCK (TYP.)

MH-121

MH-120

WW-2

Ex-MH Lenker

5/8" Rebar (Fnd)

Storm MH Rim 566.42

Elec. Meter Box

Elec. Box

Vault (Typ.)

Gravel Road

Woods

Meadow

Pasture

Fence

Top of Bank

Edge of Water

Rim 563.54

Inv Out 559.86 (Bottom of Box)

Rim 565.24

Inv In 24 Dia Plastic

Inv Out

Rim 567.16

Inv In 561.28 (8" PVC)

Inv Out 561.28 (8" PVC)

Rim 569.44

Inv In 561.44 (18" RCPP)

Inv Out

Rim 569.88

Inv In

Inv Out

PID: 29-020-141

OWNER: DONALD M LENKER

REF: Plan:A-9-33

CkD2

ClB2

CkC2

N.A.G. S-75 EROSION CONTROL BLANKET (OR EQUAL) WITH BIODEGRADABLE STAPLES

12" COMPOST FILTER SOCK (TYP.)

TOPSOIL STOCKPILE

TEMPORARY ROCK CONSTRUCTION ENTRANCE

200+00

201+00

202+00

203+00

GRAPHIC SCALE

10' 5' 0' 10'

SCALE: 1" = 10'

NO.	REVISION	DATE	BY

COMMONWEALTH OF PENNSYLVANIA
REGISTERED PROFESSIONAL
MATTHEW DAVID CICHY
ENGINEER PE074220

HRG
Herbert, Rowland & Grubic, Inc.
Engineering & Related Services
AN EMPLOYEE-OWNED COMPANY

369 East Park Drive
Harrisburg, PA 17111
(717) 564-1121
Fax (717) 564-1158
hrg@hrg-inc.com
www.hrg-inc.com

HALIFAX AREA WATER AND SEWER AUTHORITY
203 ARMSTRONG STREET
HALIFAX, PA 17032
(717) 896-8083

LENKER PUMP STATION
EROSION AND SEDIMENTATION CONTROL SITE PLAN
FOR
HALIFAX TWP. SANITARY SEWER EXTENSION PROJECT
HALIFAX TOWNSHIP DAUPHIN COUNTY PENNSYLVANIA

PROJ. MGR.	JJM
DESIGN	MDC
CADD	BAB
CHECKED	
SCALE	AS NOTED
DATE	AUG. 2022

DRAWING NO. **L-2**
SHEET NO. **48** OF **109**
PROJECT 001650.0428

File name: P:\2016\001650\2-CAD\CSD\Plan Sets\ASA\MOD50042E-S-LENKER.dwg Layout: ESC Sep 02, 2022 - 11:10am xfant

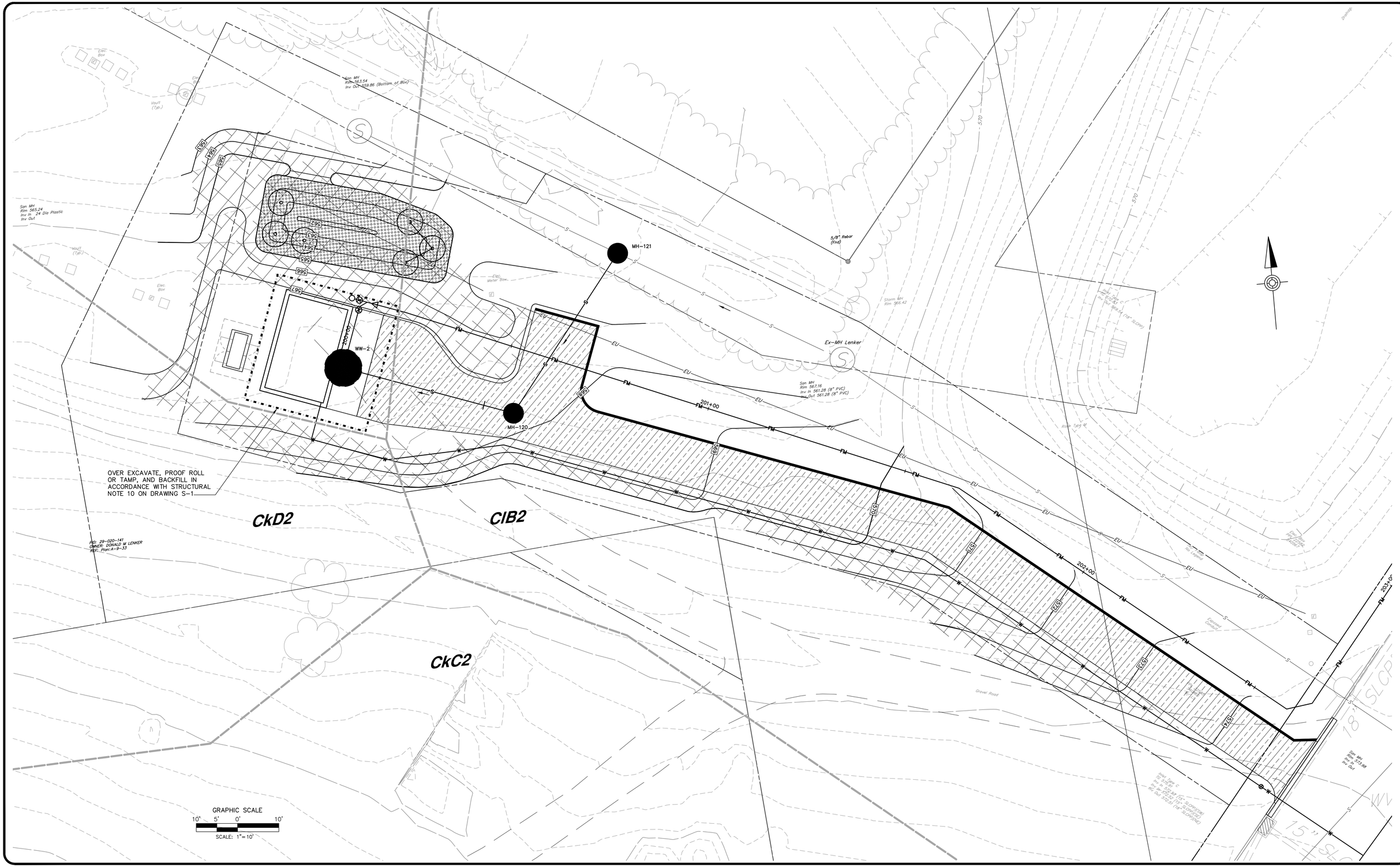

NO.	REVISION	DATE	BY

COMMONWEALTH OF PENNSYLVANIA
REGISTERED PROFESSIONAL
MATTHEW DAVID CICHY
ENGINEER
PE074220

HRG
Herbert, Rowland & Grubic, Inc.
Engineering & Related Services
AN EMPLOYEE-OWNED COMPANY

369 East Park Drive
Harrisburg, PA 17111
(717) 564-1121
Fax (717) 564-1158
hrg@hrg-inc.com
www.hrg-inc.com

HALIFAX AREA
WATER AND SEWER AUTHORITY
203 ARMSTRONG STREET
HALIFAX, PA 17032
(717) 896-8083

LENKER PUMP STATION
SITE PREPARATION PLAN
FOR
HALIFAX TWP. SANITARY SEWER EXTENSION PROJECT
HALIFAX TOWNSHIP DAUPHIN COUNTY PENNSYLVANIA

PROJ. MGR. – JJM	
DESIGN–	MDC
CADD–	BAB
CHECKED–	
SCALE–	AS NOTED
DATE–	AUG. 2022

DRAWING NO.
L-3
SHEET NO.
49 OF 109
PROJECT 001650.0428

LEGEND

PUMP STATION PAVEMENT (1)

RAIN GARDEN SEEDING MIX

NOTES:
1. RESTORE ALL DISTURBED AREA WITH 6" OF SCREENED TOPSOIL, SEEDING, MULCH, AND FERTILIZER IN ACCORDANCE WITH THE CONTRACT DOCUMENTS. (2)
2. GRADING IN THE AREA OF THE EXISTING WWTP SHALL NOT OCCUR UNTIL AFTER THE LENKER PUMP STATION IS OPERATIONAL, AND DIRECTED BY THE ENGINEER.

GRAPHIC SCALE
10' 5' 0' 10'
SCALE: 1"=10'

BOTTOM TO BE SEEDED WITH RAIN GARDEN MIX AND SHRUBBERY
SPILLWAY ELEVATION 564.75'
RAIN GARDEN 1 FLOOR ELEV. 562.00'
San MH Rim 563.54 Inv Out 559.86 (Bottom of Box)
San MH Rim 565.24 Inv In 24 Dia Plastic Inv Out
MH-121
MH-120
WW-2
Ex-MH Lenker
5/8" Rebar (Fnd)
Storm MH Rim 566.42
San MH Rim 567.16 Inv In 561.28 (8" PVC) Inv Out 561.28 (8" PVC)
567.00
567.25
567.50
BITUMINOUS ROLLED CURB (1)
TEMPORARY CONSTRUCTION EASEMENT
PERMANENT PUMP STATION EASEMENT
NEW CONCRETE VERTICAL CURB (1)
NEW CONCRETE DEPRESSED CURB AT DRIVEWAY
NEW MUNICIPAL PAVEMENT TO MEET THE EDGE OF THE EXISTING PAVEMENT
NEW CONCRETE VERTICAL CURB
PID: 29-020-141
OWNER: DONALD M LENKER
DEED BK: Plan: A-9-33

COORDINATE DATA

#	DESC.	NORTHING	EASTING	DESCRIPTION
100	CP-L1	405909.36	2194209.71	CENTER OF WET WELL
101	CP-L2	405900.00	2194204.72	SE CORNER OF BUILDING
102	CP-L3	405905.68	2194189.05	SW CORNER OF BUILDING
103	CP-L4	405929.50	2194197.69	NW CORNER OF BUILDING
104	CP-L5	405923.81	2194213.35	NE CORNER OF BUILDING
105	CP-L6	405915.75	2194184.48	CENTER OF GENERATOR PAD
106	CP-L7	405784.90	2194425.07	EDGE OF DRIVEWAY
107	CP-L8	405790.36	2194423.72	EDGE OF DRIVEWAY
108	CP-L9	405852.52	2194346.94	EDGE OF DRIVEWAY
109	CP-L10	405888.47	2194249.58	EDGE OF DRIVEWAY
110	CP-L11	405888.89	2194248.13	EDGE OF DRIVEWAY
111	CP-L12	405894.85	2194219.22	EDGE OF DRIVEWAY
112	CP-L13	405895.24	2194217.83	EDGE OF DRIVEWAY
113	CP-L14	405897.38	2194211.92	EDGE OF DRIVEWAY

COORDINATE DATA

#	DESC.	NORTHING	EASTING	DESCRIPTION
114	CP-L15	405921.20	2194220.56	EDGE OF DRIVEWAY
115	CP-L16	405918.81	2194227.15	EDGE OF DRIVEWAY
116	CP-L17	405914.70	2194232.22	EDGE OF DRIVEWAY
117	CP-L18	405908.48	2194236.10	EDGE OF DRIVEWAY
118	CP-L19	405904.39	2194241.12	EDGE OF DRIVEWAY
119	CP-L20	405902.68	2194245.76	EDGE OF DRIVEWAY
120	CP-L21	405905.63	2194252.18	EDGE OF DRIVEWAY
121	CP-L22	405919.71	2194257.37	EDGE OF DRIVEWAY
122	CP-L23	405914.16	2194272.38	EDGE OF DRIVEWAY
123	CP-L24	405900.09	2194267.19	EDGE OF DRIVEWAY
124	CP-L25	405893.67	2194270.15	EDGE OF DRIVEWAY
125	CP-L26	405863.09	2194352.95	EDGE OF DRIVEWAY
126	CP-L27	405799.69	2194431.27	EDGE OF DRIVEWAY
127	CP-L28	405799.33	2194436.83	EDGE OF DRIVEWAY

NO.	REVISION	DATE	BY
2	ADDENDUM NO. 2	10/5/22	RSF
1	ADDENDUM NO. 1	9/23/22	RSF

COMMONWEALTH OF PENNSYLVANIA REGISTERED PROFESSIONAL ENGINEER MATTHEW DAVID CICHY PE074220

HRG Herbert, Rowland & Grubic, Inc. Engineering & Related Services
AN EMPLOYEE-OWNED COMPANY
369 East Park Drive
Harrisburg, PA 17111
(717) 564-1121
Fax (717) 564-1158
hrg@hrg-inc.com
www.hrg-inc.com

HALIFAX AREA WATER AND SEWER AUTHORITY
203 ARMSTRONG STREET
HALIFAX, PA 17032
(717) 896-8083

LENKER PUMP STATION
SITE GRADING AND SURFACING PLAN
FOR
HALIFAX TWP. SANITARY SEWER EXTENSION PROJECT
HALIFAX TOWNSHIP DAUPHIN COUNTY PENNSYLVANIA

PROJ. MGR. –	JJM
DESIGN–	MDC
CADD–	BAB
CHECKED–	
SCALE–	AS NOTED
DATE–	AUG. 2022

DRAWING NO. **L-4**
SHEET NO. **50** OF **109**
PROJECT 001650.0428

File name: P:\2001\001650.0428\CAD\Site Sht\SAN\001650428-SHLENKER.dwg Layout: QR Oct 05, 2022 - 3:33pm ebbott

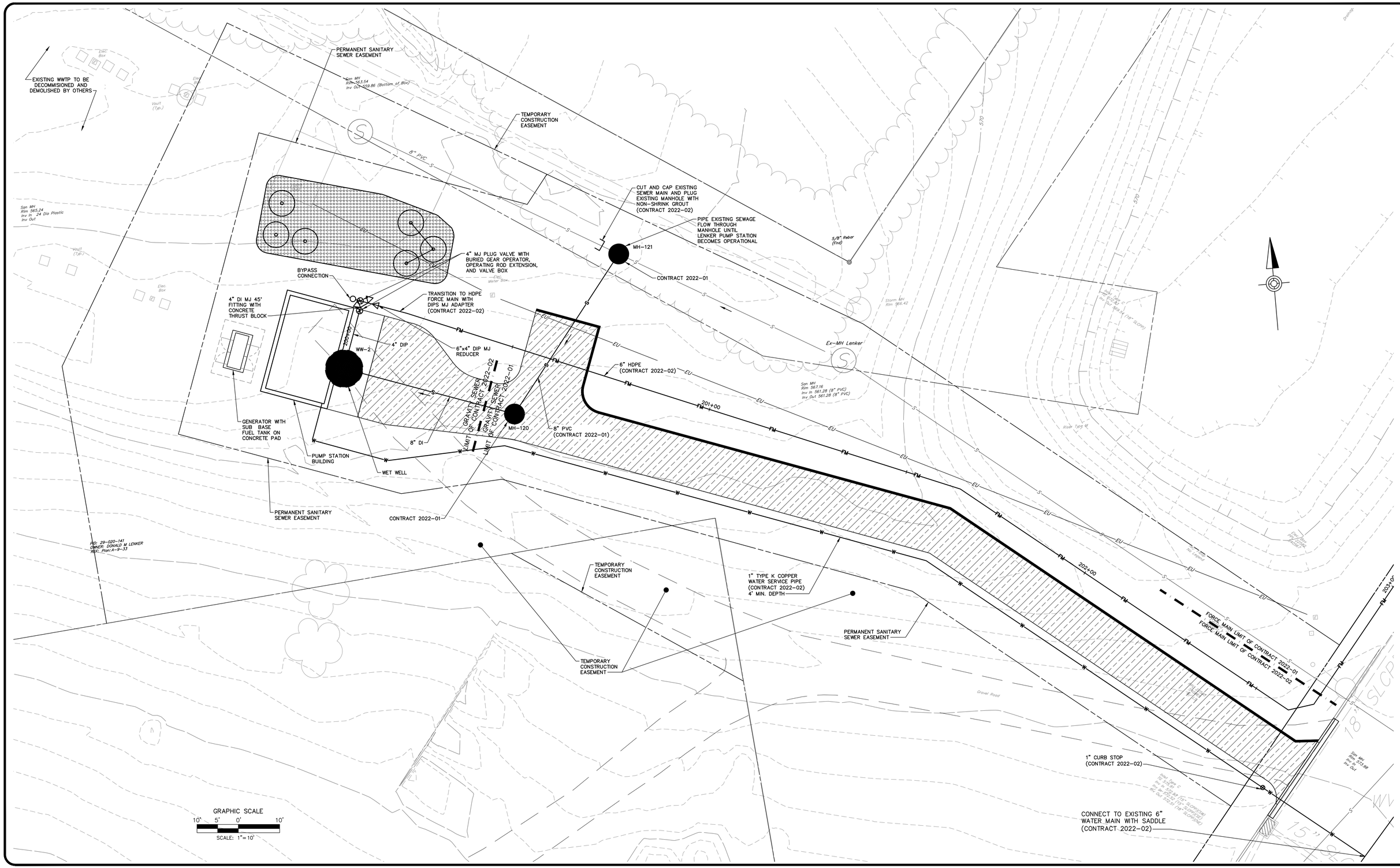

NO.	REVISION	DATE	BY

COMMONWEALTH OF PENNSYLVANIA
REGISTERED PROFESSIONAL
MATTHEW DAVID CICHY
ENGINEER
PE074220

HRG
Herbert, Rowland & Grubic, Inc.
Engineering & Related Services
AN EMPLOYEE-OWNED COMPANY
369 East Park Drive
Harrisburg, PA 17111
(717) 564-1121
Fax (717) 564-1158
hrg@hrg-inc.com
www.hrg-inc.com

HALIFAX AREA
WATER AND SEWER AUTHORITY
203 ARMSTRONG STREET
HALIFAX, PA 17032
(717) 896-8083

LENKER PUMP STATION
PROPOSED SITE PLAN
FOR
HALIFAX TWP. SANITARY SEWER EXTENSION PROJECT
HALIFAX TOWNSHIP DAUPHIN COUNTY PENNSYLVANIA

PROJ. MGR. – JJM	
DESIGN– MDC	
CADD– BAB	
CHECKED–	
SCALE– AS NOTED	
DATE– AUG. 2022	

DRAWING NO.
L-5
SHEET NO.
51 OF 109
PROJECT 001650.0428

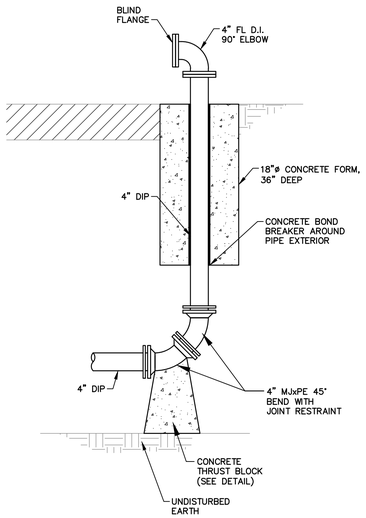

ELEVATION

BYPASS PUMPING
CONNECTION TO FORCE MAIN
NOT TO SCALE

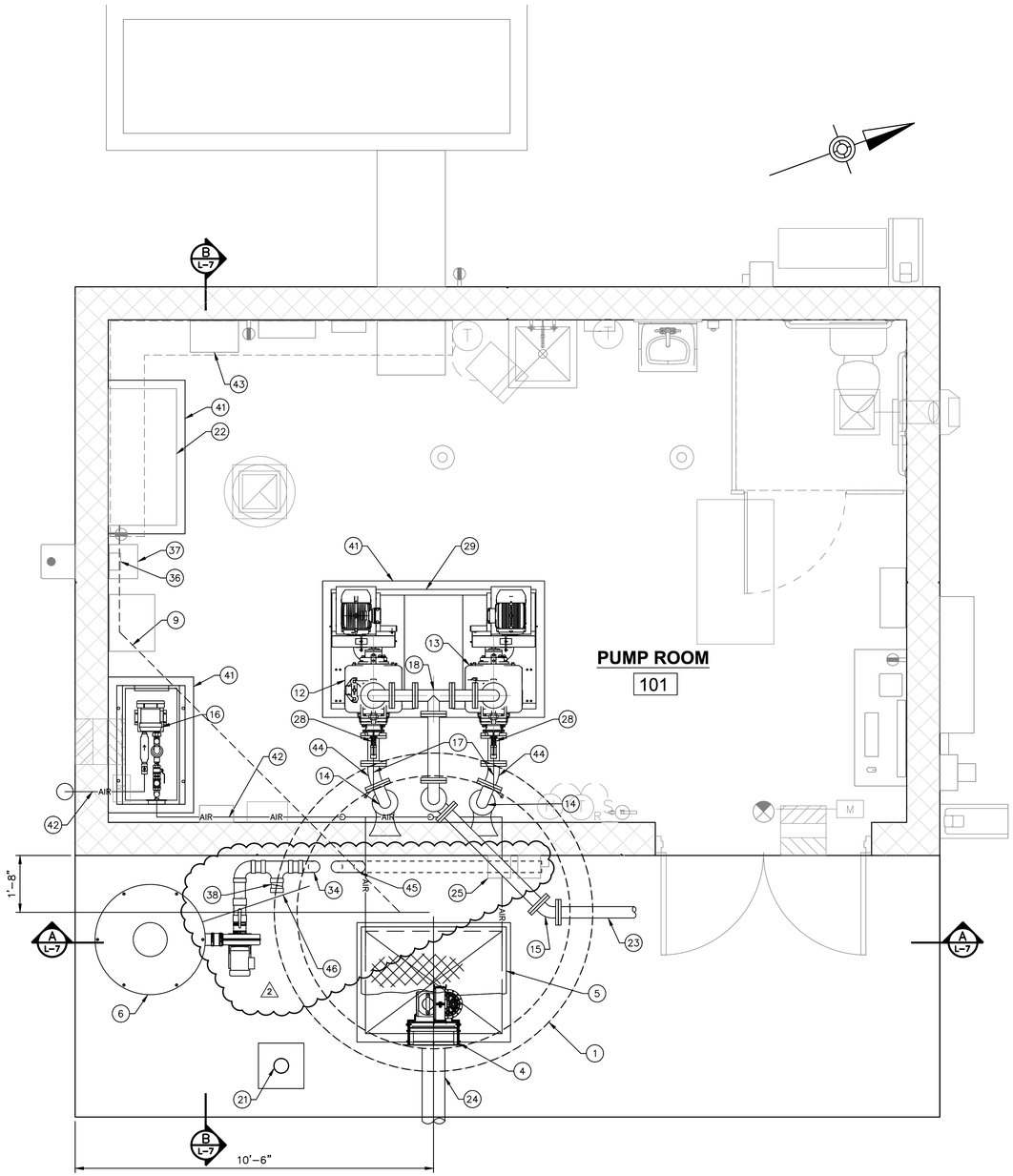

PUMP STATION PLAN
SCALE: 1/2" = 1'-0"

1' 0' 1' 2'
SCALE: 1/2"=1'-0"

NOTES:

1. ALL HARDWARE, BRACKETS, COMPONENTS, RAILS, SUPPORTS, AND ANCHORS IN WET WELL SHALL BE STAINLESS STEEL.
2. ALL PIPE PENETRATIONS SHALL BE PROVIDED WITH FLEXIBLE GASKETS OR LINK SEALS.
3. ALL PIPE AND FITTINGS IN THE WET WELL AND BUILDING SHALL BE EITHER FLANGED OR GROOVED CONNECTIONS, AS SELECTED BY THE CONTRACTOR.
4. STAINLESS STEEL PIPE AND FITTINGS ARE AN ACCEPTABLE ALTERNATIVE TO DUCTILE IRON PIPE AND FITTINGS.

KEY NOTES

1. 8'ø I.D. (MINIMUM) PRECAST CONCRETE WET WELL (H20 RATED WITH INTEGRAL BASE SLAB
2. CAST IN PLACE CONCRETE SLAB
3. CONCRETE FILLET, TO REMAIN BELOW PUMP OFF ELEVATION. SLOPE FLOOR TO PUMP INLETS.
4. SEWAGE GRINDER WITH CUSTOM WALL FRAME AND SLIDE RAIL SYSTEM PER MANUFACTURER'S RECOMMENDATIONS. INSTALL TOP OF CUTTER AT CENTERLINE OF INFLUENT SEWER.
5. 36"x48" SINGLE LEAF ALUMINUM ACCESS HATCH
6. ODOR CONTROL SYSTEM
7. MODULAR SEAL
8. 4" FLANGE AND FLARE 90° ELBOW
9. 1" S.S. 80 PVC BUBBLER LINE TO WET WELL (RUN BELOW CONCRETE SLAB)
10. S.S. PIPE SUPPORT
11. 3/8" SCH. 80 PVC BUBBLER LINE
12. PUMP NO. 1
13. PUMP NO. 2
14. 4" DI 90° ELBOW
15. 4" DI 45° ELBOW
16. WET WELL AERATION UNIT. INTAKE PIPE TO BE EXTENDED TO BUILDING EXTERIOR AND LOCATED A MIN. OF 36" ABOVE FINISHED GRADE.
17. 1 1/2" SS AIR RELEASE TO WET WELL
18. 4" DI TEE
19. 4" PLUG VALVE
20. 4" MAGNETIC FLOW METER (PROVIDE MIN. 12" SPOOL UPSTREAM AND 6" SPOOL DOWNSTREAM)
21. DAVIT CRANE PEDESTAL BASE
22. PUMP CONTROL PANEL
23. 4" DI PIPE
24. 8" DI INFLUENT GRAVITY SEWER PIPE
25. FLOAT JUNCTION BOX
26. BUBBLER AIR BELL
27. 4" DI SUCTION PIPE
28. AIR RELEASE VALVE AND BALL VALVE
29. PUMP SKID
30. 11/16" x 3" SLOT (TYP. 12)
31. ANCHOR BOLTS (TYP. 12)
32. FLOAT SWITCH
33. S.S. SLIDE RAILS
34. 4"ø SCH 80 PVC VENT PIPE WITH S.S. PIPE SUPPORT. CONNECT TO ODOR CONTROL SYSTEM. SLOPE TO WET WELL. EXTEND PIPE TO INVERT IN ELEVATION. (2)
35. 2" SCH 80 PVC AERATION PIPING
36. MAGNETIC FLOW METER TRANSMITTER
37. AUTODIALER
38. 4" SCH 80 PVC TEE AND BUTTERFLY VALVE
39. 4" CHECK VALVE
40. CAST-IN-PLACE CONCRETE ANTI-FLOATATION SLAB WITH REBAR ANCHORS INTO WET WELL.
41. HOUSEKEEPING PAD
42. 2" S.S./SCH 80 PVC AERATION PIPING (TRANSITION TO SCH 80 PVC WITH THE WET WELL)
43. SEWAGE GRINDER CONTROL PANEL
44. 4" DI 22½° ELBOW
45. 4" DIA. SCH 80 PVC VENT INTAKE PIPE WITH INVERTED GOOSENECK AND S.S. BIRD SCREEN. EXTEND PIPE TO OPPOSITE CORNER OF WET WELL FROM VENT DISCHARGE PIPE AND PROVIDE S.S. PIPE SUPPORTS. (2)
46. 1/2" DIA. SCH 80 PVC DRAIN PIPE. SLOPE TO AND DISCHARGE INTO WET WELL.

NO.	REVISION	DATE	BY
2	PROPOSAL REQUEST NO. 1	3/28/23	RSF
1	ADDENDUM NO. 4	10/14/22	RSF

COMMONWEALTH OF PENNSYLVANIA — REGISTERED PROFESSIONAL — MATTHEW DAVID CICHY — ENGINEER PE074220

HRG
Herbert, Rowland & Grubic, Inc.
Engineering & Related Services
AN EMPLOYEE-OWNED COMPANY
369 East Park Drive
Harrisburg, PA 17111
(717) 564-1121
Fax (717) 564-1158
hrg@hrg-inc.com
www.hrg-inc.com

HALIFAX AREA
WATER AND SEWER AUTHORITY
203 ARMSTRONG STREET
HALIFAX, PA 17032
(717) 896-8083

LENKER PUMP STATION
PLAN
FOR
HALIFAX TWP. SANITARY SEWER EXTENSION PROJECT
HALIFAX TOWNSHIP DAUPHIN COUNTY PENNSYLVANIA

PROJ. MGR. –	JJM
DESIGN–	MDC
CADD–	BAB
CHECKED–	MDC
SCALE–	AS NOTED
DATE–	AUG. 2022

DRAWING NO.
L-6
SHEET NO.
52 OF **109**
PROJECT 001650.0428

File name: P:\2001\001650.0428\1230\Plan Sets\SAN\WD001650428-PRO-LENKER.dwg Layout: P-1 Mar 28, 2023 - 2:16pm sfoltz

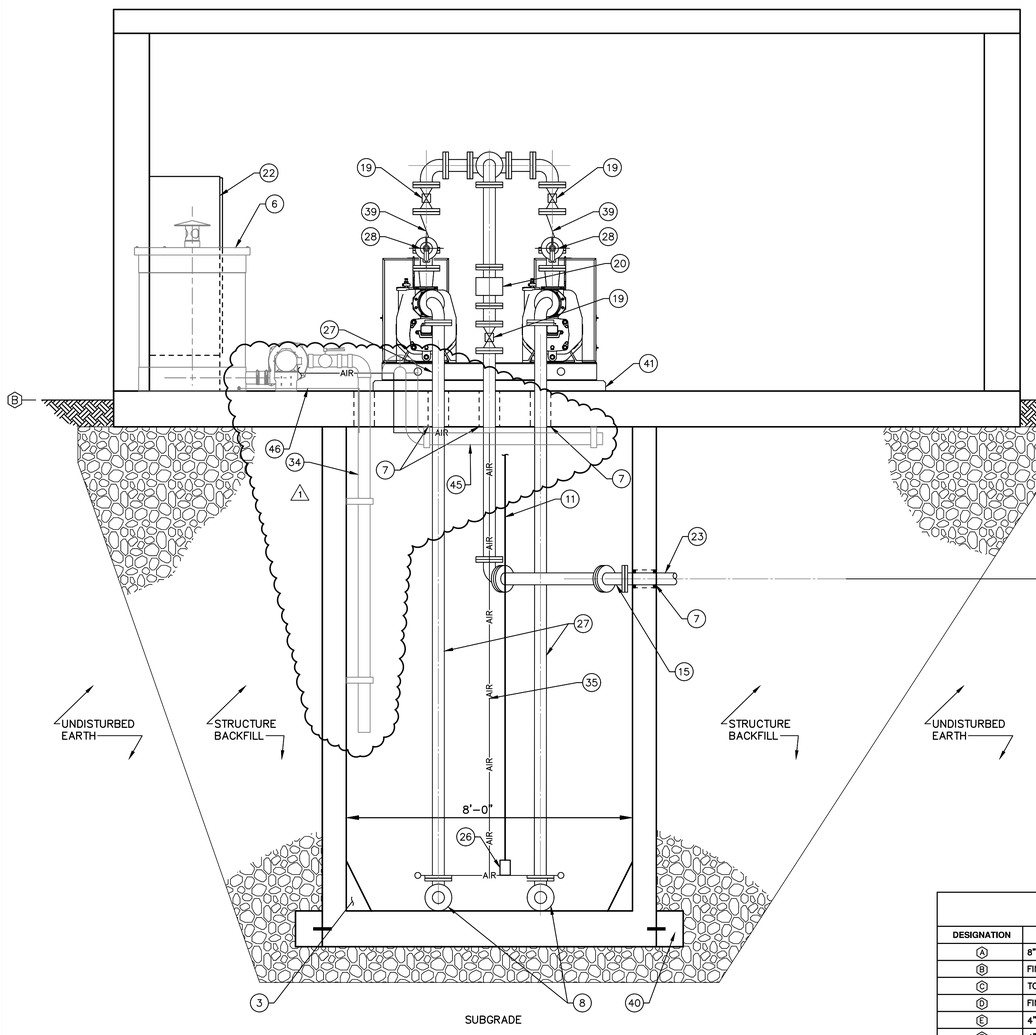

SECTION A-A

SCALE: 1/2" = 1'-0"

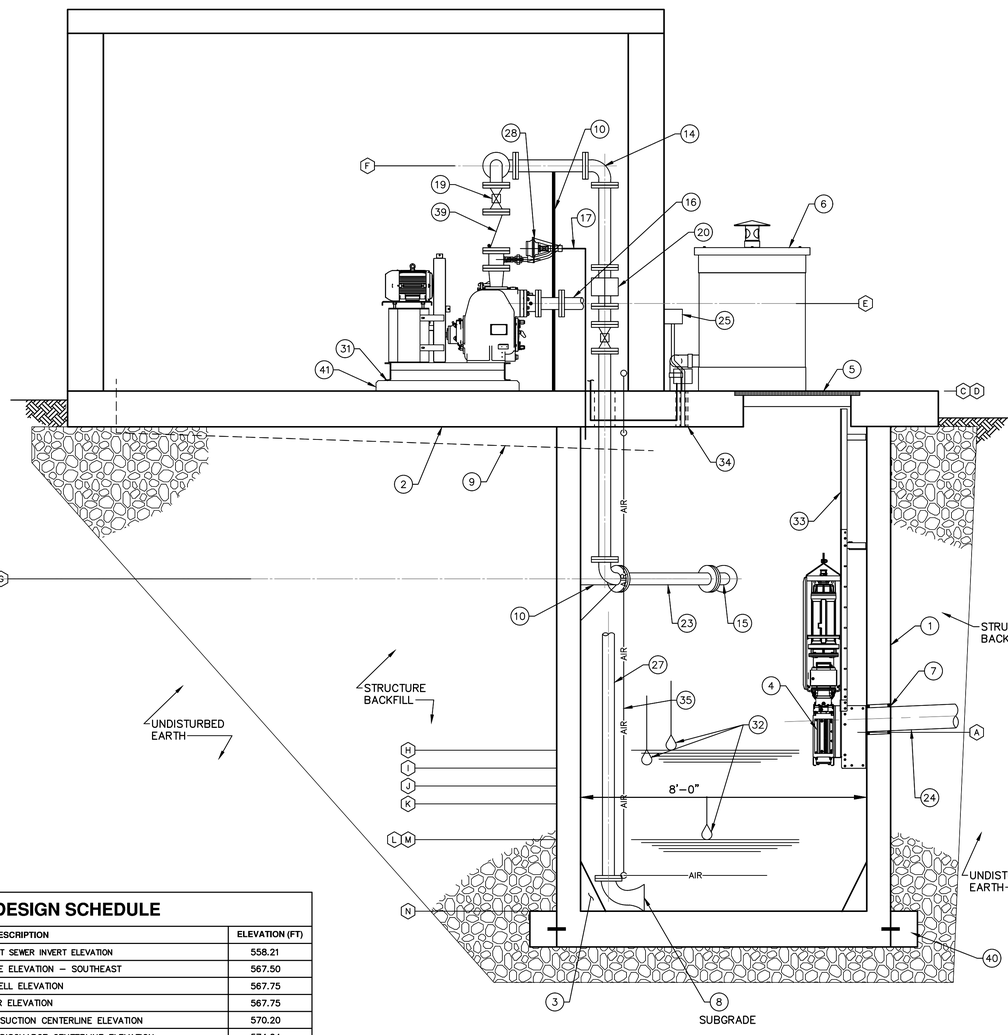

SECTION B-B

SCALE: 1/2" = 1'-0"

DESIGN SCHEDULE

DESIGNATION	DESCRIPTION	ELEVATION (FT)
A	8"ø DIP INFLUENT SEWER INVERT ELEVATION	558.21
B	FINISHED GRADE ELEVATION – SOUTHEAST	567.50
C	TOP OF WET WELL ELEVATION	567.75
D	FINISHED FLOOR ELEVATION	567.75
E	4"ø DIP PUMP SUCTION CENTERLINE ELEVATION	570.20
F	4"ø DIP PUMP DISCHARGE CENTERLINE ELEVATION	574.04
G	4"ø DIP FORCE MAIN DISCHARGE CENTERLINE ELEVATION	562.50
H	HIGH WATER ALARM ON (FLOAT) ELEVATION	557.71
I	HIGH WATER ALARM – (BUBBER)/PUMP ON (FLOAT)	557.21
J	LAG PUMP ON (BUBBLER) ELEVATION	556.71
K	LEAD PUMP ON (BUBBLER) ELEVATION	556.21
L	BOTH PUMPS OFF (BUBBLER) ELEVATION	555.21
M	BOTH PUMPS OFF (FLOAT) ELEVATION	555.21
N	WET WELL BOTTOM ELEVATION	553.21
O	FINISHED GRADE ELEVATION – NORTHWEST	567.00

1' 0' 1' 2'

SCALE: 1/2"=1'-0"

KEY NOTES

1. 8'ø I.D. (MINIMUM) PRECAST CONCRETE WET WELL (H20 RATED WITH INTEGRAL BASE SLAB
2. CAST IN PLACE CONCRETE SLAB
3. CONCRETE FILLET, TO REMAIN BELOW PUMP OFF ELEVATION. SLOPE FLOOR TO PUMP INLETS.
4. SEWAGE GRINDER WITH CUSTOM WALL FRAME AND SLIDE RAIL SYSTEM PER MANUFACTURER'S RECOMMENDATIONS. INSTALL TOP OF CUTTER AT CENTERLINE OF INFLUENT SEWER.
5. 36"x48" SINGLE LEAF ALUMINUM ACCESS HATCH
6. ODOR CONTROL SYSTEM
7. MODULAR SEAL
8. 4" FLANGE AND FLARE 90° ELBOW
9. 1" S.S. 80 PVC BUBBLER LINE TO WET WELL (RUN BELOW CONCRETE SLAB)
10. S.S. PIPE SUPPORT
11. 3/8" SCH. 80 PVC BUBBLER LINE
12. PUMP NO. 1
13. PUMP NO. 2
14. 4" DI 90° ELBOW
15. 4" DI 45° ELBOW
16. WET WELL AERATION UNIT. INTAKE PIPE TO BE EXTENDED TO BUILDING EXTERIOR AND LOCATED A MIN. OF 36" ABOVE FINISHED GRADE.
17. 1 1/2" SS AIR RELEASE TO WET WELL
18. 4" DI TEE
19. 4" PLUG VALVE
20. 4" MAGNETIC FLOW METER (PROVIDE MIN. 12" SPOOL UPSTREAM AND 6" SPOOL DOWNSTREAM)
21. DAVIT CRANE PEDESTAL BASE
22. PUMP CONTROL PANEL
23. 4" DI PIPE
24. 8" DI INFLUENT GRAVITY SEWER PIPE
25. FLOAT JUNCTION BOX
26. BUBBLER AIR BELL
27. 4" DI SUCTION PIPE
28. AIR RELEASE VALVE AND BALL VALVE
29. PUMP SKID
30. 11/16" x 3" SLOT (TYP. 12)
31. ANCHOR BOLTS (TYP. 12)
32. FLOAT SWITCH
33. S.S. SLIDE RAILS
34. 4"ø SCH 80 PVC VENT PIPE WITH S.S. PIPE SUPPORT. CONNECT TO ODOR CONTROL SYSTEM. SLOPE TO WET WELL. EXTEND PIPE TO INVERT IN ELEVATION. (1)
35. 2" SCH 80 PVC AERATION PIPING
36. MAGNETIC FLOW METER TRANSMITTER
37. AUTODIALER
38. 4" SCH 80 PVC TEE AND BUTTERFLY VALVE
39. 4" CHECK VALVE
40. CAST-IN-PLACE CONCRETE ANTI-FLOATATION SLAB WITH REBAR ANCHORS INTO WET WELL.
41. HOUSEKEEPING PAD
42. 2" S.S./SCH 80 PVC AERATION PIPING (TRANSITION TO SCH 80 PVC WITH THE WET WELL)
43. SEWAGE GRINDER CONTROL PANEL
44. 4" DI 22½° ELBOW
45. 4" DIA. SCH 80 PVC VENT INTAKE PIPE WITH INVERTED GOOSENECK AND S.S. BIRD SCREEN. EXTEND PIPE TO OPPOSITE CORNER OF WET WELL FROM VENT DISCHARGE PIPE AND PROVIDE S.S. PIPE SUPPORTS. (1)
46. 1/2" DIA. SCH 80 PVC DRAIN PIPE. SLOPE TO AND DISCHARGE INTO WET WELL.

NO.	REVISION	DATE	BY
1	PROPOSAL REQUEST NO. 1	3/28/23	RSF

COMMONWEALTH OF PENNSYLVANIA REGISTERED PROFESSIONAL MATTHEW DAVID CICHY ENGINEER PE074220

HRG
Herbert, Rowland & Grubic, Inc.
Engineering & Related Services
AN EMPLOYEE-OWNED COMPANY
369 East Park Drive
Harrisburg, PA 17111
(717) 564-1121
Fax (717) 564-1158
hrg@hrg-inc.com
www.hrg-inc.com

HALIFAX AREA
WATER AND SEWER AUTHORITY
203 ARMSTRONG STREET
HALIFAX, PA 17032
(717) 896-8083

LENKER PUMP STATION
SECTIONS
FOR
HALIFAX TWP. SANITARY SEWER EXTENSION PROJECT
HALIFAX TOWNSHIP DAUPHIN COUNTY PENNSYLVANIA

PROJ. MGR. –	JJM
DESIGN–	MDC
CADD–	BAB
CHECKED–	MDC
SCALE–	AS NOTED
DATE–	AUG. 2022

DRAWING NO. L-7
SHEET NO. 53 OF 109
PROJECT 001650.0428

File name: P:\2001\001650-2428\CAD\Plan Sets\SAN\001650428-PRO-L07A03.dwg Layout:P-2 Mar 28, 2023 - 2:17pm jmelott

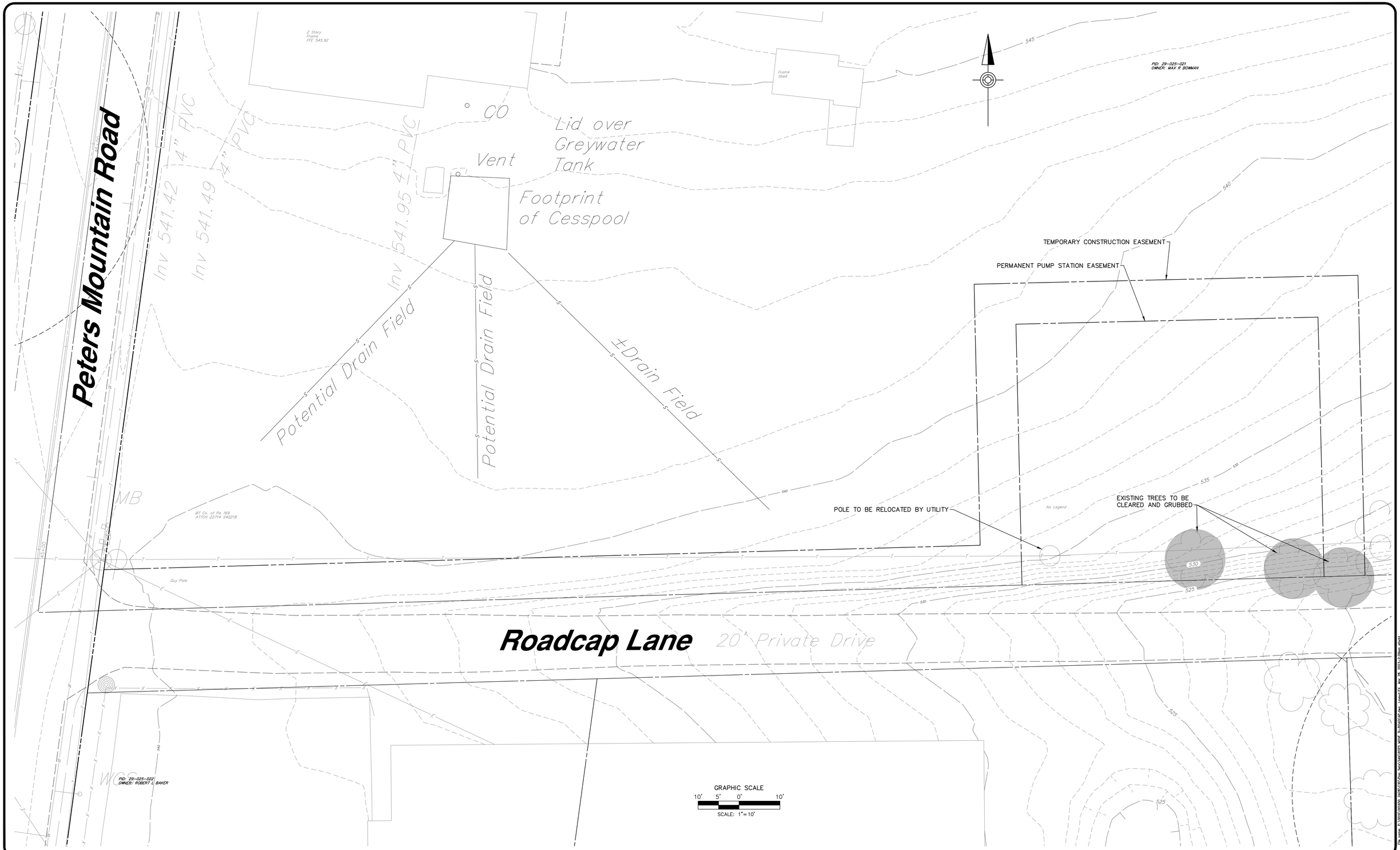

NO.	REVISION	DATE	BY
1	CHANGE ORDER NO. 1	3/6/23	RSF

COMMONWEALTH OF PENNSYLVANIA
REGISTERED PROFESSIONAL
MATTHEW DAVID CICHY
ENGINEER
PE074220

HRG
Herbert, Rowland & Grubic, Inc.
Engineering & Related Services
AN EMPLOYEE-OWNED COMPANY
369 East Park Drive
Harrisburg, PA 17111
(717) 564-1121
Fax (717) 564-1158
hrg@hrg-inc.com
www.hrg-inc.com

HALIFAX AREA
WATER AND SEWER AUTHORITY
203 ARMSTRONG STREET
HALIFAX, PA 17032
(717) 896-8083

ROADCAP LANE PUMP STATION
EXISTING CONDITIONS AND DEMOLITION SITE PLAN
FOR
HALIFAX TWP. SANITARY SEWER EXTENSION PROJECT
HALIFAX TOWNSHIP DAUPHIN COUNTY PENNSYLVANIA

PROJ. MGR. – JJM
DESIGN– MDC
CADD– BAB
CHECKED–
SCALE– AS NOTED
DATE– AUG. 2022

DRAWING NO.
RL-1
SHEET NO.
54 OF 109
PROJECT 001650.0428

Peters Mountain Road

Roadcap Lane

2 Story
Frame
FFE 545.92

Frame
Shed

CO

Vent

Lid over
Greywater
Tank

Footprint
of Cesspool

Inv 541.42
4" PVC

Inv 541.49
4" PVC

Inv 541.95
4" PVC

Potential Drain Field

Potential Drain Field

±Drain Field

PID: 29-025-021
OWNER: MAX R BOWMAN

PID: 29-025-022
OWNER: ROBERT L BAKER

BT Co. of Pa 169
ATTCH 22714 540218

Guy Pole

MB

MH-61

MH-60

WW-3

20' Private Drive

TEMPORARY ROCK
CONSTRUCTION
ENTRANCE

12" COMPOST
FILTER SOCK

N.A.G. S-75 EROSION CONTROL
BLANKET (OR EQUAL) WITH
BIODEGRADABLE STAPLES

GRAPHIC SCALE
10' 5' 0' 10'
SCALE: 1"=10'

File name: P:\2001\001650.0428\CAD\Plan Sets\ESM\RDPS MORE Sh-ROADCAP.dwg Layout:ESC Mar 28, 2023-2:29pm abbott

NO.	REVISION	DATE	BY
1	CHANGE ORDER NO. 1	3/6/23	RSF

COMMONWEALTH OF PENNSYLVANIA
REGISTERED PROFESSIONAL
MATTHEW DAVID CICHY
ENGINEER
PE074220

HRG
Herbert, Rowland & Grubic, Inc.
Engineering & Related Services
AN EMPLOYEE-OWNED COMPANY

369 East Park Drive
Harrisburg, PA 17111
(717) 564-1121
Fax (717) 564-1158
hrg@hrg-inc.com
www.hrg-inc.com

HALIFAX AREA
WATER AND SEWER AUTHORITY
203 ARMSTRONG STREET
HALIFAX, PA 17032
(717) 896-8083

ROADCAP LANE PUMP STATION
EROSION AND SEDIMENTATION CONTROL SITE PLAN
FOR
HALIFAX TWP. SANITARY SEWER EXTENSION PROJECT

HALIFAX TOWNSHIP DAUPHIN COUNTY PENNSYLVANIA

PROJ. MGR. –	JJM
DESIGN–	MDC
CADD–	BAB
CHECKED–	
SCALE–	AS NOTED
DATE–	AUG. 2022

DRAWING NO.
RL-2
SHEET NO.
55 OF 109
PROJECT 001650.0428

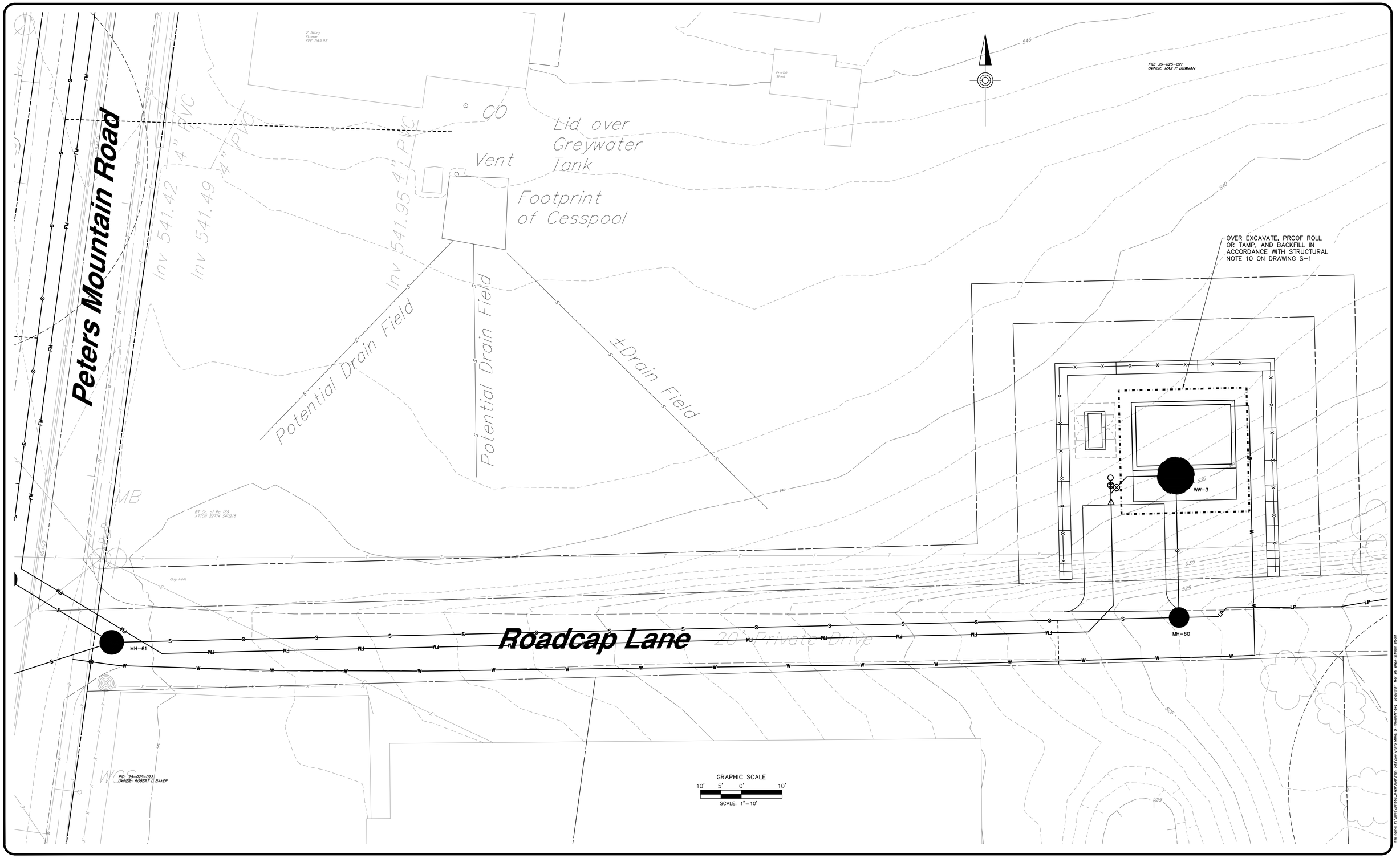

NO.	REVISION	DATE	BY
1	CHANGE ORDER NO. 1	3/6/23	RSF

COMMONWEALTH OF PENNSYLVANIA
REGISTERED PROFESSIONAL
MATTHEW DAVID CICHY
ENGINEER
PE074220

HRG
Herbert, Rowland & Grubic, Inc.
Engineering & Related Services
AN EMPLOYEE-OWNED COMPANY
369 East Park Drive
Harrisburg, PA 17111
(717) 564-1121
Fax (717) 564-1158
hrg@hrg-inc.com
www.hrg-inc.com

HALIFAX AREA
WATER AND SEWER AUTHORITY
203 ARMSTRONG STREET
HALIFAX, PA 17032
(717) 896-8083

ROADCAP LANE PUMP STATION
SITE PREPARATION PLAN
FOR
HALIFAX TWP. SANITARY SEWER EXTENSION PROJECT
HALIFAX TOWNSHIP DAUPHIN COUNTY PENNSYLVANIA

PROJ. MGR. – JJM
DESIGN– MDC
CADD– BAB
CHECKED–
SCALE– AS NOTED
DATE– AUG. 2022

DRAWING NO.
RL-3
SHEET NO.
56 OF 109
PROJECT 001650.0428

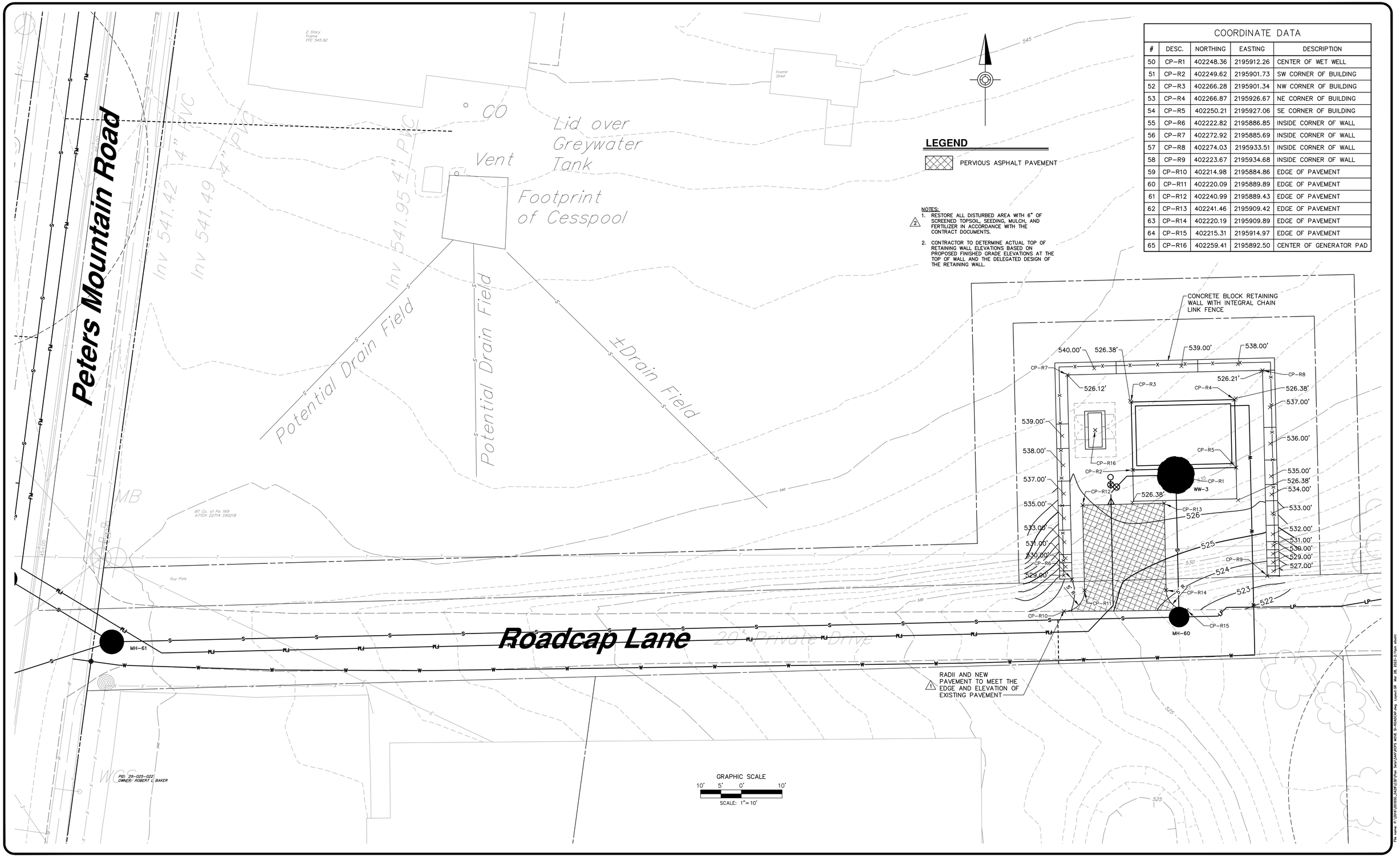

LEGEND

PERVIOUS ASPHALT PAVEMENT

NOTES:

1. RESTORE ALL DISTURBED AREA WITH 6" OF SCREENED TOPSOIL, SEEDING, MULCH, AND FERTILIZER IN ACCORDANCE WITH THE CONTRACT DOCUMENTS.
2. CONTRACTOR TO DETERMINE ACTUAL TOP OF RETAINING WALL ELEVATIONS BASED ON PROPOSED FINISHED GRADE ELEVATIONS AT THE TOP OF WALL AND THE DELEGATED DESIGN OF THE RETAINING WALL.

COORDINATE DATA

#	DESC.	NORTHING	EASTING	DESCRIPTION
50	CP-R1	402248.36	2195912.26	CENTER OF WET WELL
51	CP-R2	402249.62	2195901.73	SW CORNER OF BUILDING
52	CP-R3	402266.28	2195901.34	NW CORNER OF BUILDING
53	CP-R4	402266.87	2195926.67	NE CORNER OF BUILDING
54	CP-R5	402250.21	2195927.06	SE CORNER OF BUILDING
55	CP-R6	402222.82	2195886.85	INSIDE CORNER OF WALL
56	CP-R7	402272.92	2195885.69	INSIDE CORNER OF WALL
57	CP-R8	402274.03	2195933.51	INSIDE CORNER OF WALL
58	CP-R9	402223.67	2195934.68	INSIDE CORNER OF WALL
59	CP-R10	402214.98	2195884.86	EDGE OF PAVEMENT
60	CP-R11	402220.09	2195889.89	EDGE OF PAVEMENT
61	CP-R12	402240.99	2195889.43	EDGE OF PAVEMENT
62	CP-R13	402241.46	2195909.42	EDGE OF PAVEMENT
63	CP-R14	402220.19	2195909.89	EDGE OF PAVEMENT
64	CP-R15	402215.31	2195914.97	EDGE OF PAVEMENT
65	CP-R16	402259.41	2195892.50	CENTER OF GENERATOR PAD

NO.	REVISION	DATE	BY
3	CHANGE ORDER NO. 1	3/6/23	RSF
2	ADDENDUM NO. 2	10/5/22	RSF
1	ADDENDUM NO. 1	9/23/22	RSF

COMMONWEALTH OF PENNSYLVANIA
REGISTERED PROFESSIONAL
MATTHEW DAVID CICHY
ENGINEER
PE074220

HRG
Herbert, Rowland & Grubic, Inc.
Engineering & Related Services
AN EMPLOYEE-OWNED COMPANY
369 East Park Drive
Harrisburg, PA 17111
(717) 564-1121
Fax (717) 564-1158
hrg@hrg-inc.com
www.hrg-inc.com

HALIFAX AREA
WATER AND SEWER AUTHORITY
203 ARMSTRONG STREET
HALIFAX, PA 17032
(717) 896-8083

ROADCAP LANE PUMP STATION
SITE GRADING AND SURFACING PLAN
FOR
HALIFAX TWP. SANITARY SEWER EXTENSION PROJECT
HALIFAX TOWNSHIP DAUPHIN COUNTY PENNSYLVANIA

PROJ. MGR. – JJM
DESIGN– MDC
CADD– BAB
CHECKED–
SCALE– AS NOTED
DATE– AUG. 2022

DRAWING NO.
RL-4
SHEET NO.
57 OF 109
PROJECT 001650.0428

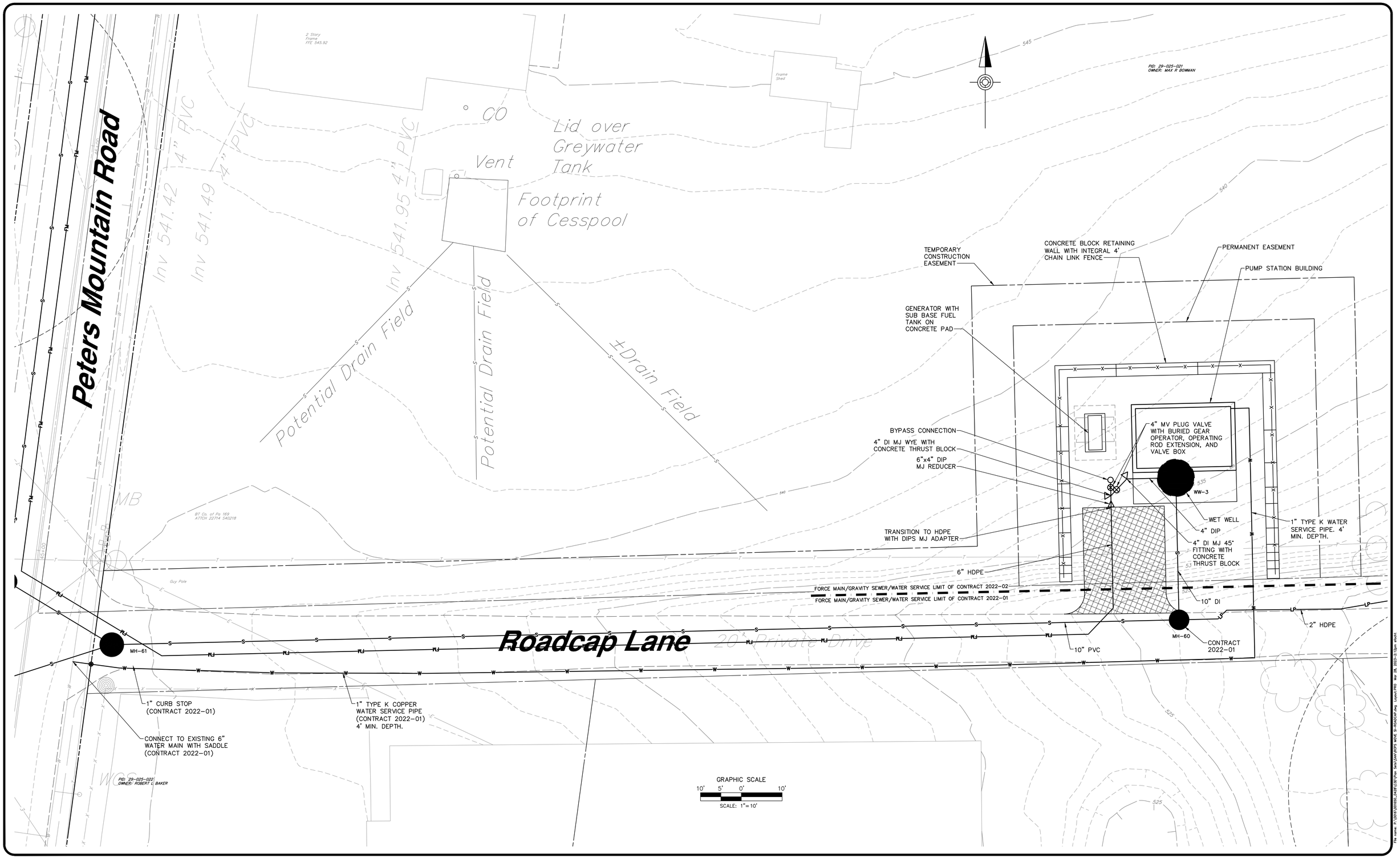

NO.	REVISION	DATE	BY
1	CHANGE ORDER NO. 1	3/6/23	RSF

COMMONWEALTH OF PENNSYLVANIA
REGISTERED PROFESSIONAL
MATTHEW DAVID CICHY
ENGINEER
PE074220

HRG
Herbert, Rowland & Grubic, Inc.
Engineering & Related Services
AN EMPLOYEE-OWNED COMPANY
369 East Park Drive
Harrisburg, PA 17111
(717) 564-1121
Fax (717) 564-1158
hrg@hrg-inc.com
www.hrg-inc.com

HALIFAX AREA
WATER AND SEWER AUTHORITY
203 ARMSTRONG STREET
HALIFAX, PA 17032
(717) 896-8083

ROADCAP LANE PUMP STATION
PROPOSED SITE PLAN
FOR
HALIFAX TWP. SANITARY SEWER EXTENSION PROJECT
HALIFAX TOWNSHIP DAUPHIN COUNTY PENNSYLVANIA

PROJ. MGR. – JJM	
DESIGN– MDC	
CADD– BAB	
CHECKED–MDC	
SCALE– AS NOTED	
DATE– AUG. 2022	

DRAWING NO.
RL-5
SHEET NO.
58 OF 109
PROJECT 001650.0428

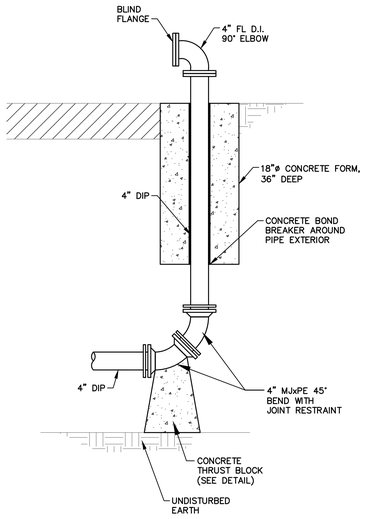

ELEVATION

BYPASS PUMPING CONNECTION TO FORCE MAIN

NOT TO SCALE

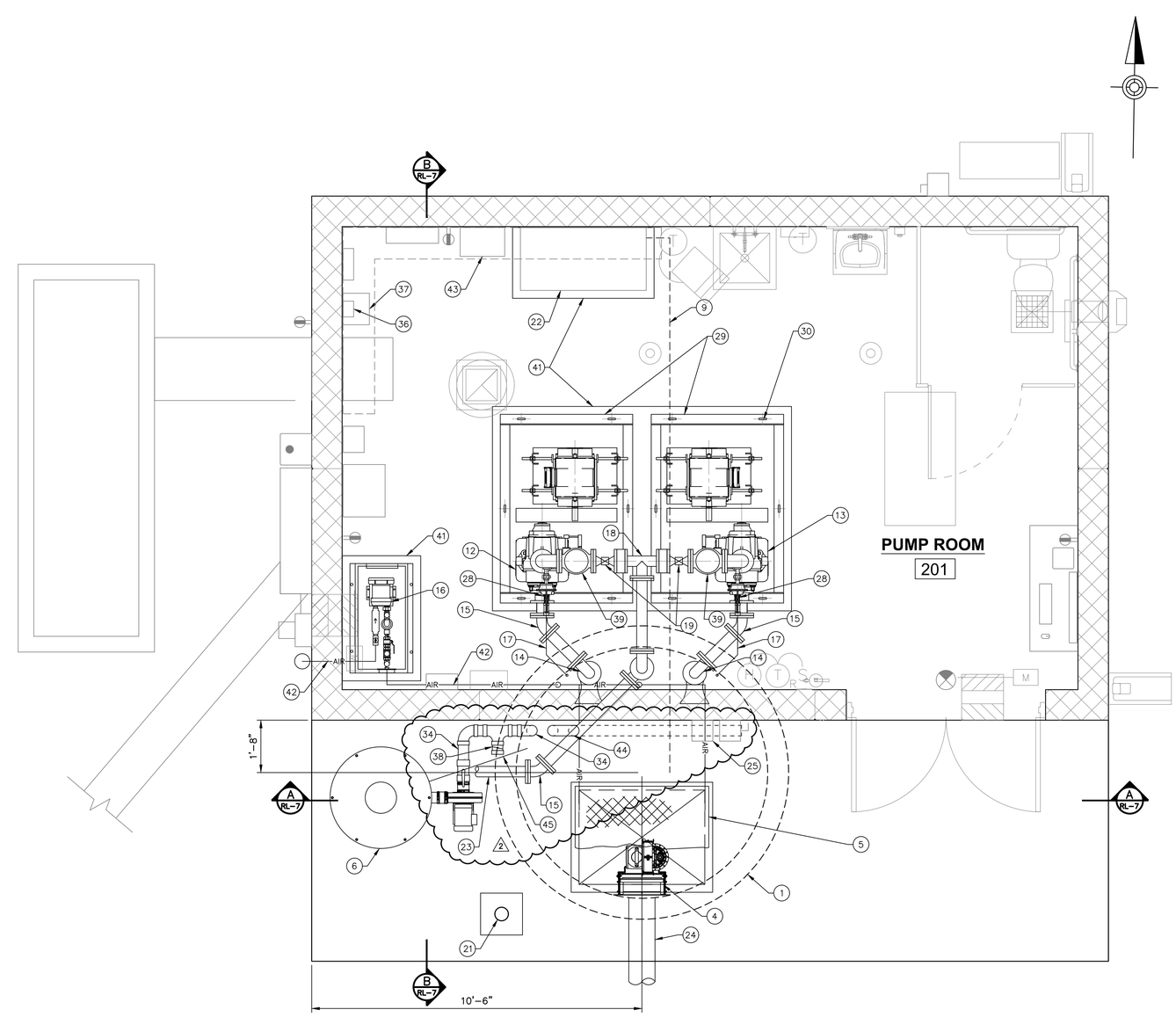

PUMP STATION PLAN

SCALE: 1/2" = 1'-0"

1' 0' 1' 2'

SCALE: 1/2"=1'-0"

NOTES:

1. ALL HARDWARE, BRACKETS, COMPONENTS, RAILS, SUPPORTS, AND ANCHORS IN WET WELL SHALL BE STAINLESS STEEL.
2. ALL PIPE PENETRATIONS SHALL BE PROVIDED WITH FLEXIBLE GASKETS OR LINK SEALS.
3. ALL PIPE AND FITTINGS IN THE WET WELL AND BUILDING SHALL BE EITHER FLANGED OR GROOVED CONNECTIONS, AS SELECTED BY THE CONTRACTOR.
4. STAINLESS STEEL PIPE AND FITTINGS ARE AN ACCEPTABLE ALTERNATIVE TO DUCTILE IRON PIPE AND FITTINGS.

KEY NOTES

1. 8'ø I.D. (MINIMUM) PRECAST CONCRETE WET WELL (H20 RATED WITH INTEGRAL BASE SLAB
2. CAST IN PLACE CONCRETE SLAB
3. CONCRETE FILLET, TO REMAIN BELOW PUMP OFF ELEVATION. SLOPE FLOOR TO PUMP INLETS.
4. SEWAGE GRINDER WITH CUSTOM WALL FRAME AND SLIDE RAIL SYSTEM PER MANUFACTURER'S RECOMMENDATIONS. INSTALL TOP OF CUTTER AT CENTERLINE OF INFLUENT SEWER.
5. 36"x48" SINGLE LEAF ALUMINUM ACCESS HATCH
6. ODOR CONTROL SYSTEM
7. MODULAR SEAL
8. 4" FLANGE AND FLARE 90° ELBOW
9. 1" S.S. 80 PVC BUBBLER LINE TO WET WELL (RUN BELOW CONCRETE SLAB)
10. S.S. PIPE SUPPORT
11. 3/8" SCH. 80 PVC BUBBLER LINE
12. PUMP NO. 1
13. PUMP NO. 2
14. 4" DI 90° ELBOW
15. 4" DI 45° ELBOW
16. WET WELL AERATION UNIT. INTAKE PIPE TO BE EXTENDED TO BUILDING EXTERIOR AND LOCATED A MIN. OF 36" ABOVE FINISHED GRADE.
17. 1 1/2" SS AIR RELEASE TO WET WELL
18. 4" DI TEE
19. 4" PLUG VALVE
20. 4" MAGNETIC FLOW METER (PROVIDE MIN. 12" SPOOL UPSTREAM AND 6" SPOOL DOWNSTREAM)
21. DAVIT CRANE PEDESTAL BASE
22. PUMP CONTROL PANEL
23. 4" DI PIPE
24. 10" DI INFLUENT GRAVITY SEWER PIPE
25. FLOAT JUNCTION BOX
26. BUBBLER AIR BELL
27. 4" DI SUCTION PIPE
28. AIR RELEASE VALVE AND BALL VALVE
29. PUMP SKID
30. 11/16" x 3" SLOT (TYP. 12)
31. ANCHOR BOLTS (TYP. 12)
32. FLOAT SWITCH
33. S.S. SLIDE RAILS
34. (2) 4"ø SCH 80 PVC VENT PIPE WITH S.S. PIPE SUPPORT. CONNECT TO ODOR CONTROL SYSTEM. SLOPE TO WET WELL. EXTEND PIPE TO INVERT IN ELEVATION.
35. 2" SCH 80 PVC AERATION PIPING
36. MAGNETIC FLOW METER TRANSMITTER
37. AUTODIALER
38. 4" SCH 80 PVC TEE AND BUTTERFLY VALVE
39. 4" CHECK VALVE
40. CAST-IN-PLACE CONCRETE ANTI-FLOATATION SLAB WITH REBAR ANCHORS INTO WET WELL.
41. HOUSEKEEPING PAD
42. 2" S.S. AERATION PIPING (TRANSITION TO SCH 80 PVC WITH THE WET WELL)
43. SEWAGE GRINDER CONTROL PANEL
44. (2) 4" DIA. SCH 80 PVC VENT INTAKE PIPE WITH INVERTED GOOSENECK AND S.S. BIRD SCREEN. EXTEND PIPE TO OPPOSITE CORNER OF WET WELL FROM VENT DISCHARGE PIPE AND PROVIDE S.S. PIPE SUPPORTS.
45. 1/2" DIA. SCH 80 PVC DRAIN PIPE. SLOPE TO AND DISCHARGE INTO WET WELL.

NO.	REVISION	DATE	BY
2	PROPOSAL REQUEST NO. 1	3/28/23	RSF
1	ADDENDUM NO. 4	10/14/22	RSF

COMMONWEALTH OF PENNSYLVANIA REGISTERED PROFESSIONAL MATTHEW DAVID CICHY ENGINEER PE074220

HRG Herbert, Rowland & Grubic, Inc. Engineering & Related Services AN EMPLOYEE-OWNED COMPANY
369 East Park Drive Harrisburg, PA 17111 (717) 564-1121 Fax (717) 564-1158 hrg@hrg-inc.com www.hrg-inc.com

HALIFAX AREA WATER AND SEWER AUTHORITY
203 ARMSTRONG STREET
HALIFAX, PA 17032
(717) 896-8083

ROADCAP LANE PUMP STATION
PLAN
FOR
HALIFAX TWP. SANITARY SEWER EXTENSION PROJECT
HALIFAX TOWNSHIP DAUPHIN COUNTY PENNSYLVANIA

PROJ. MGR. –	JJM
DESIGN–	MDC
CADD–	BAB
CHECKED–	MDC
SCALE–	AS NOTED
DATE–	AUG. 2022

DRAWING NO. **RL-6**
SHEET NO. 59 OF 109
PROJECT 001650.0428

File name: P:\2001\001650.0428\CAD\Plan Sets\SAN\001650428-PRO-RL6DGNF.dwg Layout: F-1 Mar 28, 2023-2:14pm abbott

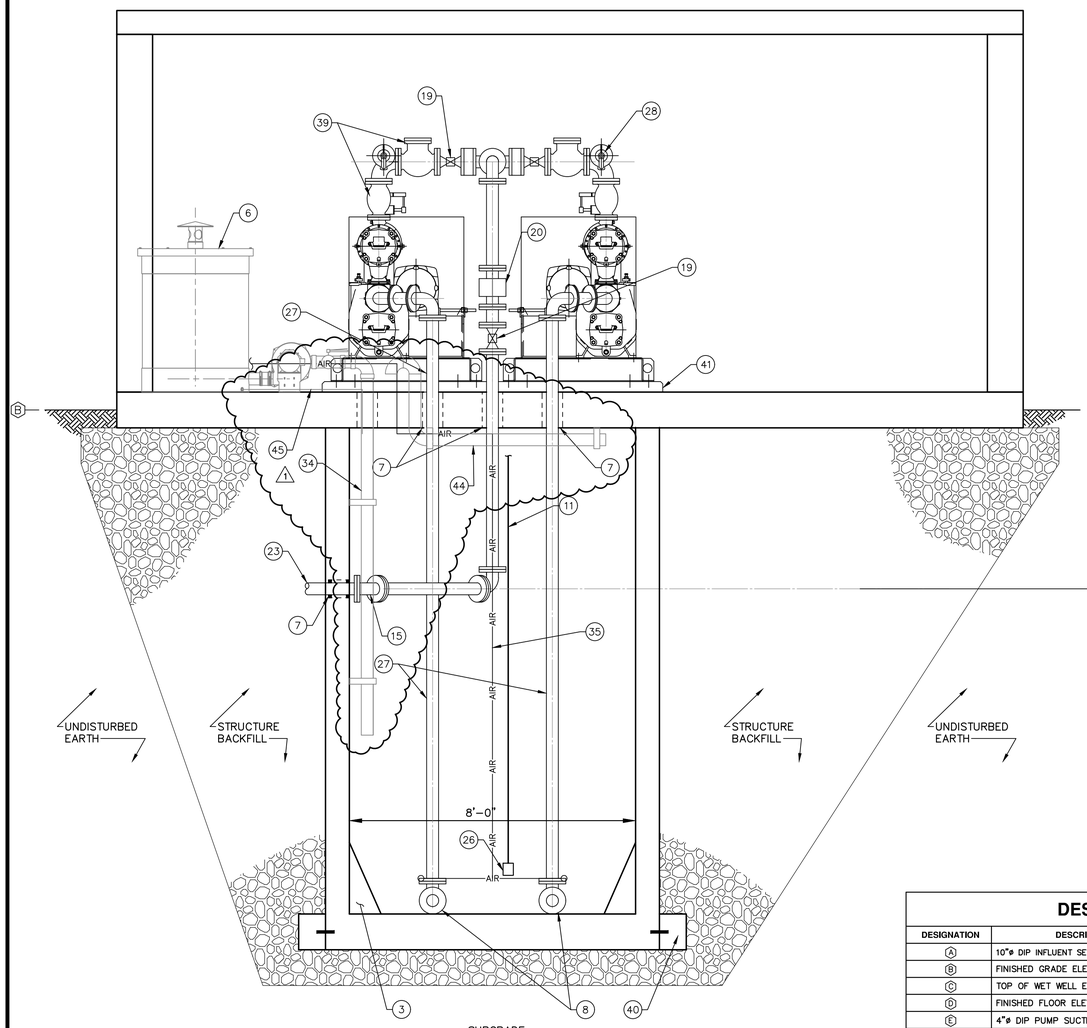

SECTION A-A

SCALE: 1/2" = 1'-0"

DESIGN SCHEDULE		
DESIGNATION	DESCRIPTION	ELEVATION (FT)
A	10"ø DIP INFLUENT SEWER INVERT ELEVATION	517.29
B	FINISHED GRADE ELEVATION – SOUTHEAST	526.38
C	TOP OF WET WELL ELEVATION	526.88
D	FINISHED FLOOR ELEVATION	526.88
E	4"ø DIP PUMP SUCTION CENTERLINE ELEVATION	529.49
F	4"ø DIP PUMP DISCHARGE CENTERLINE ELEVATION	533.32
G	4"ø DIP FORCE MAIN DISCHARGE CENTERLINE ELEVATION	521.38
H	HIGH WATER ALARM ON (FLOAT) ELEVATION	516.79
I	HIGH WATER ALARM – (BUBBER)/PUMP ON (FLOAT)	516.29
J	LAG PUMP ON (BUBBLER) ELEVATION	515.79
K	LEAD PUMP ON (BUBBLER) ELEVATION	515.29
L	BOTH PUMPS OFF (BUBBLER) ELEVATION	514.29
M	BOTH PUMPS OFF (FLOAT) ELEVATION	514.29
N	WET WELL BOTTOM ELEVATION	512.29
O	FINISHED GRADE ELEVATION – NORTHWEST	526.38

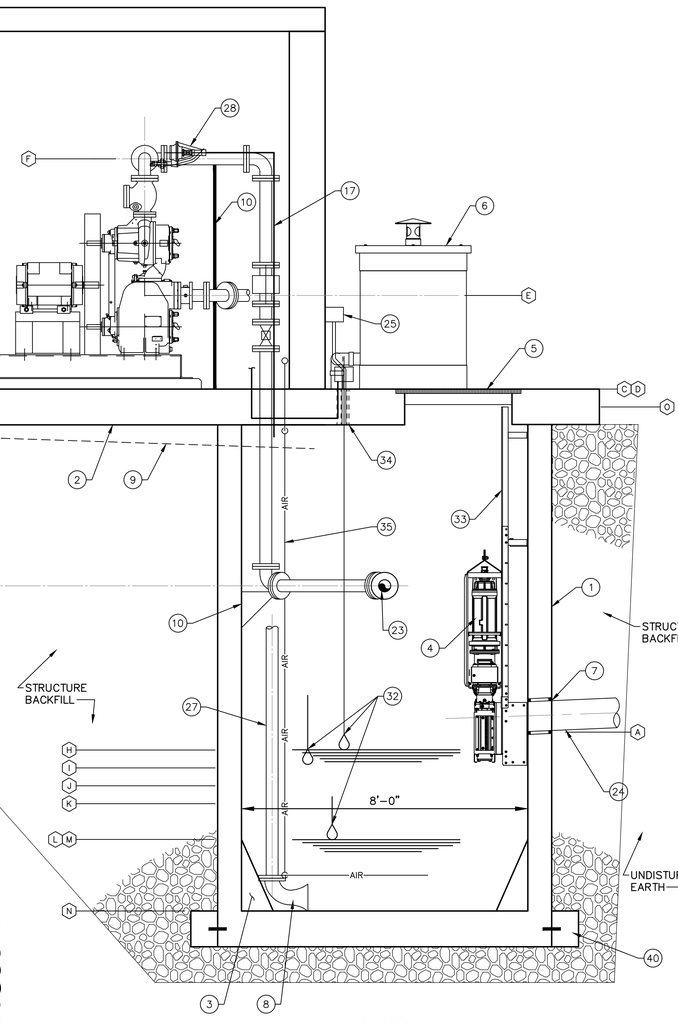

SECTION B-B

SCALE: 1/2" = 1'-0"

1' 0' 1' 2'

SCALE: 1/2"=1'-0"

KEY NOTES

1. 8'ø I.D. (MINIMUM) PRECAST CONCRETE WET WELL (H20 RATED WITH INTEGRAL BASE SLAB
2. CAST IN PLACE CONCRETE SLAB
3. CONCRETE FILLET, TO REMAIN BELOW PUMP OFF ELEVATION. SLOPE FLOOR TO PUMP INLETS.
4. SEWAGE GRINDER WITH CUSTOM WALL FRAME AND SLIDE RAIL SYSTEM PER MANUFACTURER'S RECOMMENDATIONS. INSTALL TOP OF CUTTER AT CENTERLINE OF INFLUENT SEWER.
5. 36"x48" SINGLE LEAF ALUMINUM ACCESS HATCH
6. ODOR CONTROL SYSTEM
7. MODULAR SEAL
8. 4" FLANGE AND FLARE 90° ELBOW
9. 1" S.S. 80 PVC BUBBLER LINE TO WET WELL (RUN BELOW CONCRETE SLAB)
10. S.S. PIPE SUPPORT
11. 3/8" SCH. 80 PVC BUBBLER LINE
12. PUMP NO. 1
13. PUMP NO. 2
14. 4" DI 90° ELBOW
15. 4" DI 45° ELBOW
16. WET WELL AERATION UNIT, INTAKE PIPE TO BE EXTENDED TO BUILDING EXTERIOR AND LOCATED A MIN. OF 36" ABOVE FINISHED GRADE.
17. 1 1/2" SS AIR RELEASE TO WET WELL
18. 4" DI TEE
19. 4" PLUG VALVE
20. 4" MAGNETIC FLOW METER (PROVIDE MIN. 12" SPOOL UPSTREAM AND 6" SPOOL DOWNSTREAM)
21. DAVIT CRANE PEDESTAL BASE
22. PUMP CONTROL PANEL
23. 4" DI PIPE
24. 10" DI INFLUENT GRAVITY SEWER PIPE
25. FLOAT JUNCTION BOX
26. BUBBLER AIR BELL
27. 4" DI SUCTION PIPE
28. AIR RELEASE VALVE AND BALL VALVE
29. PUMP SKID
30. 11/16" x 3" SLOT (TYP. 12)
31. ANCHOR BOLTS (TYP. 12)
32. FLOAT SWITCH
33. S.S. SLIDE RAILS
34. 4"ø SCH 80 PVC VENT PIPE WITH S.S. PIPE SUPPORT. CONNECT TO ODOR CONTROL SYSTEM. SLOPE TO WET WELL. EXTEND PIPE TO INVERT IN ELEVATION. (1)
35. 2" SCH 80 PVC AERATION PIPING
36. MAGNETIC FLOW METER TRANSMITTER
37. AUTODIALER
38. 4" SCH 80 PVC TEE AND BUTTERFLY VALVE
39. 4" CHECK VALVE
40. CAST-IN-PLACE CONCRETE ANTI-FLOATATION SLAB WITH REBAR ANCHORS INTO WET WELL.
41. HOUSEKEEPING PAD
42. 2" S.S. AERATION PIPING (TRANSITION TO SCH 80 PVC WITH THE WET WELL)
43. SEWAGE GRINDER CONTROL PANEL
44. 4" DIA. SCH 80 PVC VENT INTAKE PIPE WITH INVERTED GOOSENECK AND S.S. BIRD SCREEN. EXTEND PIPE TO OPPOSITE CORNER OF WET WELL FROM VENT DISCHARGE PIPE AND PROVIDE S.S. PIPE SUPPORTS. (1)
45. 1/2" DIA. SCH 80 PVC DRAIN PIPE. SLOPE TO AND DISCHARGE INTO WET WELL.

NO.	REVISION	DATE	BY
1	PROPOSAL REQUEST NO. 1	3/28/23	RSF

COMMONWEALTH OF PENNSYLVANIA
REGISTERED PROFESSIONAL
MATTHEW DAVID CICHY
ENGINEER
PE074220

HRG
Herbert, Rowland & Grubic, Inc.
Engineering & Related Services
AN EMPLOYEE-OWNED COMPANY
369 East Park Drive
Harrisburg, PA 17111
(717) 564-1121
Fax (717) 564-1158
hrg@hrg-inc.com
www.hrg-inc.com

HALIFAX AREA
WATER AND SEWER AUTHORITY
203 ARMSTRONG STREET
HALIFAX, PA 17032
(717) 896-8083

ROADCAP LANE PUMP STATION
SECTIONS
FOR
HALIFAX TWP. SANITARY SEWER EXTENSION PROJECT
HALIFAX TOWNSHIP DAUPHIN COUNTY PENNSYLVANIA

PROJ. MGR. –	JJM
DESIGN–	MDC
CADD–	BAB
CHECKED–	MDC
SCALE–	AS NOTED
DATE–	AUG. 2022

DRAWING NO.
RL-7
SHEET NO.
60 OF 109
PROJECT 001650.0428

File name: P:\001\001650-2428\CAD\Plan Sets\SAN\001650428-PRO-ROADCAP.dwg Layout:P-2 Mar 28, 2023-2:19pm abbott

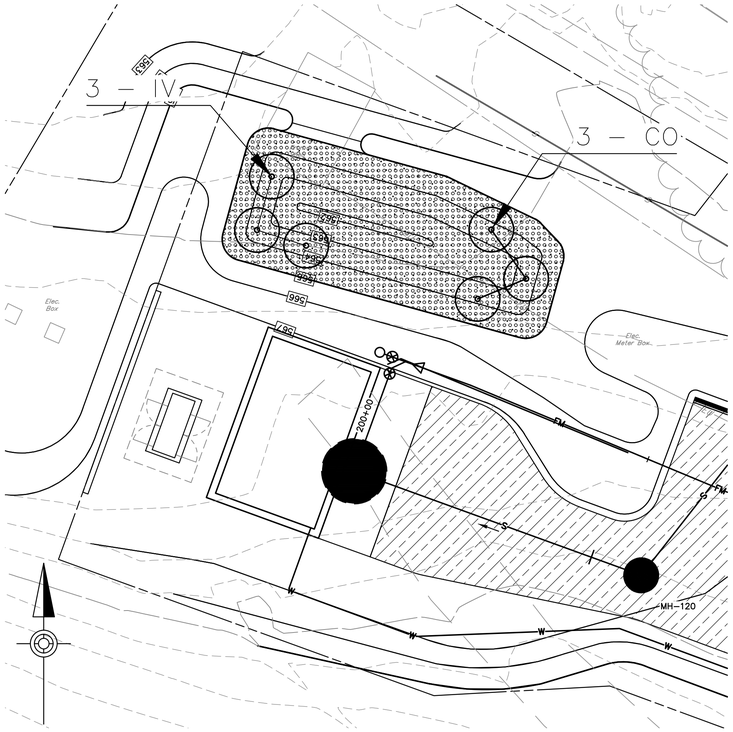

LENKER PUMP STATION PLAN

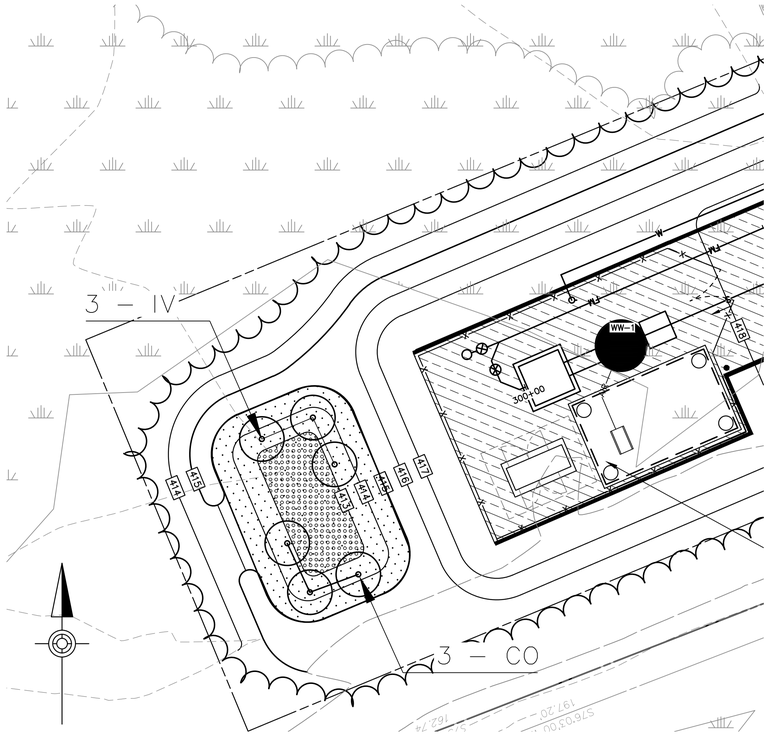

CREEK ROAD PUMP STATION PLAN

SEED MIX

ERNMX-180-2 – SOUTHEAST RAIN GARDEN MIX
SEEDING RATE: 20 LB PER ACRE

24.0% Schizachyrium scoparium, 'Blaze' (Little Bluestem, 'Blaze')
23.4% Panicum anceps, Eastern Shore MD Ecotype (Beaked Panicgrass, Eastern Shore MD Ecotype)
15.0% Elymus virginicus, AR Ecotype (Virginia Wildrye, AR Ecotype)
10.0% Panicum rigidulum, Coastal Plain NC Ecotype (Redtop Panicgrass, Coastal Plain NC Ecotype)
3.0% Chamaecrista fasciculata, FL Ecotype (Partridge Pea, FL Ecotype)
3.0% Rudbeckia hirta, Coastal Plain NC Ecotype (Blackeyed Susan, Coastal Plain NC Ecotype)
2.0% Helianthus angustifolius, Coastal Plain NC Ecotype (Narrowleaf Sunflower, Coastal Plain NC Ecotype)
2.0% Hibiscus moscheutos, Coastal Plain NC Ecotype (Crimsoneyed Rosemallow, Coastal Plain NC Ecotype)
1.5% Coreopsis grandiflora, Piedmont GA Ecotype (Largeflower Tickseed, Piedmont GA Ecotype)
1.5% Coreopsis lanceolata (Lanceleaf Coreopsis)
1.0% Carex albolutescens, Coastal Plain NC Ecotype (Greenwhite Sedge, Coastal Plain NC Ecotype)
1.0% Juncus effusus, Coastal Plain NC Ecotype (Soft Rush, Coastal Plain NC Ecotype)
1.0% Juncus tenuis, NC Ecotype (Path Rush, NC Ecotype)
1.0% Lespedeza virginica, VA Ecotype (Slender Lespedeza, VA Ecotype)
1.0% Rhynchospora globularis, NC Ecotype (Globe Beaksedge, NC Ecotype)
1.0% Vernonia angustifolia, SC Ecotype (Tall Ironweed, SC Ecotype)
0.9% Aster spectabilis, NC Ecotype (Showy Aster, NC Ecotype)
0.8% Eryngium yuccifolium, SC Ecotype (Rattlesnake Master, SC Ecotype)
0.8% Eupatorium coelestinum, VA Ecotype (Mistflower, VA Ecotype)
0.7% Monarda punctata, FL Ecotype (Spotted Beebalm, FL Ecotype)
0.4% Baptisia albescens, NC Ecotype (Spiked Wild Indigo, NC Ecotype)

PLANTING PLAN LEGEND

⊙ PROPOSED SHRUB PLANTING
ERNMX – 180-2 – SOUTHEAST RAIN GARDEN MIX

CONSTRUCTION NOTES

1. RAIN GARDEN AREA SHOULD BE EXCAVATED TO 20" BELOW FINISHED GRADE.
2. 18" OF AMENDED SOIL CONTAINING 30% SAND, 40% TOPSOIL AND 30% COMPOST/ORGANIC MATTER SHOULD BE INSTALLED IN THE EXCAVATION.
3. SHRUB SPECIES INSTALLED PER THE PLANTING PLAN AND SCHEDULES.
4. SEED MIX APPLIED AS SHOWN WITH A MULCH LAYER NO MORE THAN 2" THICK AFTER SEEDING.
5. WATER THE ENTIRE AREA UNTIL SOILS ARE SATURATED.

SHRUB PLANTING SCHEDULE

QTY.	ID	BOTANICAL NAME	COMMON NAME	PLANTING INTERVAL	PLANTING SIZE/CONDITIONS
6	CO	*CEPHALANTHUS OCCIDENTALIS*	BUTTONBUSH	6 FT. O.C.	24"–36" HEIGHT
6	IV	ILEX VERTICILLATA	WINTERBERRY	6 FT. OC.	24"–36" HEIGHT

NO.	REVISION	DATE	BY

COMMONWEALTH OF PENNSYLVANIA
REGISTERED PROFESSIONAL
MATTHEW J. VANASKIE
ENGINEER
PE077051

HRG
Herbert, Rowland & Grubic, Inc.
Engineering & Related Services
AN EMPLOYEE-OWNED COMPANY
369 East Park Drive
Harrisburg, PA 17111
(717) 564-1121
Fax (717) 564-1158
hrg@hrg-inc.com
www.hrg-inc.com

HALIFAX AREA
WATER AND SEWER AUTHORITY
203 ARMSTRONG STREET
HALIFAX, PA 17032
(717) 896-8083

LANDSCAPING PLAN
FOR
HALIFAX TWP. SANITARY SEWER EXTENSION PROJECT
HALIFAX TOWNSHIP DAUPHIN COUNTY PENNSYLVANIA

PROJ. MGR. – JJM
DESIGN– MJW
CADD– MJW
CHECKED–MJV
SCALE– AS NOTED
DATE– AUG. 2022

DRAWING NO.
LS-1
SHEET NO.
61 OF 109
PROJECT 001650.0428

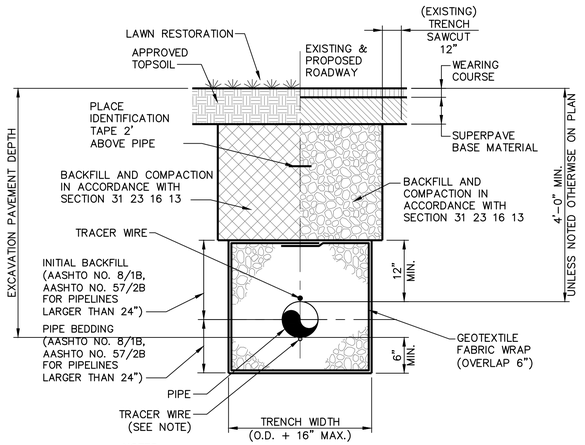

NOTES:
1. GEOTEXTILE FABRIC WRAP SHALL BE FURNISHED AND INSTALLED WITH DIRECTED IN THE FIELD BY OWNER OR ENGINEER.
2. PROVIDE TRACER WIRE FOR NON-METALLIC PRESSURIZED MAINS. TRACER WIRE SHALL BE LOOSELY AFFIXED TO MAIN UTILIZING ZIP TIES (OR SIMILAR METHODS, INCLUDING TRENCHLESS RESTORATIONS)

PIPE TRENCH DETAIL
NOT TO SCALE

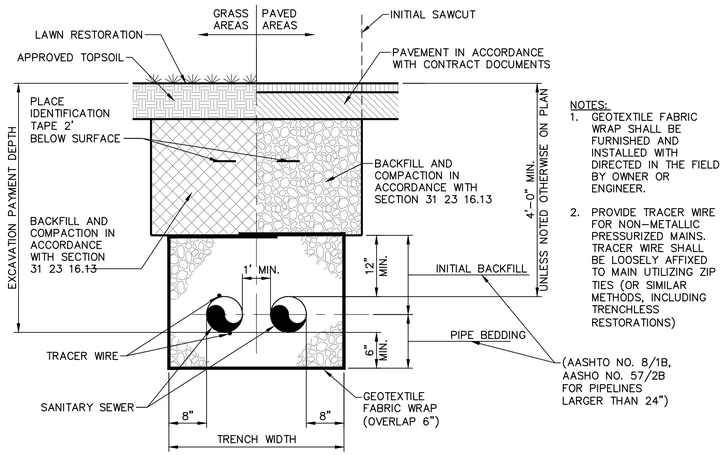

NOTES:
1. GEOTEXTILE FABRIC WRAP SHALL BE FURNISHED AND INSTALLED WITH DIRECTED IN THE FIELD BY OWNER OR ENGINEER.
2. PROVIDE TRACER WIRE FOR NON-METALLIC PRESSURIZED MAINS. TRACER WIRE SHALL BE LOOSELY AFFIXED TO MAIN UTILIZING ZIP TIES (OR SIMILAR METHODS, INCLUDING TRENCHLESS RESTORATIONS)

DUAL PIPE TRENCH DETAIL
NOT TO SCALE

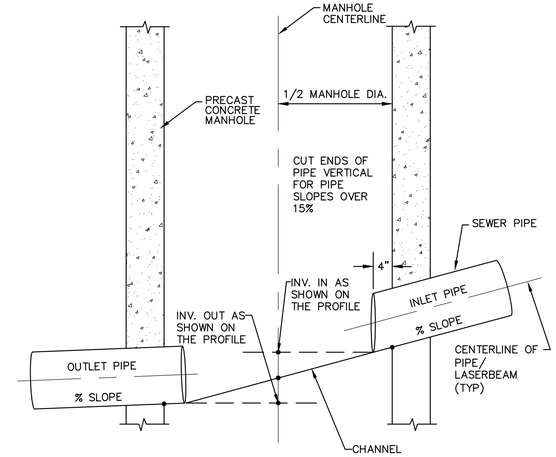

NOTES:
1. INLET & OUTLET INVERT ELEVATIONS ARE TO THE CENTER OF THE MANHOLE.
2. PROFILE DISTANCE AND SLOPE ARE FROM CENTERLINE OF MANHOLE TO CENTERLINE OF MANHOLE. SLOPE TO BE ADJUSTED AS REQUIRED IN FIELD TO MAINTAIN CENTERLINE INVERT IN AND OUT.
3. FOR EXISTING MANHOLES, WHEN EX INV IS NOT SPECIFIED AS OUT OR IN, ELEVATION IS AT CENTER OF MANHOLE.

MANHOLE INVERT DETAIL
NOT TO SCALE

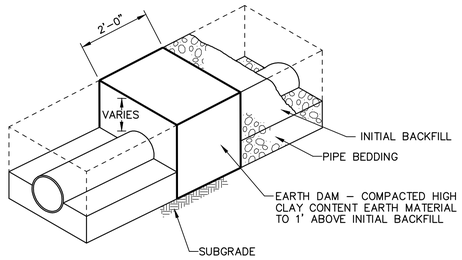

CLAY DIKE DETAIL
NOT TO SCALE

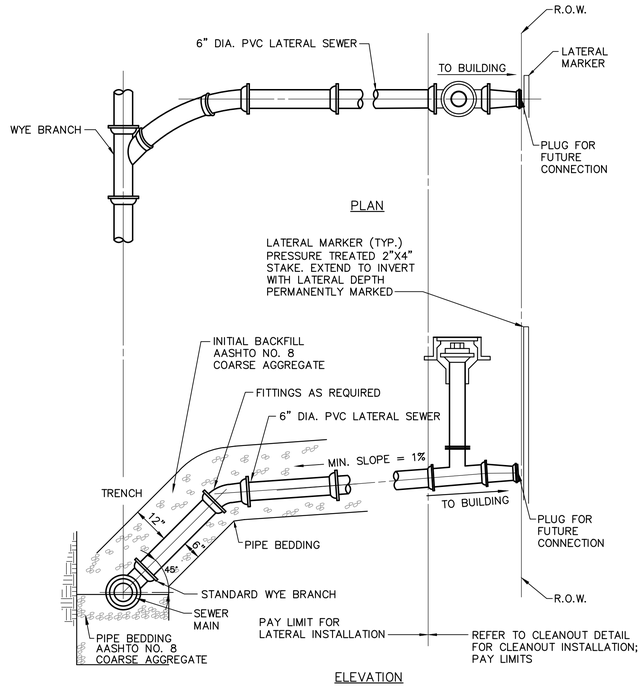

NOTES:
1. METHOD OF LATERAL INSTALLATION (STANDARD OR SLOPED RISER) TO BE DETERMINED IN THE FIELD BASED ON DEPTH NEEDED FOR SERVICE CONNECTION.
2. INSERT A TEE SHALL BE USED IN LIEU OF WYE WHEN CONNECTING TO EXISTING SEWER MAIN.

SLOPED RISER LATERAL DETAIL
NOT TO SCALE

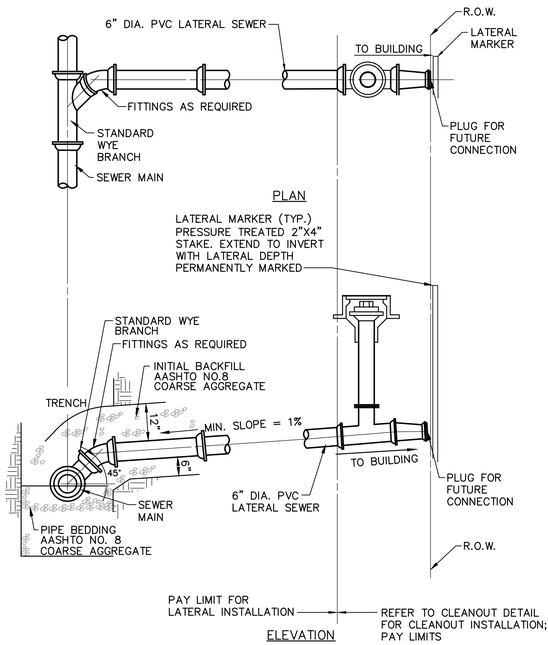

NOTES:
1. METHOD OF LATERAL INSTALLATION (STANDARD OR SLOPED RISER) TO BE DETERMINED IN THE FIELD BASED ON DEPTH NEEDED FOR SERVICE CONNECTION.
2. INSERT A TEE SHALL BE USED IN LIEU OF WYE WHEN CONNECTING TO EXISTING SEWER MAIN.

STANDARD LATERAL DETAIL
NOT TO SCALE

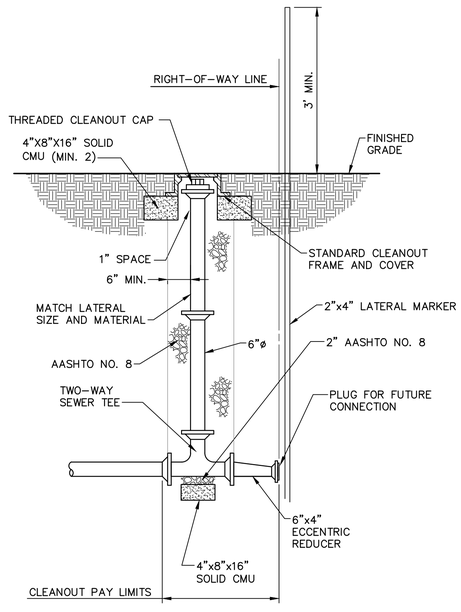

NOTES:
1. PERMANENTLY NOTE DEPTH OF LATERAL ON THE LATERAL MARKER.

CO CLEANOUT DETAIL
NOT TO SCALE

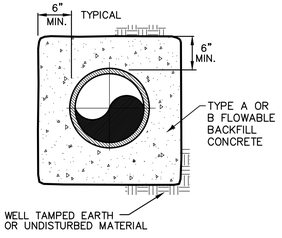

SECTION

CONCRETE ENCASEMENT DETAIL
NOT TO SCALE

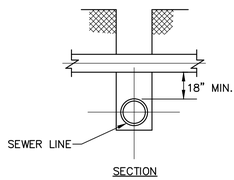

SECTION

NOTES:
1. IF JOINT ON WATER MAIN IS WITHIN LIMITS OF SANITARY SEWER TRENCH INSTALL MECHANICAL BELL JOINT CLAMP.
2. IF CLEARANCE IS LESS THAN 18", CONCRETE ENCASE SANITARY SEWER PIPE 10 FT. EACH SIDE OF WATER MAIN. TO BE PAID AT UNIT PRICE BID PER CUBIC YARD OF CONCRETE.
3. IN NO CASE SHALL THE SANITARY SEWER PIPE CONTACT ANY WATER MAIN, SERVICE LINE OR APPURTENANCE.

VERTICAL WATER MAIN CLEARANCE
NOT TO SCALE

NO.	REVISION	DATE	BY

COMMONWEALTH OF PENNSYLVANIA — REGISTERED PROFESSIONAL — MATTHEW DAVID CICHY — ENGINEER PE074220

HRG
Herbert, Rowland & Grubic, Inc.
Engineering & Related Services
AN EMPLOYEE-OWNED COMPANY
369 East Park Drive
Harrisburg, PA 17111
(717) 564-1121
Fax (717) 564-1158
hrg@hrg-inc.com
www.hrg-inc.com

HALIFAX AREA WATER AND SEWER AUTHORITY
203 ARMSTRONG STREET
HALIFAX, PA 17032
(717) 896-8083

MISCELLANEOUS CONSTRUCTION DETAILS
FOR
HALIFAX TWP. SANITARY SEWER EXTENSION PROJECT
HALIFAX TOWNSHIP — DAUPHIN COUNTY — PENNSYLVANIA

PROJ. MGR.	– JJM
DESIGN–	MDC
CADD–	BAB
CHECKED–	MDC
SCALE–	AS NOTED
DATE–	AUG. 2022

DRAWING NO. **DT-1**
SHEET NO. 62 OF 109
PROJECT 001650.0428

File name: P:\001650\001650-0428\CAD\Plan Set\LAYOUT\001650428-ST.dwg Layout:1 Sep 02, 2022 - 11:47am elliott

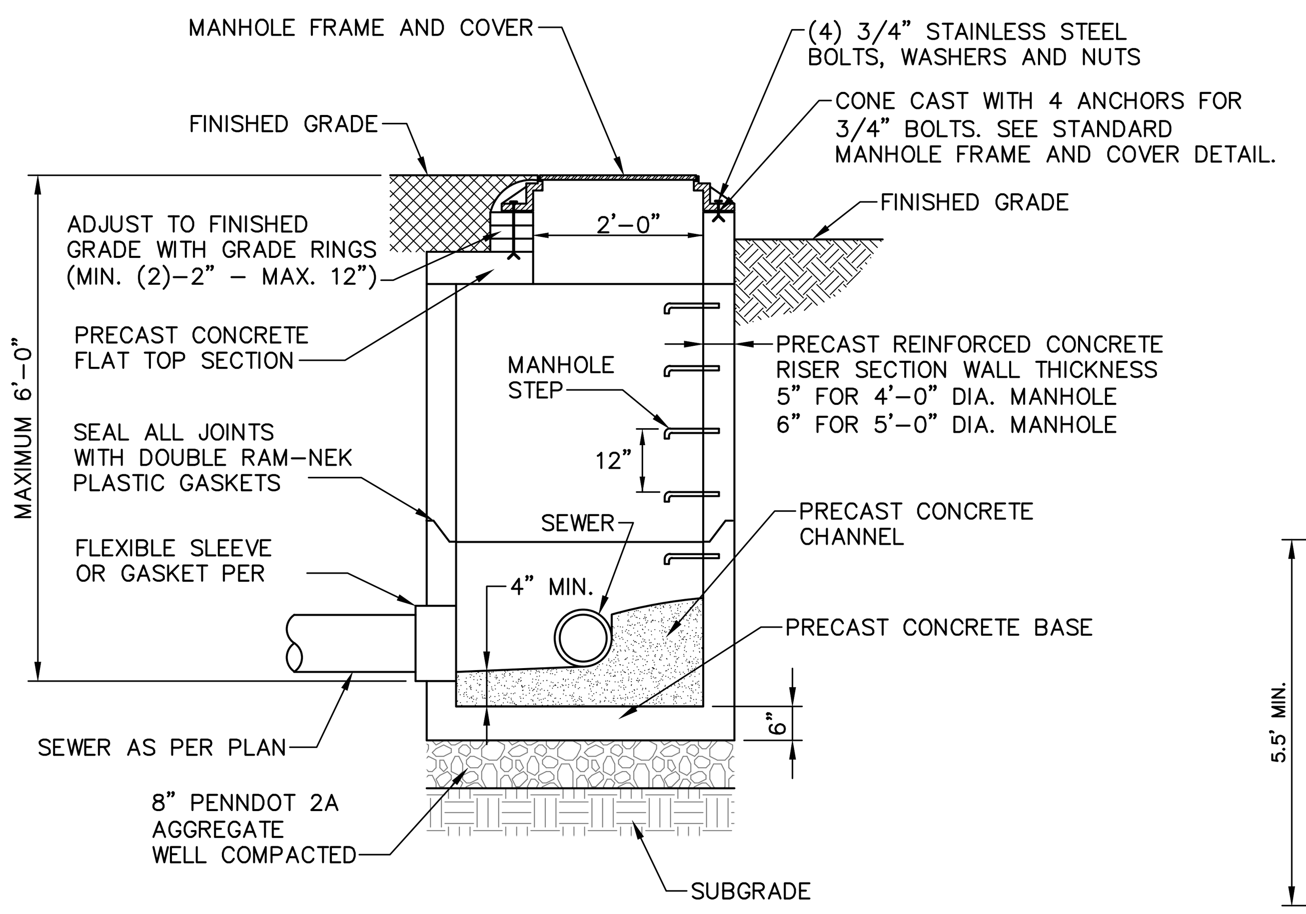

NOTES:
1. THE ENTIRE OUTER SURFACE OF THE MANHOLE SHALL BE COATED WITH 2 COATS COAL TAR EPOXY.
2. INSTALL MANHOLE FRAME AND COVER 1/8" BELOW FINAL PAVEMENT GRADE.
3. 100% COMPACTION OF MANHOLE BACKFILL REQUIRED.
4. FLOW CHANNEL BENCH HEIGHT TO MATCH CROWN OF PIPE.
5. MANHOLE ENCAPSULATION SYSTEM SHALL BE INSTALLED WHEN REQUIRED BY ENGINEER. SYSTEM SHALL NOT BE EXTENEDED ABOVE FINISHED GRADE.
6. USE TAPERED GRADE RING AS TOP RING TO MATCH CONTOUR OF PAVEMENT.

SHALLOW SANITARY SEWER MANHOLE DETAIL

NOT TO SCALE

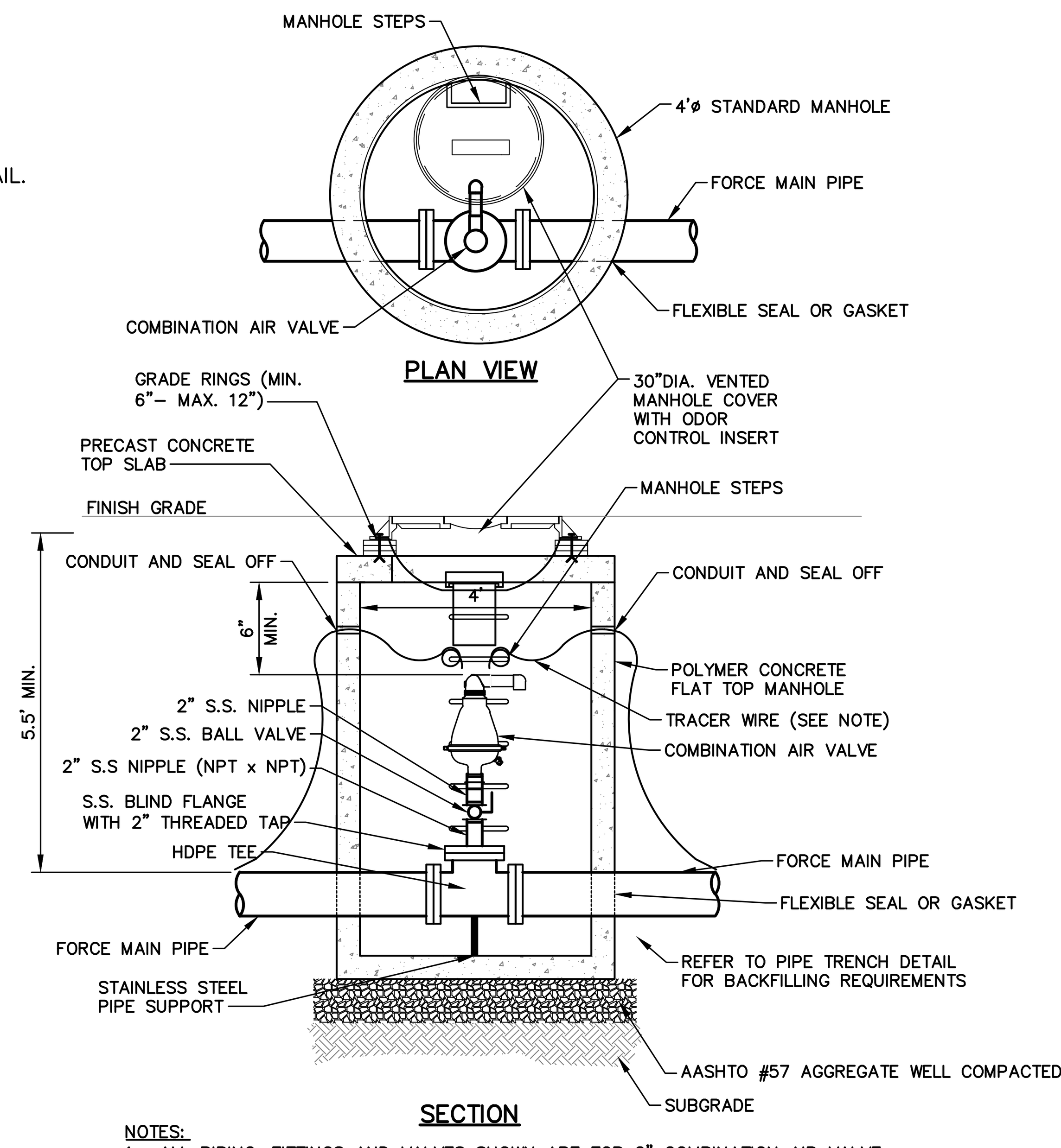

NOTES:
1. ALL PIPING, FITTINGS AND VALVES SHOWN ARE FOR 2" COMBINATION AIR VALVE INSTALLATION.
2. CONTRACTOR TO COORDINATE THE DEPTH OF THE FORCE MAIN AT THE AIR RELEASE VALVE MANHOLE TO ENSURE CLEARANCES ARE MET AND THE LOCATION IS AT THE HIGH POINT.
3. CONTRACTOR TO PROVIDE CLAMPS/BRACES AS NECESSARY TO SUPPORT CAV ASSEMBLY. ATTACH CLAMPS/BRACES TO MANHOLE AS NECESSARY.
4. INSTALL 1" DIAMETER DRAIN HOLE IN THE MANHOLE BASE. IN AREAS OF HIGH GROUNDWATER, PLUG DRAIN HOLE WHEN DIRECTED BY THE ENGINEER.
5. TRACER WIRE SHALL BE LOOSELY AFFIXED TO SEWER MAIN UTILIZING ZIP TIES (OR SIMILAR METHODS) AND BROUGHT TO THE SURFACE AT THE MANHOLE. CONTRACTOR TO PROVIDE A MINIMUM 36" LENGTH CONTINUOUS LOOP AT EACH TERMINAL END TO FACILITATE LOCATOR CONNECTIONS. INSTALL SEAL NUT ON END OF TRACER WIRE.
6. INSTALL MANHOLE FRAME AND COVER 1/8" BELOW FINAL PAVEMENT GRADE.

AIR RELEASE VALVE MANHOLE FORCE MAIN

NOT TO SCALE

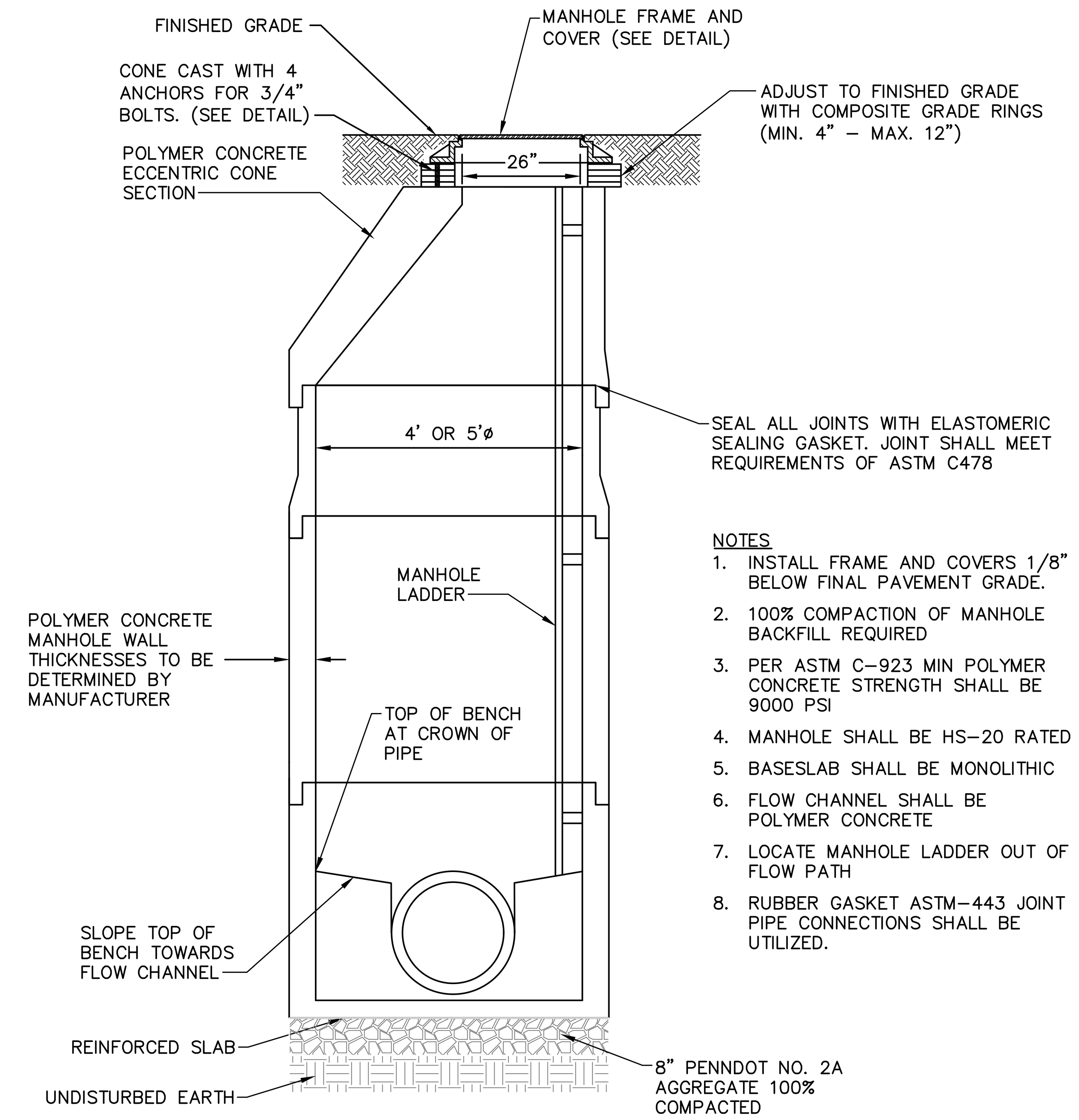

NOTES
1. INSTALL FRAME AND COVERS 1/8" BELOW FINAL PAVEMENT GRADE.
2. 100% COMPACTION OF MANHOLE BACKFILL REQUIRED
3. PER ASTM C–923 MIN POLYMER CONCRETE STRENGTH SHALL BE 9000 PSI
4. MANHOLE SHALL BE HS–20 RATED
5. BASESLAB SHALL BE MONOLITHIC
6. FLOW CHANNEL SHALL BE POLYMER CONCRETE
7. LOCATE MANHOLE LADDER OUT OF FLOW PATH
8. RUBBER GASKET ASTM–443 JOINT PIPE CONNECTIONS SHALL BE UTILIZED.

POLYMER CONCRETE MANHOLE DETAIL

NOT TO SCALE

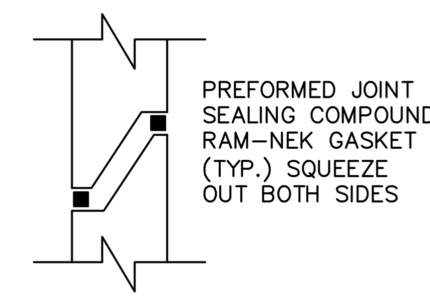

JOINT DETAIL

NOT TO SCALE

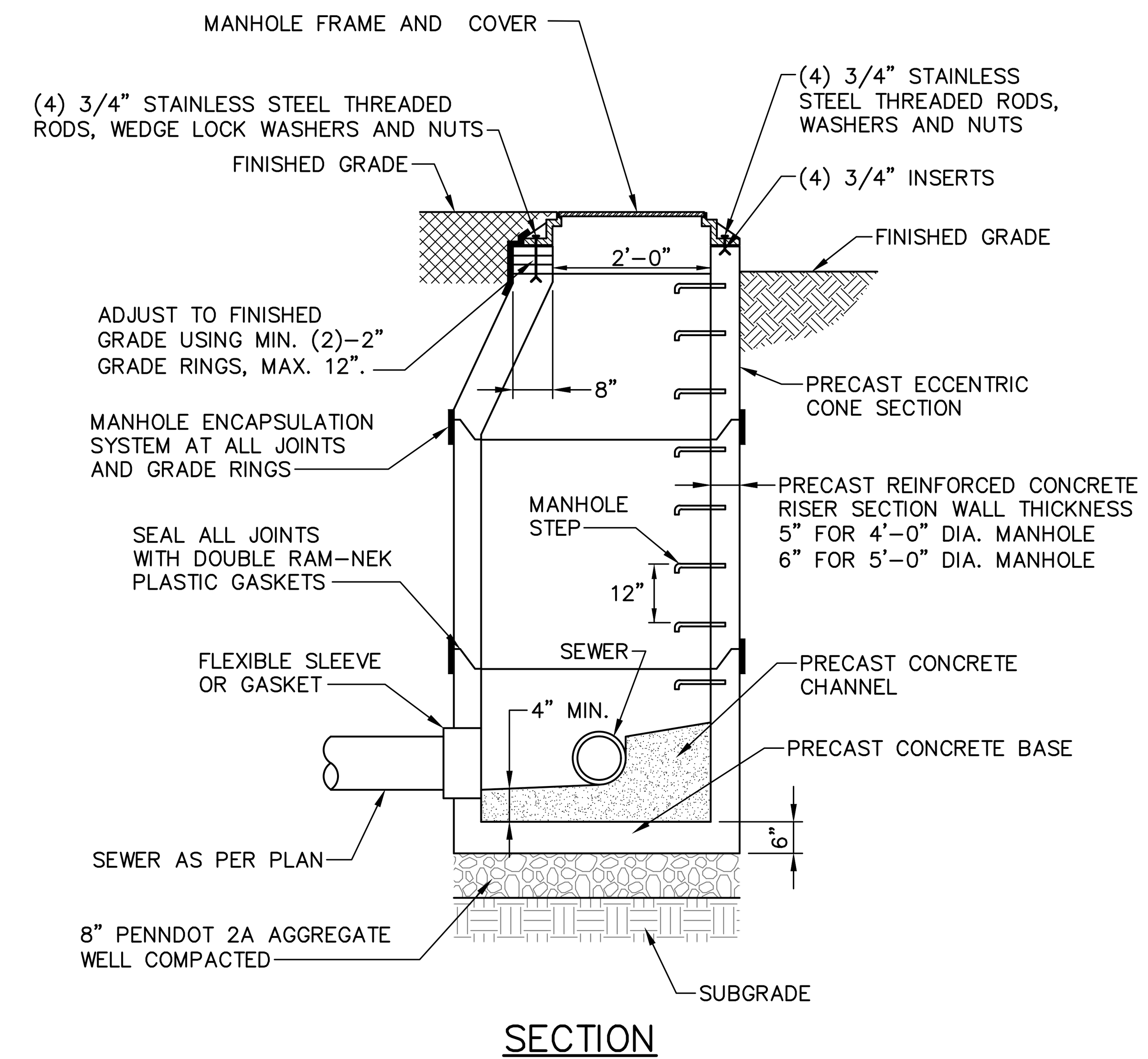

SECTION

NOTES:
1. INSTALL MANHOLE FRAME AND COVER ⅛" BELOW FINAL PAVEMENT GRADE.
2. THE ENTIRE OUTER SURFACE OF THE MANHOLE SHALL BE COATED WITH 2 COATS BITUMASTIC.
3. 100% COMPACTION OF MANHOLE BACKFILL REQUIRED.
4. FLOW CHANNEL BENCH HEIGHT TO MATCH CROWN OF PIPE.
5. MANHOLE ENCAPSULATION SYSTEM SHALL BE INSTALLED WHEN REQUIRED BY ENGINEER. SYSTEM SHALL NOT BE EXTENEDED ABOVE FINISHED GRADE.
6. USE TAPERED GRADE RING AS TOP RING TO MATCH CONTOUR OF PAVEMENT.

STANDARD SEWER MANHOLE DETAIL

NOT TO SCALE

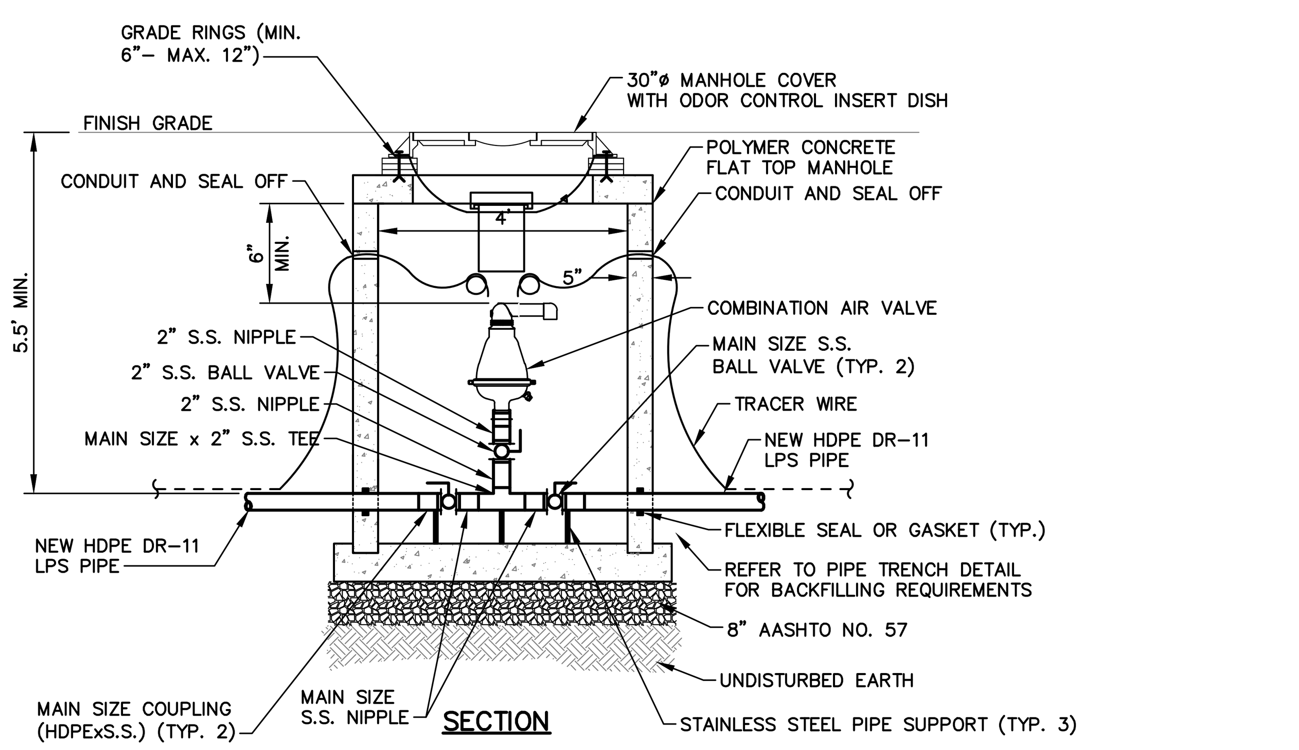

NOTES:
1. ALL PIPING, FITTINGS AND VALVES SHOWN ARE FOR 2" COMBINATION AIR VALVE INSTALLATION.
2. CONTRACTOR TO COORDINATE THE DEPTH OF THE LOW PRESSURE SEWERS AT THE AIR RELEASE VALVE MANHOLE TO ENSURE CLEARANCES ARE MET AND THE LOCATION IS AT THE HIGH POINT.
3. CONTRACTOR TO PROVIDE S.S. CLAMPS/BRACES AS NECESSARY TO SUPPORT CAV ASSEMBLY. ATTACH CLAMPS/BRACES TO MANHOLE AS NECESSARY.
4. INSTALL 1" DIAMETER DRAIN HOLE IN THE MANHOLE BASE. IN AREAS OF HIGH GROUNDWATER, PLUG DRAIN HOLE WHEN DIRECTED BY THE ENGINEER.
5. TRACER WIRE SHALL BE LOOSELY AFFIXED TO SEWER MAIN UTILIZING ZIP TIES (OR SIMILAR METHODS) AND BROUGHT TO THE SURFACE AT THE MANHOLE. CONTRACTOR TO PROVIDE A MINIMUM 36" LENGTH CONTINUOUS LOOP AT EACH TERMINAL END TO FACILITATE LOCATOR CONNECTIONS. INSTALL SEAL NUT ON END OF TRACER WIRE.
6. CONTRACTOR HAS THE OPTION OF USING GROOVED S.S. FITTINGS AND VALVES.
7. INSTALL MANHOLE FRAME AND COVER 1/8" BELOW FINAL PAVEMENT GRADE.
8. MANHOLE SHALL INCLUDE STEPS OR LADDER.

AIR RELEASE VALVE MANHOLE - LOW PRESSURE

NOT TO SCALE

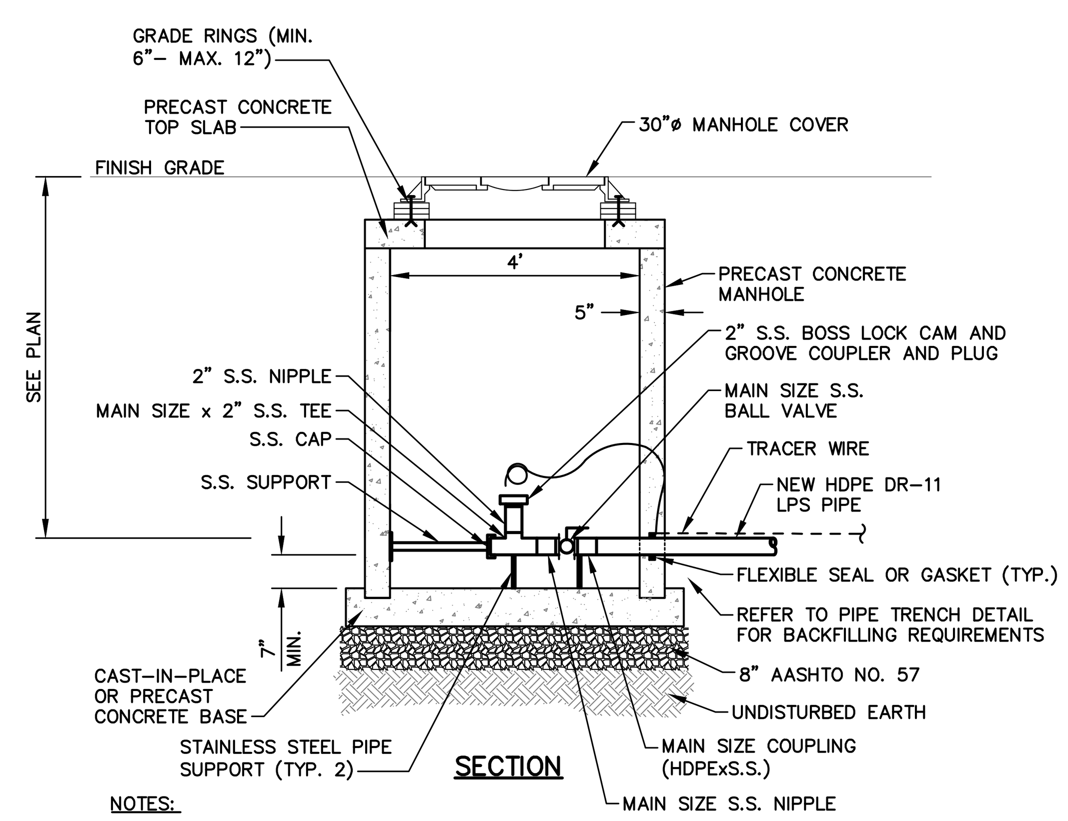

NOTES:
1. SEE PENNDOT PUBLICATIONS 72M, RC–39M FOR ADDITIONAL DETAILS.
2. TRACER WIRE SHALL BE LOOSELY AFFIXED TO SEWER MAIN UTILIZING ZIP TIES (OR SIMILAR METHODS) AND BROUGHT TO THE SURFACE AT THE MANHOLE. CONTRACTOR TO PROVIDE A MINIMUM 36" LENGTH CONTINUOUS LOOP AT EACH TERMINAL END TO FACILITATE LOCATOR CONNECTIONS. INSTALL SEAL NUT ON END OF TRACER WIRE.
3. CONTRACTOR HAS THE OPTION OF USING GROOVED S.S. FITTINGS AND VALVES.
4. INSTALL 1" DIAMETER DRAIN HOLE IN THE MANHOLE BASE. IN AREAS OF HIGH GROUNDWATER, PLUG DRAIN HOLE WHEN DIRECTED BY THE ENGINEER.
5. INSTALL MANHOLE FRAME AND COVER ⅛" BELOW FINAL PAVEMENT GRADE.
6. MANHOLE SHALL INCLUDE STEPS OR LADDER.

TERMINAL CLEANOUT

NOT TO SCALE

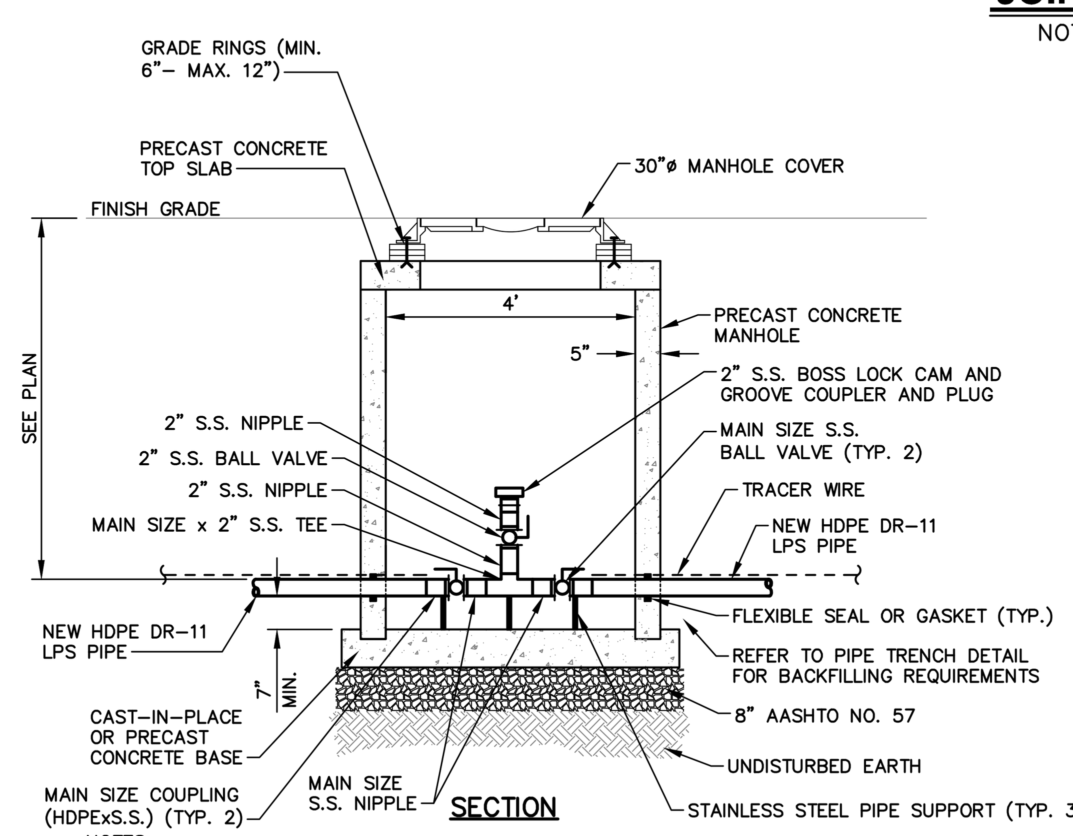

NOTES:
1. SEE PENNDOT PUBLICATIONS 72M, RC–39M FOR ADDITIONAL DETAILS.
2. TRACER WIRE SHALL BE LOOSELY AFFIXED TO SEWER MAIN UTILIZING ZIP TIES (OR SIMILAR METHODS) AND BROUGHT TO THE SURFACE AT THE MANHOLE. CONTRACTOR TO PROVIDE A MINIMUM 36" LENGTH CONTINUOUS LOOP AT EACH TERMINAL END TO FACILITATE LOCATOR CONNECTIONS. INSTALL SEAL NUT ON END OF TRACER WIRE.
3. CONTRACTOR HAS THE OPTION OF USING GROOVED S.S. FITTINGS AND VALVES.
4. INSTALL 1" DIAMETER DRAIN HOLE IN THE MANHOLE BASE. IN AREAS OF HIGH GROUNDWATER, PLUG DRAIN HOLE WHEN DIRECTED BY THE ENGINEER.
5. INSTALL MANHOLE FRAME AND COVER ⅛" BELOW FINAL PAVEMENT GRADE.
6. MANHOLE SHALL INCLUDE STEPS OR LADDER.

IN-LINE CLEANOUT

NOT TO SCALE

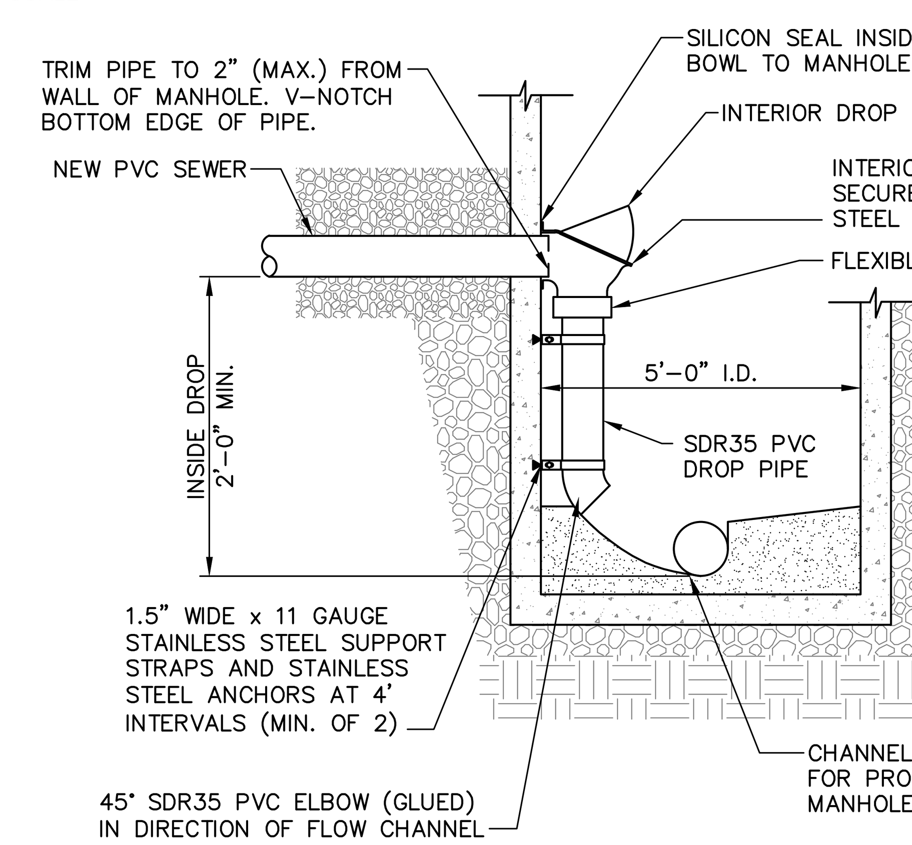

INCOMING SANITARY SEWER ø	DROP PIPE ø
8"	6"
10"	8"

NOTES:
1. SEE SANITARY SEWER MANHOLE DETAIL FOR ADDITIONAL INFORMATION.
2. INSTALL MANHOLE STEPS IN LOCATION THAT DOES NOT CONFLICT WITH DROP CONNECTION.
3. INTERIOR DROP MANHOLE FOR EXISTING SANITARY MANHOLE SHALL ALSO BE IN ACCORDANCE WITH CONNECTION TO EXISTING MANHOLE DETAIL.

INTERIOR DROP MANHOLE

NOT TO SCALE

File name: P:\0016\001650_0428\C3D\Plan Sets\SAN\W0016500428–DT.dwg Layout:2 Sep 02, 2022–11:42am sfocht

NO.	REVISION	DATE	BY

COMMONWEALTH OF PENNSYLVANIA REGISTERED PROFESSIONAL MATTHEW DAVID CICHY ENGINEER PE074220

HRG
Herbert, Rowland & Grubic, Inc.
Engineering & Related Services
AN EMPLOYEE-OWNED COMPANY
369 East Park Drive
Harrisburg, PA 17111
(717) 564-1121
Fax (717) 564-1158
hrg@hrg-inc.com
www.hrg-inc.com

HALIFAX AREA
WATER AND SEWER AUTHORITY
203 ARMSTRONG STREET
HALIFAX, PA 17032
(717) 896-8083

MISCELLANEOUS CONSTRUCTION DETAILS
FOR
HALIFAX TWP. SANITARY SEWER EXTENSION PROJECT
HALIFAX TOWNSHIP DAUPHIN COUNTY PENNSYLVANIA

PROJ. MGR. – JJM
DESIGN– MDC
CADD– BAB
CHECKED–MDC
SCALE– AS NOTED
DATE– AUG. 2022

DRAWING NO. DT-2
SHEET NO. 63 OF 109
PROJECT 001650.0428

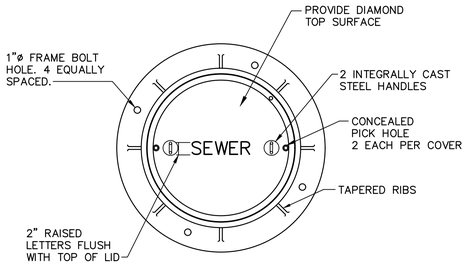

PLAN

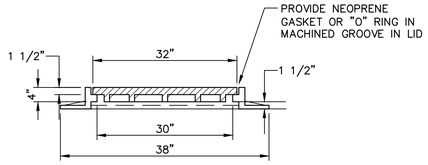

SECTION

NOTES:
1. BEARING SURFACES OF FRAME AND COVER SHALL BE MACHINED.
2. PROVIDE VENTED COVER FOR MANHOLES IDENTIFIED AS "VENTED" ON THE DRAWINGS. VENTED COVERS SHALL HAVE A MINIMUM OF 4–7/8" DIA. HOLES.
3. MACHINE VENTED COVER TO ACCEPT MANHOLE ODOR CONTROL INSERT DISH.

30 " MANHOLE FRAME AND COVER

NOT TO SCALE

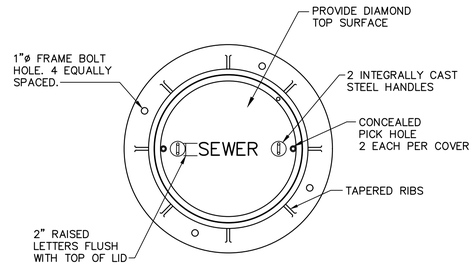

PLAN

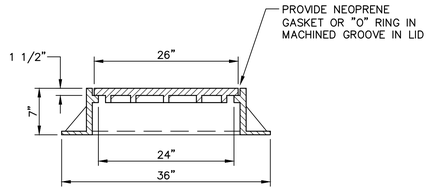

SECTION

NOTES:
1. BEARING SURFACES OF FRAME AND COVER SHALL BE MACHINED.
2. PROVIDE VENTED COVER FOR MANHOLES IDENTIFIED AS "VENTED" ON THE DRAWINGS. VENTED COVERS SHALL HAVE A MINIMUM OF 4–7/8" DIA. HOLES.
3. MACHINE VENTED COVER TO ACCEPT MANHOLE ODOR CONTROL INSERT DISH.

26 " MANHOLE FRAME AND COVER

NOT TO SCALE

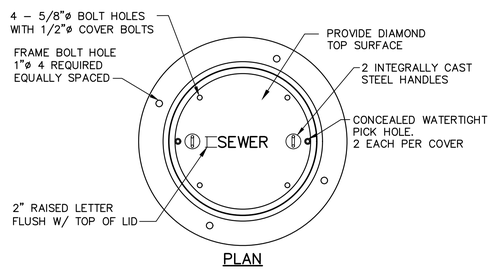

PLAN

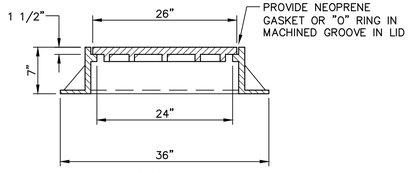

SECTION

NOTES:
1. BEARING SURFACES OF FRAME AND COVER SHALL BE MACHINED.

WFC WATERTIGHT 26" MANHOLE FRAME AND COVER

NOT TO SCALE

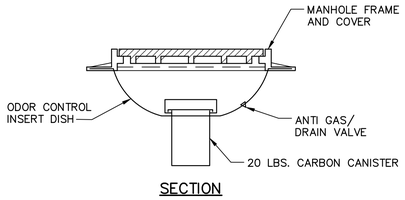

SECTION

MANHOLE ODOR CONTROL INSERT DISH

NOT TO SCALE

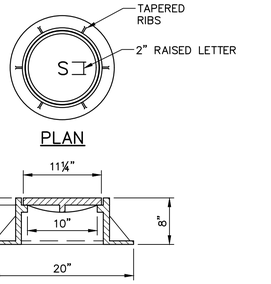

PLAN

SECTION

NOTES:
1. LABEL COVER "S" OR "SEWER"

STANDARD CLEANOUT FRAME AND COVER

NOT TO SCALE

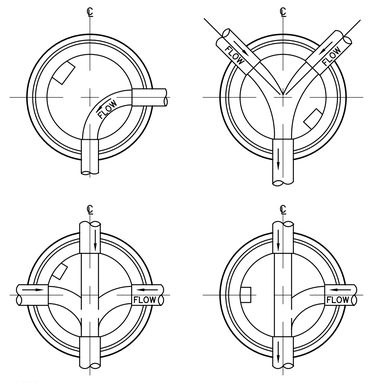

NOTES:
1. ALL BENCHES FOR NEW MANHOLES SHALL SLOPE A MINIMUM OF 2" PER FOOT TOWARD FLOW CHANNEL.
2. FOR EXISTING MANHOLES, RECONSTRUCT CHANNELS TO PERMIT UNOBSTRUCTED FLOWS TO THE OUTLET PIPE. LAYOUT OF THE RECONSTRUCTED FLOW CHANNELS SHALL CONFORM TO THE REQUIREMENTS OF SECTION 33 05 61 AND THIS DETAIL.

TYPICAL MANHOLE CHANNELS DETAIL

NOT TO SCALE

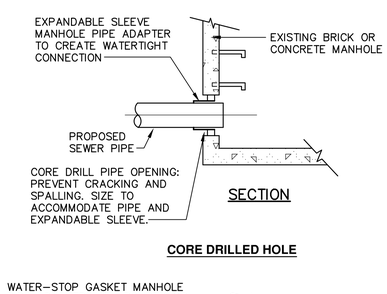

SECTION

CORE DRILLED HOLE

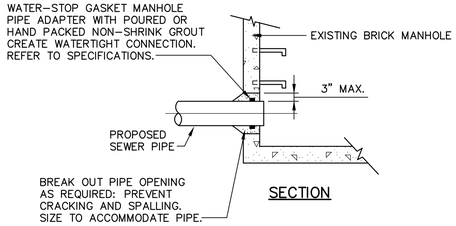

SECTION

CAST-IN-PLACE HOLE

NOTES:
1. KEEP GROUNDWATER, SURFACE WATER AND DEBRIS FROM ENTERING EXISTING FACILITIES.
2. MAINTAIN EXISTING FLOW DURING CONSTRUCTION.
3. BREAKOUT EXISTING CONCRETE/BRICK BENCH AS REQUIRED AND FORM NEW CHANNEL WITH NON–SHRINK GROUT TO ALLOW FOR PROPER FLOW. SEE TYPICAL MANHOLE CHANNEL DETAIL

CEM CONNECTION TO EXISTING MANHOLE DETAIL

NOT TO SCALE

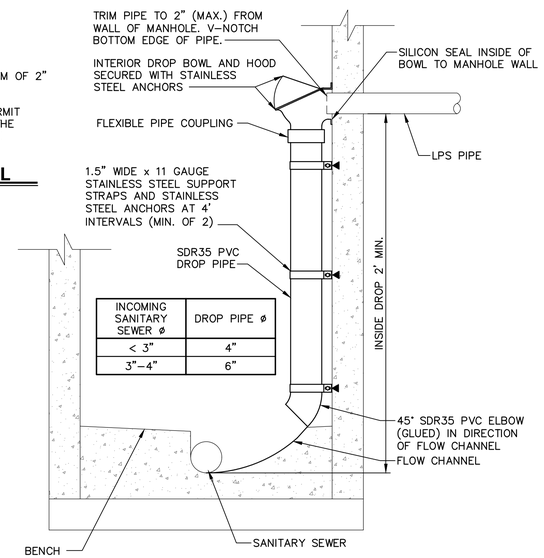

NOTES:
1. REFER TO SPECIFICATIONS FOR DROP SANITARY BOWL AND HOOD, STAINLESS STEEL STRAP AND ANCHOR, AND FLEXIBLE PIPE COUPLING REQUIREMENTS.

MLP LOW PRESSURE SEWER DISCHARGE MANHOLE

NOT TO SCALE

DOGHOUSE MANHOLE BASE

FOUNDATION SECTION VIEW

NOTES:
1. CONSTRUCT A FORMED INVERT FROM EXISTING SEWER PIPE TO ALLOW FLOW TO THE NEW SEWER LINE.
2. POUR FLOW CHANNEL. BENCH HEIGHT TO MATCH CROWN OF PIPE.
3. CUT AND REMOVE THE TOP HALF OF EXISTING PIPE TO WITHIN 6" OF THE MANHOLE WALLS AFTER THE INVERT AND SHELF HAVE BEEN FORMED, AND THE MANHOLE HAS BEEN FULLY TESTED IN ACCORDANCE WITH THE SPECIFICATIONS.
4. PRECAST CONCRETE MANHOLE BASES SHALL BE FABRICATED IN ACCORDANCE WITH SECTION 33 05 13.

DH DOGHOUSE SANITARY MANHOLE BASE

NOT TO SCALE

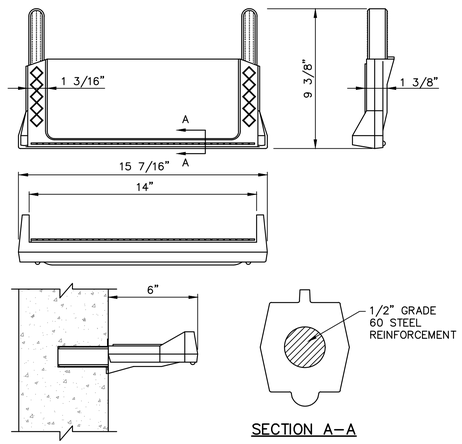

SECTION A–A

COPOLYMER POLYPROPYLENE PLASTIC MANHOLE STEP

NOT TO SCALE

NO.	REVISION	DATE	BY

COMMONWEALTH OF PENNSYLVANIA — REGISTERED PROFESSIONAL — MATTHEW DAVID CICHY — ENGINEER PE074220

HRG
Herbert, Rowland & Grubic, Inc.
Engineering & Related Services
AN EMPLOYEE-OWNED COMPANY

369 East Park Drive
Harrisburg, PA 17111
(717) 564-1121
Fax (717) 564-1158
hrg@hrg-inc.com
www.hrg-inc.com

HALIFAX AREA WATER AND SEWER AUTHORITY
203 ARMSTRONG STREET
HALIFAX, PA 17032
(717) 896-8083

MISCELLANEOUS CONSTRUCTION DETAILS

FOR

HALIFAX TWP. SANITARY SEWER EXTENSION PROJECT

HALIFAX TOWNSHIP DAUPHIN COUNTY PENNSYLVANIA

PROJ. MGR. –	JJM
DESIGN–	MDC
CADD–	BAB
CHECKED–	MDC
SCALE–	AS NOTED
DATE–	AUG. 2022

DRAWING NO. **DT-3**
SHEET NO. **64** OF **109**
PROJECT 001650.0428

File name: P:\2016\001650.0428\CSD\Dwg Set\Utility\001650428-DT.dwg Layout: 3 Sep 02, 2022 - 11:42am aholt

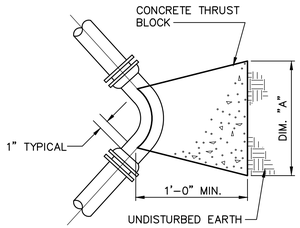

PLAN

ELBOW DIMENSION SCHEDULE											
DIM.	6"-45°	4"-45°	3"-45°	2 1/2"-45°	2"-45°	1 1/4"-45° & 1 1/2"-45°	4"-22 1/2°	3"-22 1/2°	2 1/2"-22 1/2°	4"-11 1/4°	3"-11 1/4°
A	36	24	18	16	14	12	18	16	14	16	12
B	24	16	15	15	14	14	16	15	15	16	14

A & B DIMENSIONS ARE IN INCHES

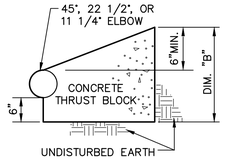

SECTION

NOTES:

1. THRUST BLOCKS ARE NOT REQUIRED WHEN FUSED HDPE PIPE IS UTILIZED.

TB1 HORIZONTAL THRUST BLOCK DETAILS

NOT TO SCALE

TEE DIMENSION SCHEDULE LATERAL SIZE					
DIM.	1 1/4" & 1 1/2"	2"	2 1/2"	3"	4"
A	14"	16"	18"	20"	22"
B	14"	14"	15"	15"	16"

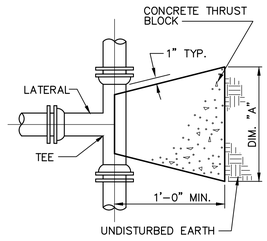

PLAN

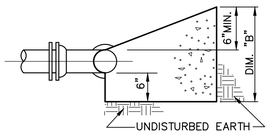

SECTION

NOTES:

1. THRUST BLOCKS ARE NOT REQUIRED WHEN FUSED HDPE PIPE IS UTILIZED.

TB2 HORIZONTAL THRUST BLOCK DETAILS (LOW PRESSURE SEWERS)

NOT TO SCALE

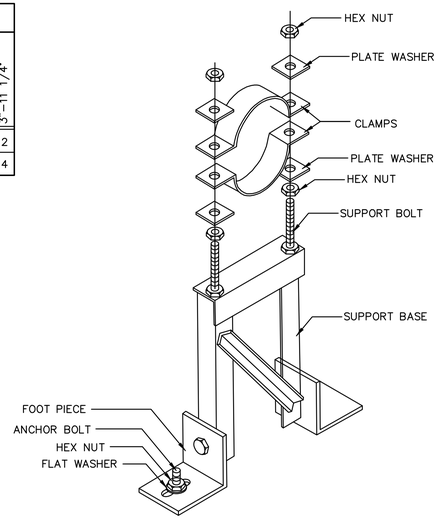

NOTES:

1. ALL MATERIAL SHALL BE 304 SS.

PIPE SUPPORT DETAIL

NOT TO SCALE

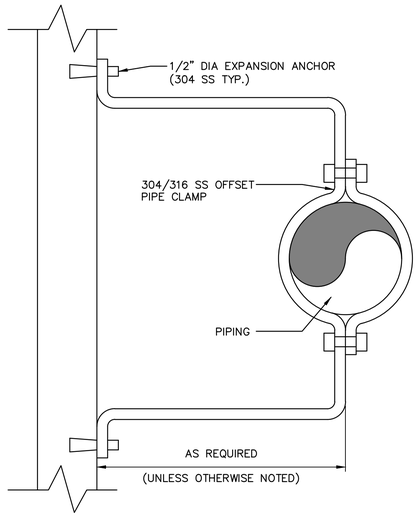

NOTES:

1. MAXIMUM CENTER TO CENTER SPACING OF PIPE STANDOFF SHALL BE 4'-0".

WALL SUPPORT DETAIL

NOT TO SCALE

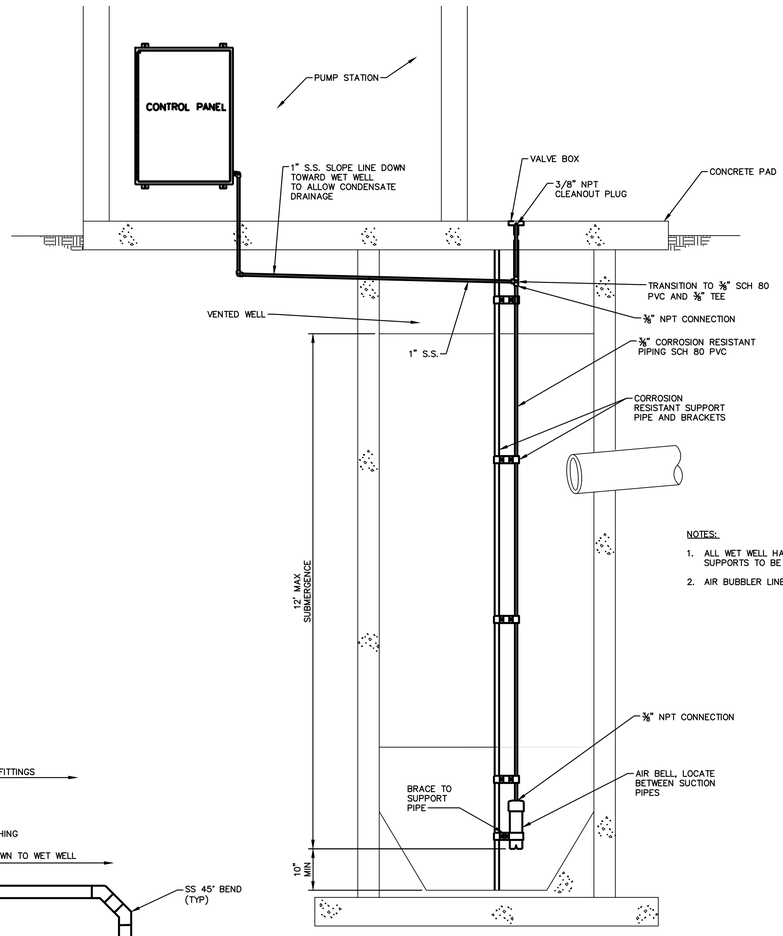

NOTES:

1. ALL WET WELL HARDWARE, BRACKETS AND SUPPORTS TO BE CORROSION RESISTANT.
2. AIR BUBBLER LINE MUST BE AIR TIGHT.

BUBBLER DETAILS

SCALE: NOT TO SCALE

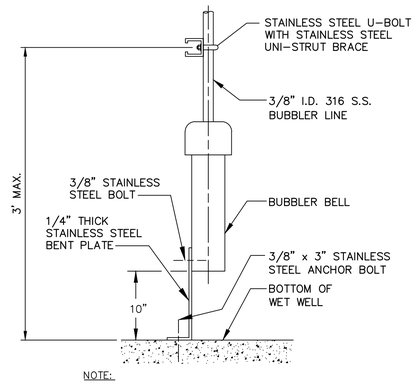

NOTE:

1. LOCATE BETWEEN PUMP SUCTION PIPES. REFER TO WET WELL PIPE BRACE PLAN DETAIL.

BUBBLER BELL

NOT TO SCALE

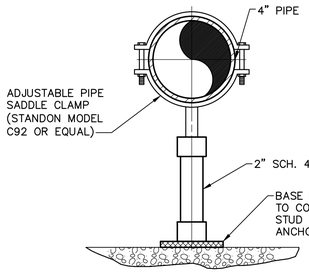

PIPE SUPPORT

NOT TO SCALE

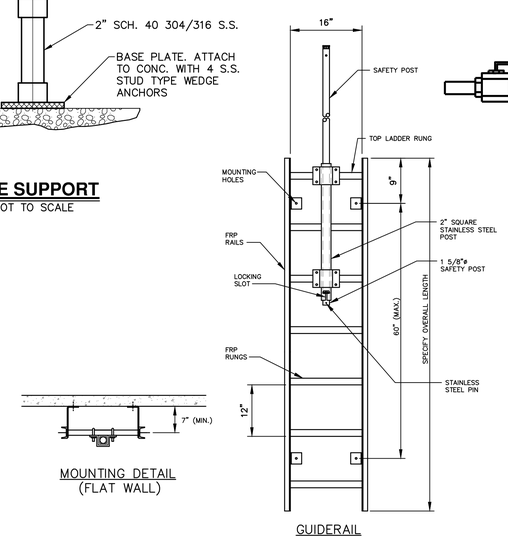

LADDER DETAIL

NOT TO SCALE

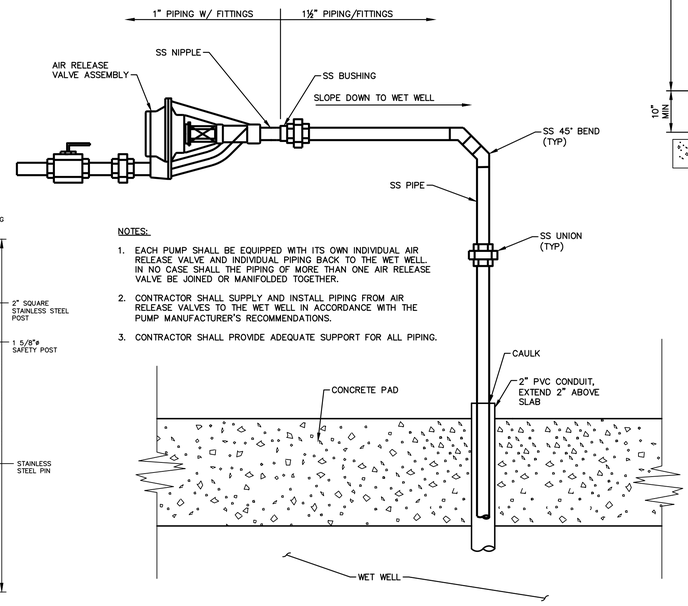

NOTES:

1. EACH PUMP SHALL BE EQUIPPED WITH ITS OWN INDIVIDUAL AIR RELEASE VALVE AND INDIVIDUAL PIPING BACK TO THE WET WELL. IN NO CASE SHALL THE PIPING OF MORE THAN ONE AIR RELEASE VALVE BE JOINED OR MANIFOLDED TOGETHER.
2. CONTRACTOR SHALL SUPPLY AND INSTALL PIPING FROM AIR RELEASE VALVES TO THE WET WELL IN ACCORDANCE WITH THE PUMP MANUFACTURER'S RECOMMENDATIONS.
3. CONTRACTOR SHALL PROVIDE ADEQUATE SUPPORT FOR ALL PIPING.

AIR RELEASE LINE DETAILS

SCALE: NOT TO SCALE

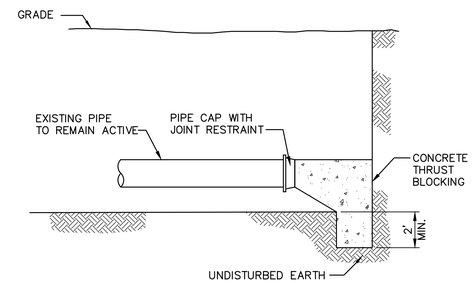

PIPE CAP AND THRUST BLOCK DETAIL

NOT TO SCALE

NO.	REVISION	DATE	BY

COMMONWEALTH OF PENNSYLVANIA — REGISTERED PROFESSIONAL — MATTHEW DAVID CICHY — ENGINEER PE074220

HRG
Herbert, Rowland & Grubic, Inc.
Engineering & Related Services
AN EMPLOYEE-OWNED COMPANY
369 East Park Drive
Harrisburg, PA 17111
(717) 564-1121
Fax (717) 564-1158
hrg@hrg-inc.com
www.hrg-inc.com

HALIFAX AREA
WATER AND SEWER AUTHORITY
203 ARMSTRONG STREET
HALIFAX, PA 17032
(717) 896-8083

MISCELLANEOUS CONSTRUCTION DETAILS

FOR

HALIFAX TWP. SANITARY SEWER EXTENSION PROJECT

HALIFAX TOWNSHIP DAUPHIN COUNTY PENNSYLVANIA

PROJ. MGR. –	JJM
DESIGN–	MDC
CADD–	BAB
CHECKED–	MDC
SCALE–	AS NOTED
DATE–	AUG. 2022

DRAWING NO. DT-4

SHEET NO. 65 OF 109

PROJECT 001650.0428

File name: P:\001\001650.0428\CAD\Plan Sets\SAN\001650428-ST.dwg Layout: 6 Sep 02, 2022 - 11:42am sfrank

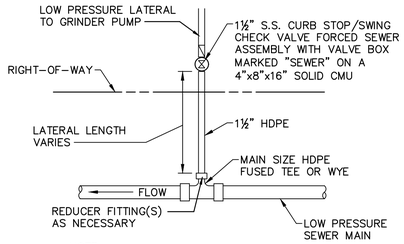

NOTE:
1. FUTURE LOW PRESSURE LATERAL CONNECTIONS SHALL HAVE A 3' MIN. HDPE STUB WITH WATERTIGHT CAP UPSTREAM OF THE CHECK VALVE.

PLC LOW PRESSURE LATERAL CONNECTION
NOT TO SCALE

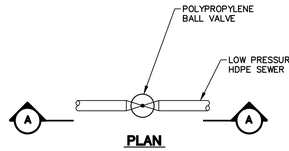

PLAN

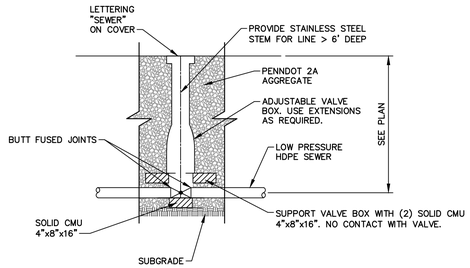

SECTION "A-A"

NOTE:
1. IF EXTENSIONS ARE NECESSARY CONTRACTOR SHALL SET "PLUMB" AND ALIGN PROPERLY FOR ACCESS TO OPERATING NUT.

BVA BALL VALVE ASSEMBLY - LOW PRESSURE SEWER
NOT TO SCALE

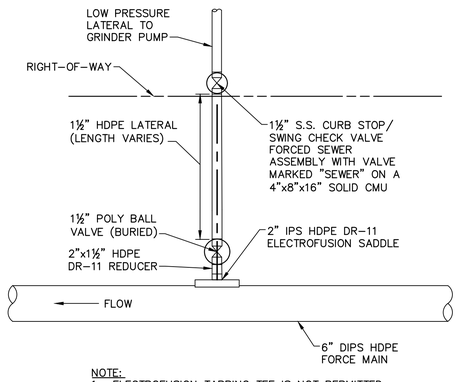

NOTE:
1. ELECTROFUSION TAPPING TEE IS NOT PERMITTED.

FORCE MAIN LATERAL CONNECTION
NOT TO SCALE

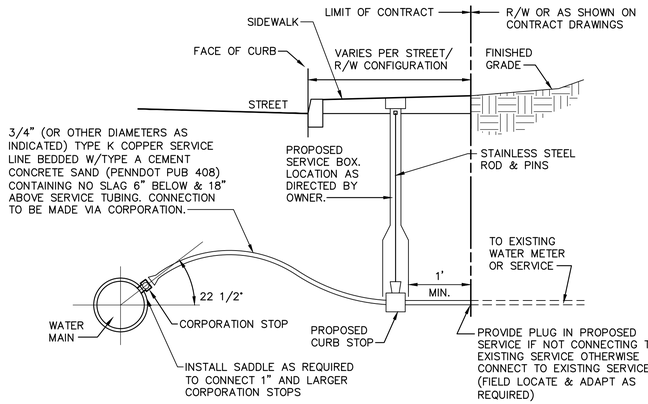

NOTES:
1. ALL COPPER FITTINGS TO BE COMPRESSION TYPE.
2. INSTALL DETECTION TAPE IN ACCORDANCE WITH TRENCH DETAIL.

WATER SERVICE LINE INSTALLATION DETAIL
NOT TO SCALE

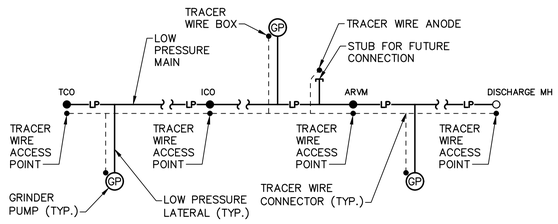

NOTES:
1. WIRE SHOWN AWAY FROM PIPE FOR CLARITY. WIRE SHALL BE INSTALLED ON THE BOTTOM SIDE OF THE PIPE BELOW THE SPRING LINE. THE WIRE SHALL BE FASTENED TO THE PIPE WITH TAPE OR PLASTIC TIES AT 5' INTERVALS.
2. PROVIDE A MAGNESIUM GROUND ROD AT LOCATIONS AS REQUIRED TO BE ABLE TO LOCATE SYSTEM.

TW TRACER WIRE SCHEMATIC - LOW PRESSURE
NOT TO SCALE

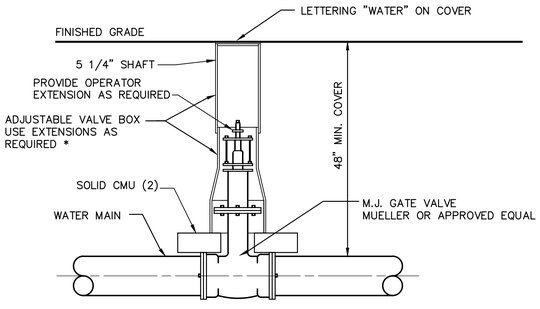

* NOTE: IF EXTENSIONS ARE NECESSARY CONTRACTOR SHALL SET "PLUMB" AND ALIGN PROPERLY FOR ACCESS TO OPERATING NUT.

TYPICAL GATE VALVE AND VALVE BOX DETAIL
NOT TO SCALE

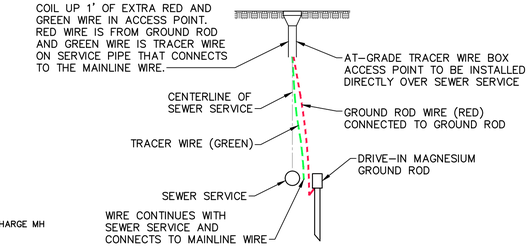

TRACER WIRE BOX DETAIL
NOT TO SCALE

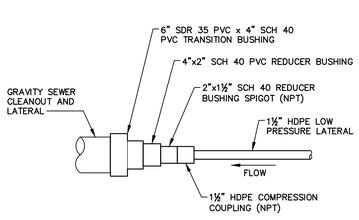

LOW PRESSURE TO GRAVITY SEWER LATERAL CONNECTION
NOT TO SCALE

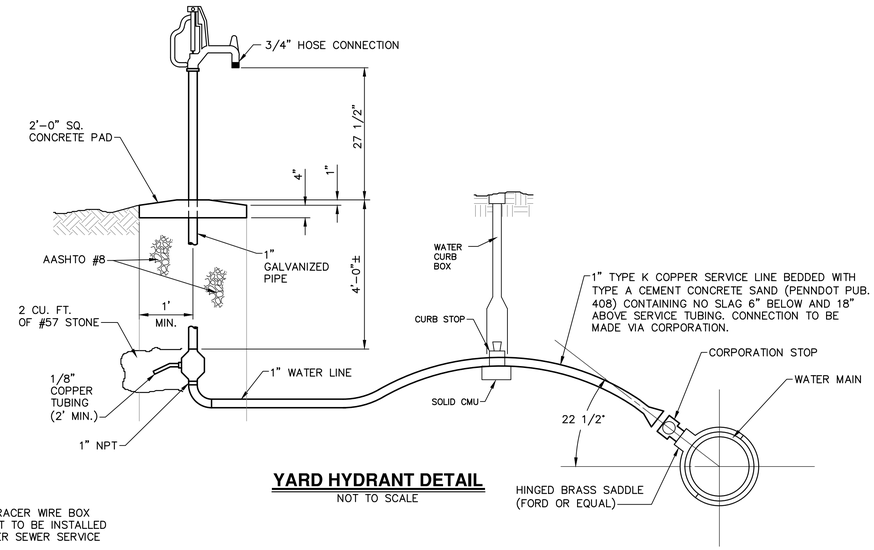

YARD HYDRANT DETAIL
NOT TO SCALE

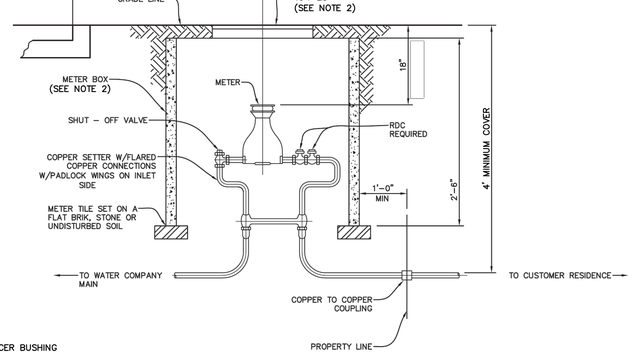

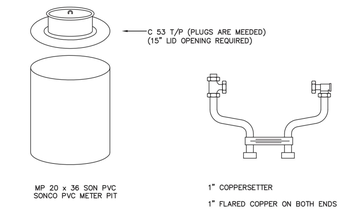

NOTES:
1. THIS SHEET DETAILS A SERVICE LINE INSTALLATION THAT INCLUDES AN OUTSIDE METER PIT.
2. A 20" DIAMETER METER PIT IS REQUIRED FOR USE WITH A 1" METER. LID OPENING SHALL BE 15"
3. METER SETTER SHALL BE EQUIPPED WITH A FLANGED ANGLE INVERTED KEY SHUTOFF VALVE AND A CARTRIDGE ANGLE STYLE DUAL CHECK BACKFLOW DEVICE. METER SETTER SHALL BE INSTALLED 18" FROM BOTTOM OF LID TO TOP OF METER.

WATER METER PIT DETAIL
NOT TO SCALE

NO.	REVISION	DATE	BY

COMMONWEALTH OF PENNSYLVANIA — REGISTERED PROFESSIONAL — MATTHEW DAVID CICHY — ENGINEER PE074220

HRG
Herbert, Rowland & Grubic, Inc.
Engineering & Related Services
AN EMPLOYEE-OWNED COMPANY
369 East Park Drive
Harrisburg, PA 17111
(717) 564-1121
Fax (717) 564-1158
hrg@hrg-inc.com
www.hrg-inc.com

HALIFAX AREA
WATER AND SEWER AUTHORITY
203 ARMSTRONG STREET
HALIFAX, PA 17032
(717) 896-8083

MISCELLANEOUS CONSTRUCTION DETAILS
FOR
HALIFAX TWP. SANITARY SEWER EXTENSION PROJECT
HALIFAX TOWNSHIP DAUPHIN COUNTY PENNSYLVANIA

PROJ. MGR. –	JJM
DESIGN–	MDC
CADD–	BAB
CHECKED–	MDC
SCALE–	AS NOTED
DATE–	AUG. 2022

DRAWING NO. **DT-5**
SHEET NO. 66 OF 109
PROJECT 001650.0428

File name: P:\001650\001650.0428\530\Plan Sets\SAN\W001650428-ST.mxd Layout:5 Sep 02, 2022 - 11:50am ahoch

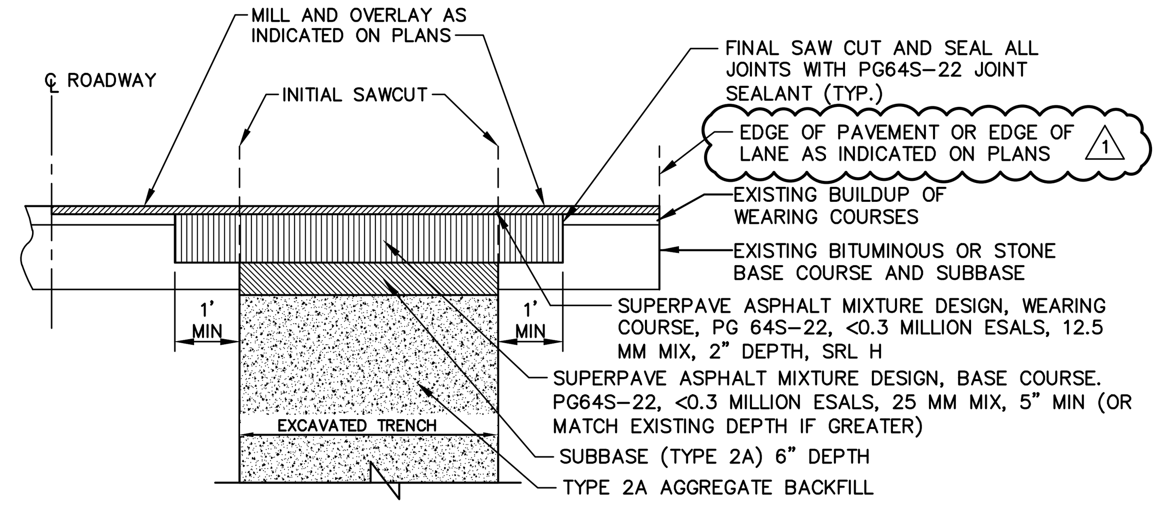

NOTES

1. EXPOSED VERTICAL AND HORIZONTAL SURFACES SHALL BE PREPARED AS PER PUB. 408, SECT. 409.3(g)
2. IF THE INITIAL SAWCUT IS WITHIN 3' OF THE CURB, EDGE OF PAVEMENT, OR EXISTING PAVEMENT JOINT, THE ENTIRE AREA WILL BE REPLACED.
3. IF MILL AND OVERLAY IS NOT SPECIFIED ON PLANS, WEARING COURSE IS ONLY APPLIED TO FINAL SAWCUT LIMITS.

PENNDOT PAVEMENT RESTORATION SR 4013 AND SR 4014 (S-4.03)

NOT TO SCALE

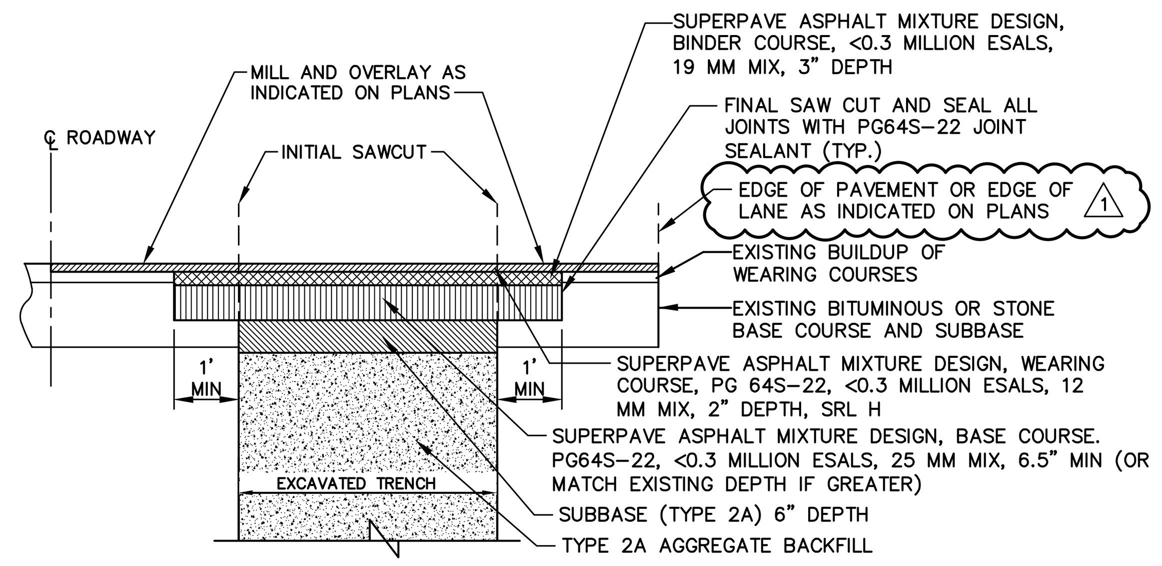

NOTES

1. EXPOSED VERTICAL AND HORIZONTAL SURFACES SHALL BE PREPARED AS PER PUB. 408, SECT. 409.3(g)
2. IF THE INITIAL SAWCUT IS WITHIN 3' OF THE CURB, EDGE OF PAVEMENT, OR EXISTING PAVEMENT JOINT, THE ENTIRE AREA WILL BE REPLACED.
3. IF MILL AND OVERLAY IS NOT SPECIFIED ON PLANS, WEARING COURSE IS ONLY APPLIED TO FINAL SAWCUT LIMITS.

PENNDOT PAVEMENT RESTORATION SR 0225 (S-4.01)

NOT TO SCALE

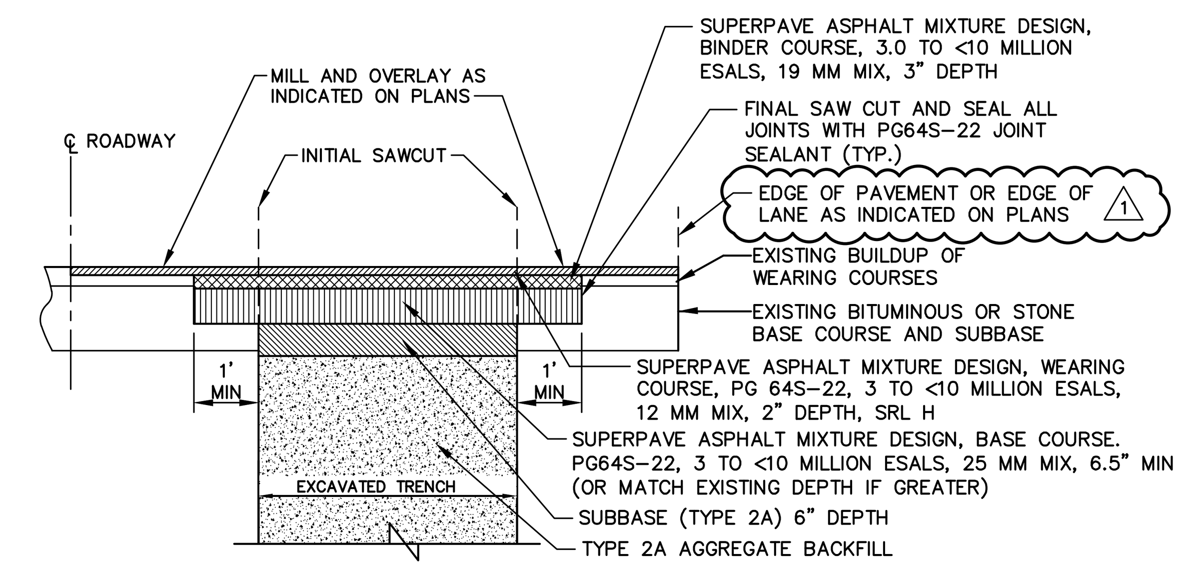

NOTES

1. EXPOSED VERTICAL AND HORIZONTAL SURFACES SHALL BE PREPARED AS PER PUB. 408, SECT. 409.3(g)
2. IF THE INITIAL SAWCUT IS WITHIN 3' OF THE CURB, EDGE OF PAVEMENT, OR EXISTING PAVEMENT JOINT, THE ENTIRE AREA WILL BE REPLACED.
3. IF MILL AND OVERLAY IS NOT SPECIFIED ON PLANS, WEARING COURSE IS ONLY APPLIED TO FINAL SAWCUT LIMITS.

PENNDOT PAVEMENT RESTORATION SR 0147 (S-4.02)

NOT TO SCALE

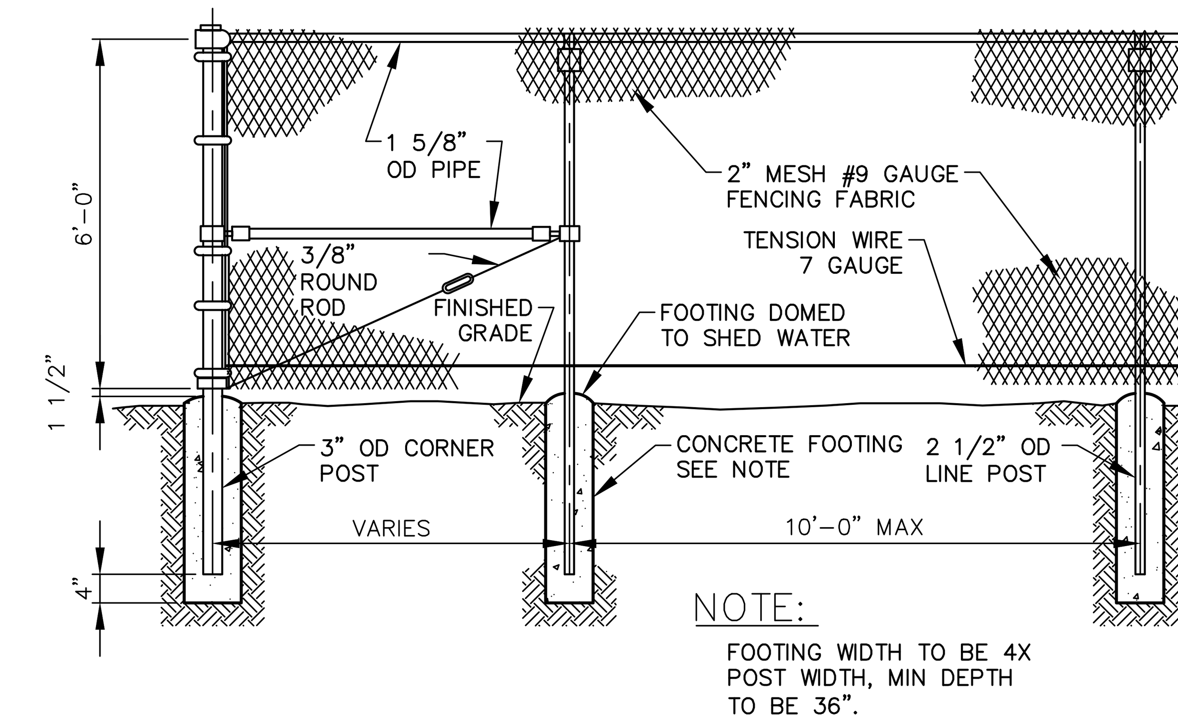

CHAIN LINK FENCE

NOT TO SCALE

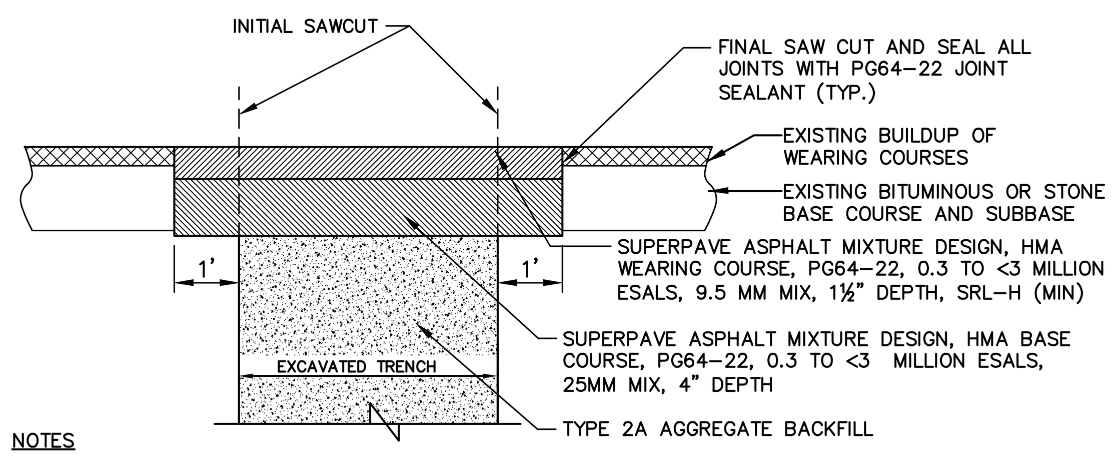

NOTES

1. EXPOSED VERTICAL AND HORIZONTAL SURFACES SHALL BE PREPARED AS PER PUB. 408, SECT. 409.3(g)
2. IF THE INITIAL SAWCUT IS WITHIN 3' OF THE CURB, EDGE OF PAVEMENT, OR EXISTING PAVEMENT JOINT, THE ENTIRE AREA WILL BE REPLACED.

TOWNSHIP PAVEMENT RESTORATION (S-3.01)

NOT TO SCALE

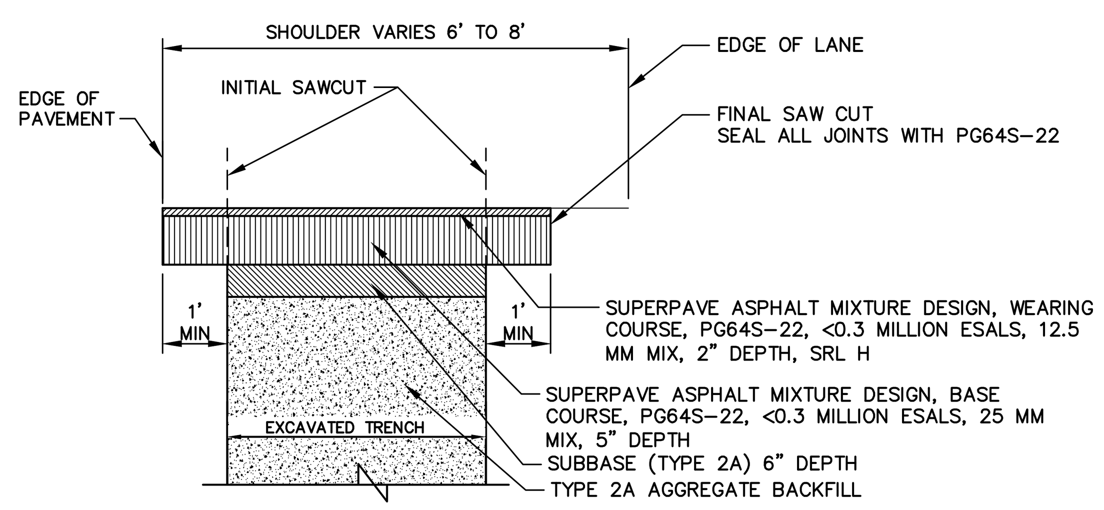

NOTES

1. EXPOSED VERTICAL AND HORIZONTAL SURFACES SHALL BE PREPARED AS PER PUB. 408, SECT. 409.3(g)
2. IF THE INITIAL SAWCUT IS WITHIN 3' OF THE CURB, EDGE OF PAVEMENT, OR EXISTING PAVEMENT JOINT, THE ENTIRE AREA WILL BE REPLACED.
3. THE PAVEMENT DESIGN FOR SR SR 0147 SHALL BE 3 TO <10 MILLION ESALS.

PENNDOT SHOULDER RESTORATION ONLY SR 0147 AND SR 0225 (S-4.04)

NOT TO SCALE

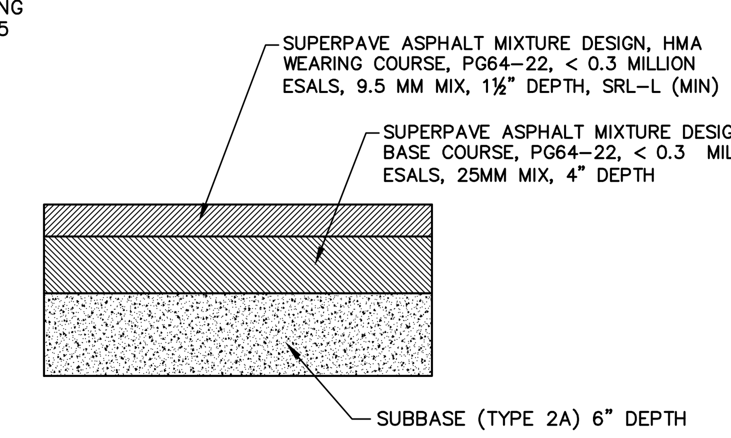

NOTES

1. EXPOSED VERTICAL AND HORIZONTAL SURFACES SHALL BE PREPARED AS PER PUB. 408, SECT. 409.3(g)

PUMP STATION PAVEMENT

NOT TO SCALE

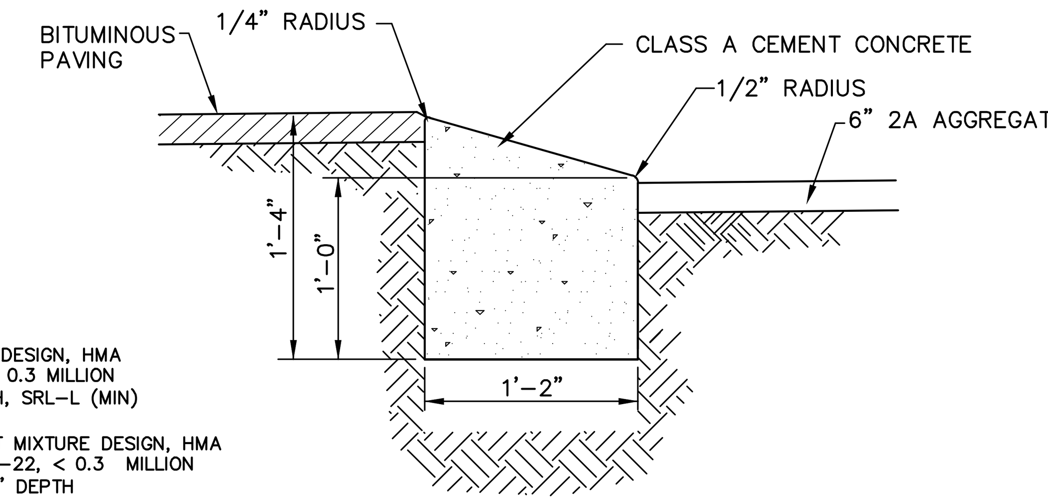

SLANT CURB DETAIL

NOT TO SCALE

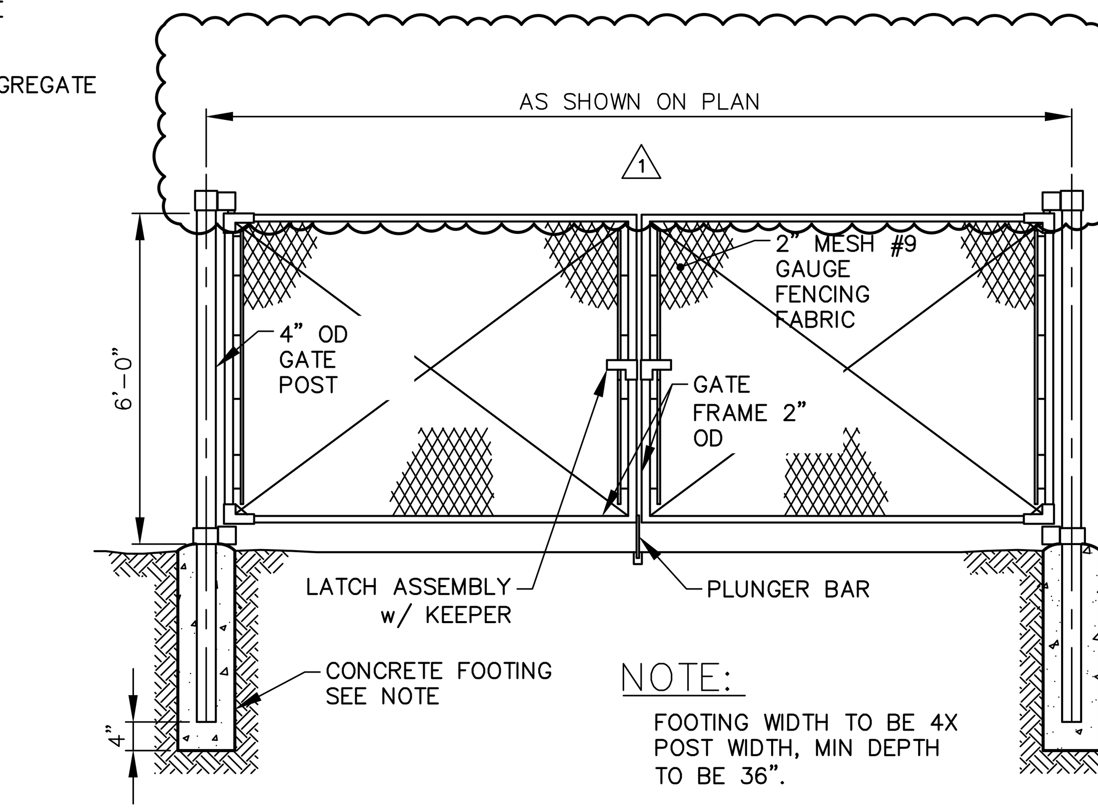

DOUBLE SWING GATE

NOT TO SCALE

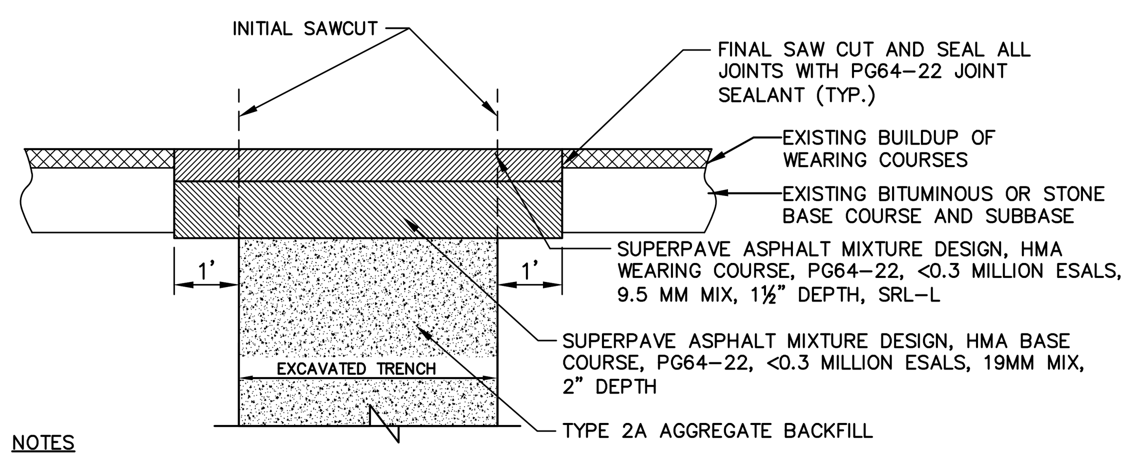

NOTES

1. EXPOSED VERTICAL AND HORIZONTAL SURFACES SHALL BE PREPARED AS PER PUB. 408, SECT. 409.3(g)
2. IF THE INITIAL SAWCUT IS WITHIN 3' OF THE CURB, EDGE OF PAVEMENT, OR EXISTING PAVEMENT JOINT, THE ENTIRE AREA WILL BE REPLACED.
3. IF EXISTING DRIVEWAY IS GRAVEL RESTORE WITH 2A SUBBASE TO MATCH EXISTING DEPTH.

PRIVATE ROAD/DRIVEWAY PAVEMENT RESTORATION (S-2.01)

NOT TO SCALE

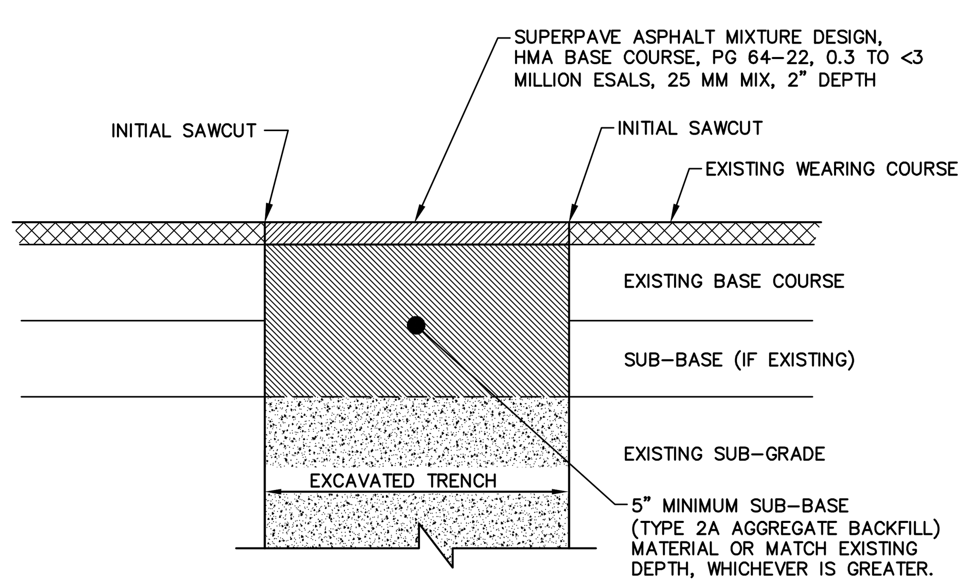

TEMPORARY PAVEMENT RESTORATION

NOT TO SCALE

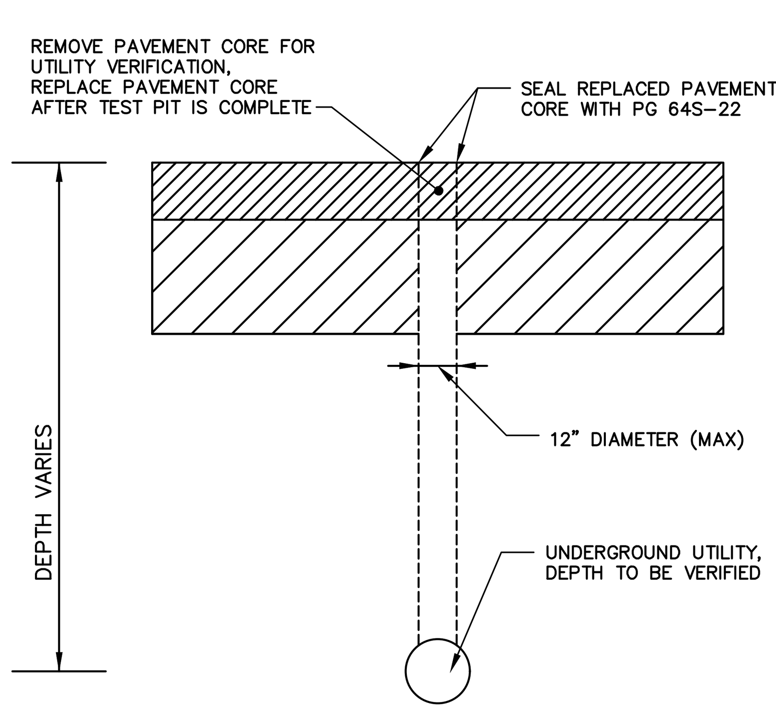

TH2 MUNICIPAL/PRIVATE TEST HOLE EXCAVATION/RESTORATION DETAIL

NOT TO SCALE

NOTE:
1. CONTRACTOR TO UTILIZE THIS DETAIL FOR TEST HOLES USED WITHIN MUNICIPAL/PRIVATE RIGHT-OF-WAY TO LOCATE EXISTING UNDERGROUND UTILITIES.
2. VACUUM EXCAVATE TO LOCATE UTILITY, BACKFILL AND COMPACT WITH SUITABLE MATERIAL.
3. FILL BORE HOLE TO SURFACE IF NOT WITHIN PAVEMENT.

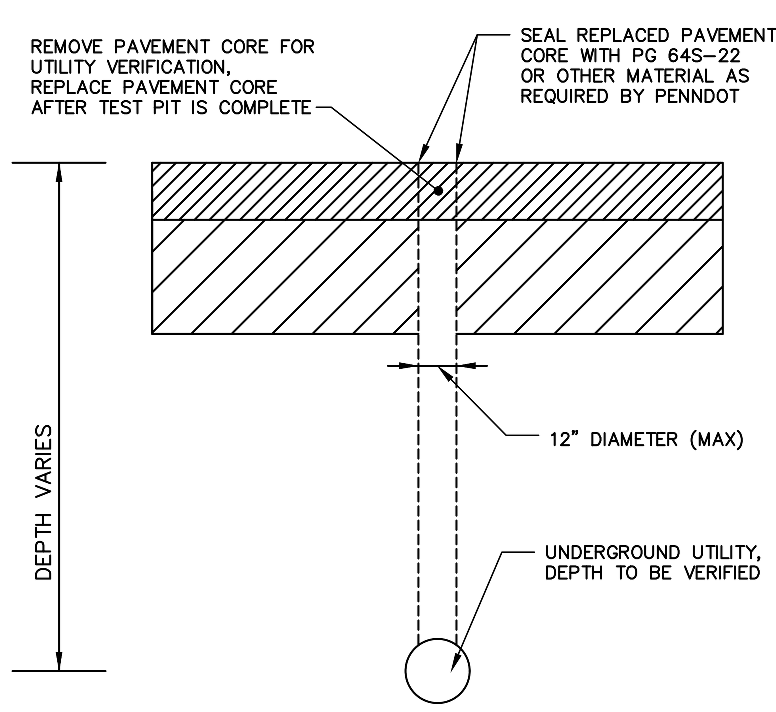

TH1 PENNDOT TEST HOLE EXCAVATION/RESTORATION DETAIL

NOT TO SCALE

NOTE:
1. CONTRACTOR TO UTILIZE THIS DETAIL FOR TEST HOLES USED WITHIN PENNDOT RIGHT-OF-WAY TO LOCATE EXISTING UNDERGROUND UTILITIES PER CHAPTER 459.8.(g)(6)
2. VACUUM EXCAVATE TO LOCATE UTILITY, REPLACE EXCAVATED MATERIAL WITH FLOWABLE BACKFILL
3. FILL BORE HOLE TO SURFACE IF NOT WITHIN PAVEMENT.

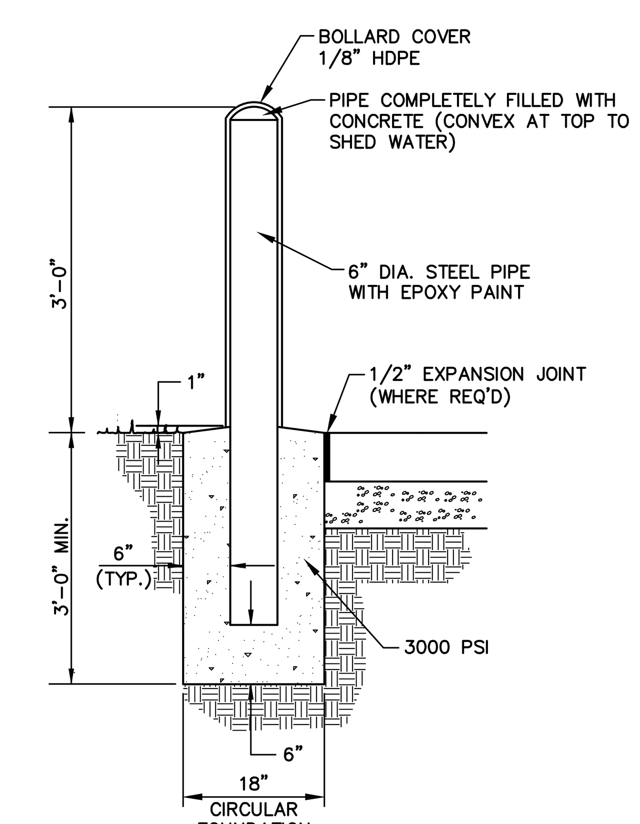

NOTE:
BOLLARD COVER SHALL BE BOLLARD GUARD AS MANUFACTURED BY INNOPLAST, SETON, OR EQUAL. BOLLARD TAPE AND REFLECTIVE COLORS SHALL BE SELECTED BY OWNER. INSTALL IN ACCORDANCE WITH MANUFACTURER'S RECOMMENDATIONS.

SB STEEL BOLLARD

NOT TO SCALE

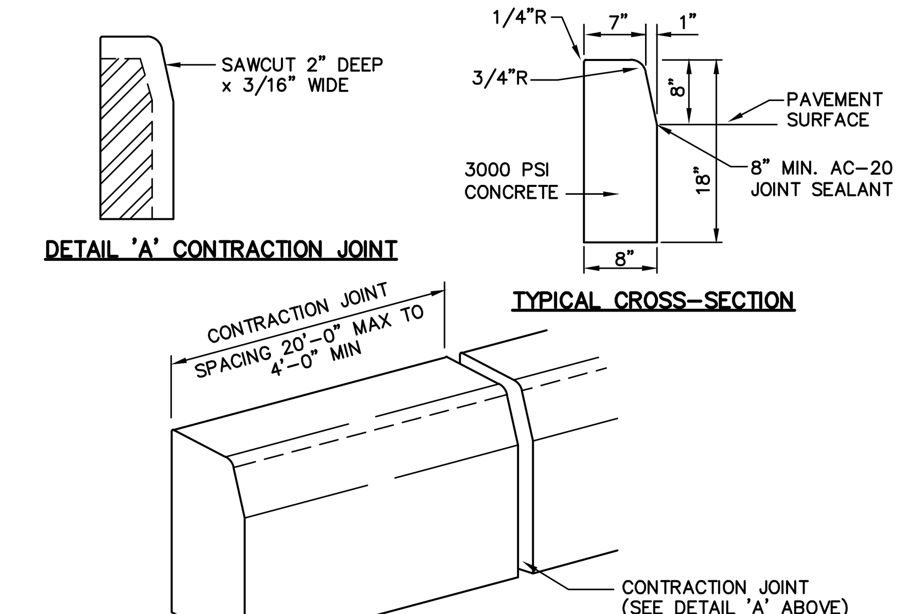

NOTES:

1. CONSTRUCT CURBING IN ACCORDANCE WITH PENNDOT SPECIFICATIONS PUBLICATION 408 AND ROADWAY CONSTRUCTION DRAWINGS (RC-64)
2. MATCH REVEAL OF EXISTING CONCRETE CURB, COORDINATE WITH ENGINEER.

CC CONCRETE CURB DETAIL

NOT TO SCALE

File name: P:\0016\001650_0428\C3D\Plan Sets\SAN\W0016500428-DT.dwg Layout: 6 Oct 05, 2022-3:58pm sfocht

NO.	REVISION	DATE	BY
1	ADDENDUM NO. 2	10/5/22	RSF

COMMONWEALTH OF PENNSYLVANIA REGISTERED PROFESSIONAL ENGINEER MATTHEW DAVID CICHY PE074220

HRG Herbert, Rowland & Grubic, Inc. Engineering & Related Services AN EMPLOYEE-OWNED COMPANY
369 East Park Drive
Harrisburg, PA 17111
(717) 564-1121
Fax (717) 564-1158
hrg@hrg-inc.com
www.hrg-inc.com

HALIFAX AREA
WATER AND SEWER AUTHORITY
203 ARMSTRONG STREET
HALIFAX, PA 17032
(717) 896-8083

MISCELLANEOUS CONSTRUCTION DETAILS
FOR
HALIFAX TWP. SANITARY SEWER EXTENSION PROJECT
HALIFAX TOWNSHIP DAUPHIN COUNTY PENNSYLVANIA

PROJ. MGR. – JJM
DESIGN– MDC
CADD– BAB
CHECKED–MDC
SCALE– AS NOTED
DATE– AUG. 2022

DRAWING NO. **DT-6**
SHEET NO. 67 OF 109
PROJECT 001650.0428

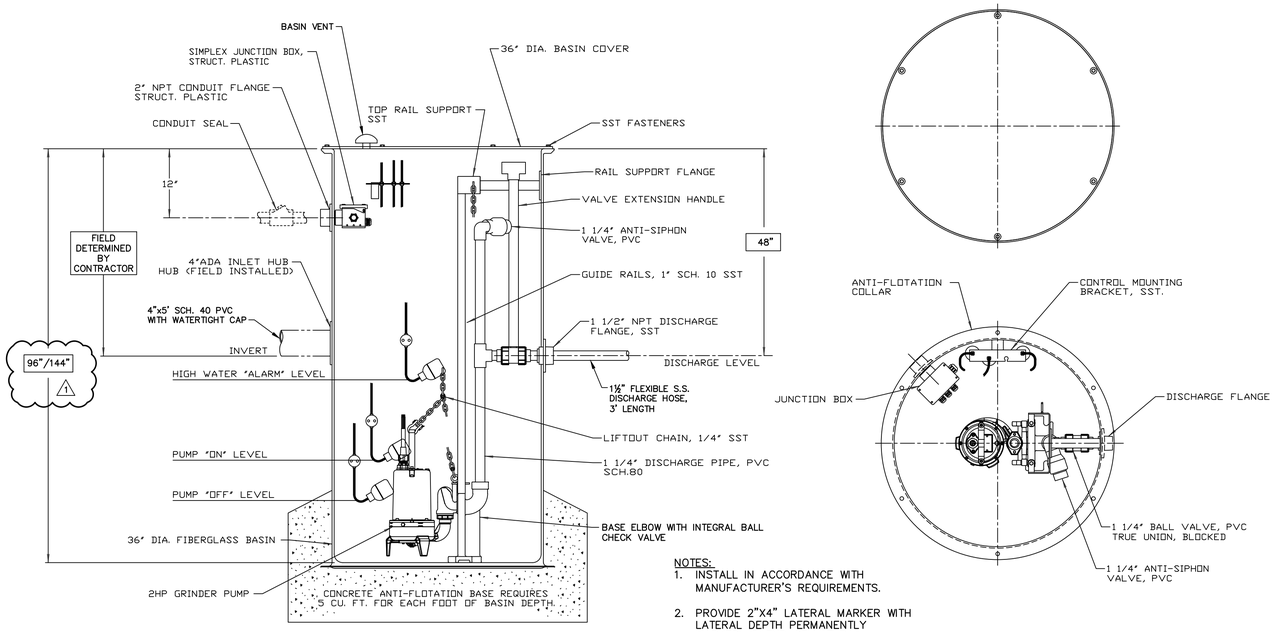

NOTES:
1. INSTALL IN ACCORDANCE WITH MANUFACTURER'S REQUIREMENTS.
2. PROVIDE 2"X4" LATERAL MARKER WITH LATERAL DEPTH PERMANENTLY MARKED AT END OF LATERAL.

SIMPLEX GRINDER PUMP DETAIL
NOT TO SCALE

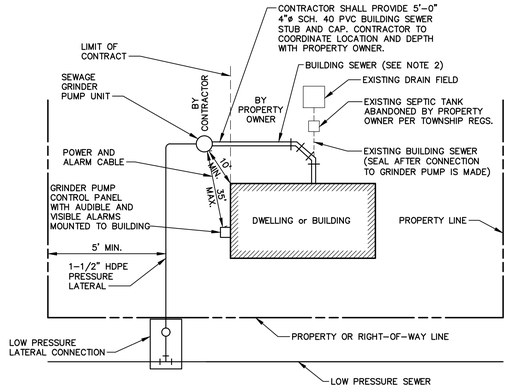

PLAN

NOTES:
1. GRINDER PUMP MUST BE LOCATED A MINIMUM OF 10 FT. FROM STRUCTURE.
2. BUILDING SEWER SHALL BE CONSTRUCTED IN ACCORDANCE WITH DEP GUIDELINES, TOWNSHIP RULES AND REGS., AND INTERNATIONAL PLUMBING CODES.
3. CONTRACTOR TO COORDINATE LOCATION OF GRINDER PUMP UNIT AND CONTROL PANEL WITH PROPERTY OWNER.
4. DISTANCE BETWEEN DWELLING AND PRESSURE LATERAL SHALL BE 5' MINIMUM, OR AS REQUIRED BY LOCAL CODES, ORDINANCES, RULES AND REGULATIONS OF GOVERNING SERVICE AUTHORITY.

GPI GRINDER PUMP INSTALLATION SCHEMATIC
NOT TO SCALE

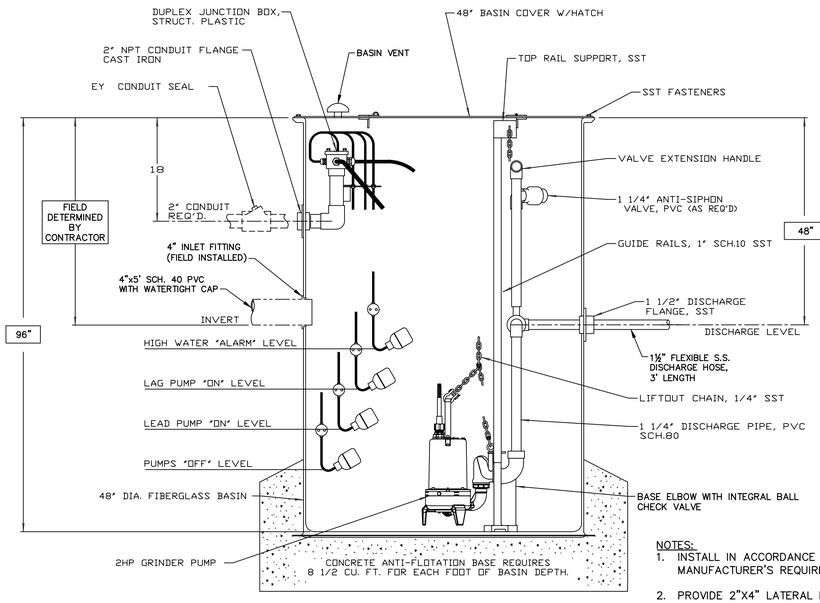

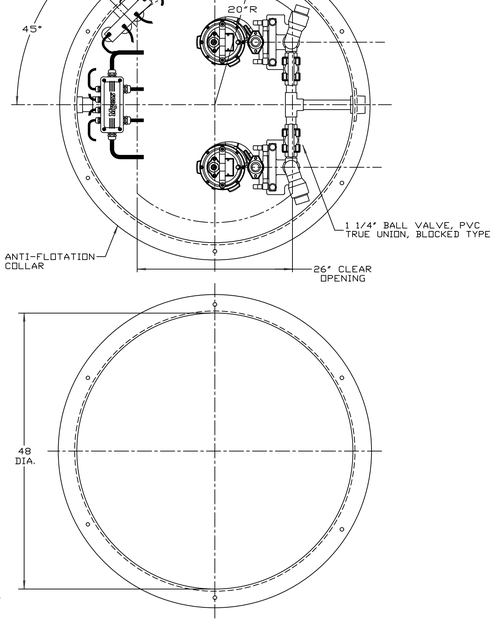

NOTES:
1. INSTALL IN ACCORDANCE WITH MANUFACTURER'S REQUIREMENTS.
2. PROVIDE 2"X4" LATERAL MARKER WITH LATERAL DEPTH PERMANENTLY MARKED AT END OF LATERAL.

DUPLEX GRINDER PUMP STATION DETAIL
NOT TO SCALE

NO.	REVISION	DATE	BY
1	ADDENDUM NO. 1	9/23/22	RSF

REGISTERED PROFESSIONAL
MATTHEW DAVID CICHY
ENGINEER PE074220
COMMONWEALTH OF PENNSYLVANIA

HRG
Herbert, Rowland & Grubic, Inc.
Engineering & Related Services
AN EMPLOYEE-OWNED COMPANY
369 East Park Drive
Harrisburg, PA 17111
(717) 564-1121
Fax (717) 564-1158
hrg@hrg-inc.com
www.hrg-inc.com

HALIFAX AREA WATER AND SEWER AUTHORITY
203 ARMSTRONG STREET
HALIFAX, PA 17032
(717) 896-8083

MISCELLANEOUS CONSTRUCTION DETAILS
FOR
HALIFAX TWP. SANITARY SEWER EXTENSION PROJECT
HALIFAX TOWNSHIP DAUPHIN COUNTY PENNSYLVANIA

PROJ. MGR.	JJM
DESIGN	MDC
CADD	BAB
CHECKED	MDC
SCALE	AS NOTED
DATE	AUG. 2022

DRAWING NO. **DT-7**
SHEET NO. **68** OF **109**
PROJECT 001650.0428

File name: P:\001650\001650-0428\CAD\Plan Sets\SAN\001650428-DT.dwg Layout:7 Sep 23, 2022 - 8:58am abbott

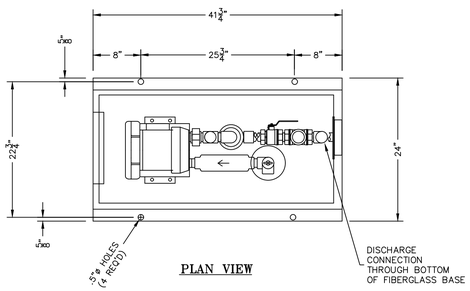

PLAN VIEW

NOTE:
PROVIDE WEATHER ENCLOSURE OVER UNIT AT THE CREEK ROAD PUMP STATION

WET WELL AERATION UNIT

NOT TO SCALE

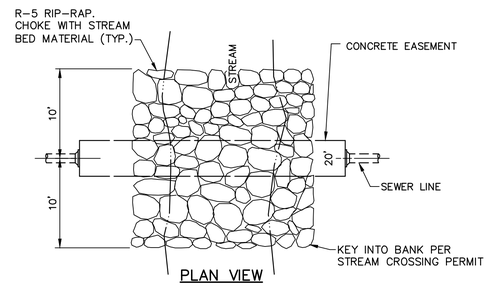

PLAN VIEW

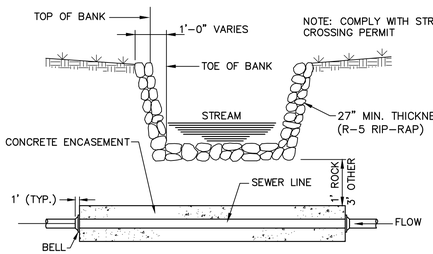

STREAM CROSSING DETAIL

NOT TO SCALE

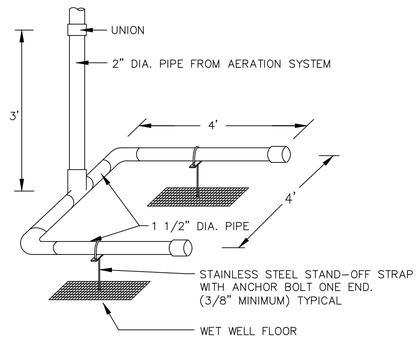

NOTES: LOCATE HEADER PIPE 12" ABOVE BOTTOM OF WET WELL.
HEADER PIPING MUST BE INSTALLED LEVEL.
HEADER PIPING SHALL BE SCHEDULE 80 PVC.

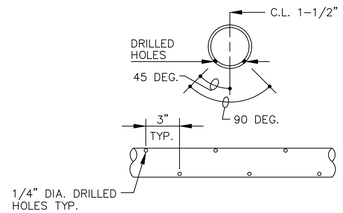

BOTTOM VIEW

WET WELL AERATION HEADER PIPING

NOT TO SCALE

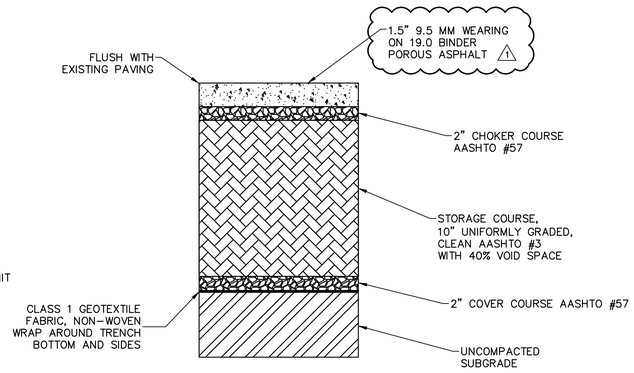

POROUS ASPHALT DETAIL

NOT TO SCALE

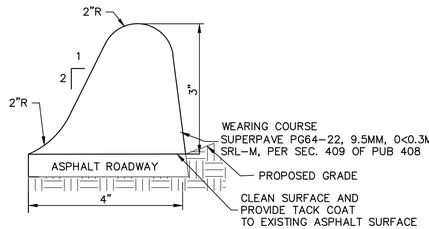

ASPHALT ROLLED CURB DETAIL

NOT TO SCALE

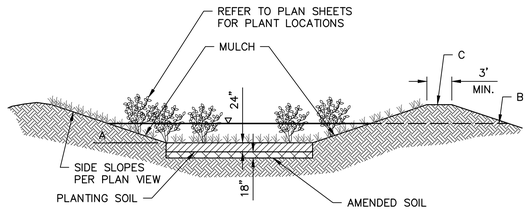

RAIN GARDEN	BOTTOM EL. A	SPILLWAY. EL. B	TOP OF BERM EL. C
1	562	564.75	565
3	413	414.5	415

NOTE:
1. PLANTING SOIL SHALL HAVE A SANDY LOAM, LOAMY SAND OR LOAM TEXTURE PER USDA TEXTURAL TRIANGLE. MAXIMUM CLAY CONTENT <5%; SOIL MIXTURE SHALL BE 50% TOPSOIL, 25% SAND AND 25% COMPOST (MEETING U.S. COMPOSTING COUNCIL SEAL OF TESTING ASSURANCE (STA) PROGRAM OR APPROVED EQUAL).
2. AMENDED SOIL MIXTURE SHALL BE AS FOLLOWS:
   30% SAND
   30% COMPOST/ORGANIC MATTER
   40% TOPSOIL
3. AMENDED SOIL TOPSOIL SHALL HAVE A MAXIMUM OF 25 PERCENT FINES CONSISTING OF CLAY AND SILT PARTICLES WITH THE CLAY CONTENT NOT EXCEEDING 10 PERCENT. PLACEMENT OF MATERIALS WITH INCREASED FINES WILL SUBSTANTIALLY DECREASE INFILTRATION AND INCREASE THE RISK OF NO INFILTRATION. ALL PROPOSED TOPSOIL/PERMEABLE MATERIALS SHOULD BE ANALYZED FOR GRADATION, ORGANIC CONTENT, PH AND APPROPRIATE NUTRIENT LEVELS AS REQUIRED BASED ON THE PLANTING REQUIREMENTS. A MINIMUM OF 1 TEST SHOULD BE PERFORMED FOR EACH PROPOSED IMPORT SOURCE OR EACH ON-SITE MIXTURE. IT SHOULD BE NOTED THAT THE LABORATORY TESTING TIME IS TYPICALLY 2 WEEKS. ACCORDINGLY, TESTING OF THE MATERIAL SHOULD BE PERFORMED EARLY DURING GRADING ACTIVITIES, AND THE PROJECT SCHEDULE SHOULD ACCOUNT FOR THE TIME TO COMPLETE THE TESTING. UPON COMPLETION OF THE LABORATORY TESTING, GEOTECHNICAL ENGINEER CAN PROVIDE RECOMMENDATIONS FOR MIXING PROPORTIONS OF SAND, COMPOST, LIME AND OTHER NECESSARY FERTILIZERS AS REQUIRED TO OBTAIN A SUITABLE PLANTING SOIL MIXTURE.

RAIN GARDEN DETAIL

NOT TO SCALE

LIMITATIONS OF SOILS PERTAINING TO EARTHMOVING PROJECTS

MAP SYMBOL	MAP UNIT NAME	CUTBANKS CAVE	CORROSIVE TO CONCRETE OR STEEL	FLOODING	DEPTH TO SATURATED ZONE / SEASONAL HIGH WATER TABLE	HYDRIC / HYDRIC INCLUSIONS	LOW STRENGTH / LANDSLIDE PRONE	PIPING	POOR SOURCE OF TOPSOIL	FROST ACTION	SHRINK SWELL	PONDING	WETNESS	DEPTH TO HARD BEDROCK	SLOPE
PeB2	PENN CHANNERY SILT LOAM, 3 TO 8 PERCENT SLOPES	X	C/S	·	X	·	·	X	·	X	·	X	X	X	·
PeC2	PENN CHANNERY SILT LOAM, 8 TO 15 PERCENT SLOPES	X	C/S	·	X	·	·	X	·	X	·	X	X	·	X
RdB2	REDINGTON SILT LOAM, 8 TO 15 PERCENT SLOPES	X	C/S	·	X	·	X	·	·	X	·	-	X	·	X
Bc	BASHER SILT LOAM	X	C/S	X	X	·	X	X	·	·	X	-	X	·	·
Cr	CROTON SILT LOAM, OCCASIONALLY PONDED, 0 TO 3 PERCENT SLOPES	X	C/S	X	X	X	X	X	X	X	·	X	·	X	·
LeB2	BRINKERTON AND ARMARGH SILT LOAMS, 0 TO 3 PERCENT SLOPES	X	C/S	·	X	·	X	X	·	X	·	·	X	X	·

RESOLUTION TO SOILS LIMITATIONS

SOIL LIMITATION RESOLUTIONS	
LIMITATION	RESOLUTION
CUTBANKS CAVE	CONDUCT TRENCHING OPERATIONS IN ACCORDANCE WITH OSHA TECHNICAL MANUAL FOR TRENCHING. STABILIZE BANKS IMMEDIATELY WITH SEED, MULCH, EROSION CONTROL MATS, BONDED FIBER MATRIX, OR A COMBINATION OF THESE AND/OR OTHER METHODS.
CORROSIVE TO CONCRETE OR STEEL	PROTECT CONCRETE AND STEEL WITH PROTECTIVE COATINGS, SELECT ALTERNATIVE MATERIALS IN LIEU OF CONCRETE OR STEEL, OR A COMBINATION OF THESE AND OR OTHER METHODS.
DEPTH TO SATURATED ZONE \ SEASONAL HIGH WATER TABLE \ WETNESS \ FLOODING \ PONDING \ HYDRIC SOILS	SELECT VEGETATIVE SPECIES TOLERANT TO WET CONDITIONS, TILE VEGETATED AREAS, OR IMPLEMENT COMBINATIONS OF THESE AND/OR OTHER METHODS. UTILIZE PUMPED WATER FILTER BAGS TO DEWATER DISTURBED AREAS DURING CONSTRUCTION.
LOW STRENGTH \ LANDSLIDE PRONE	LOCATE ROADWAYS TO OTHER SOIL TYPES, IMPORT OTHER SOILS FOR ROADWAY CONSTRUCTION, OR IMPLEMENT A COMBINATION OF THESE AND/OR OTHER METHODS. FOR CUT/FILL SLOPES, REDUCE SLOPE, INSTALL EROSION CONTROL MATTING, OR IMPLEMENT A COMBINATION OF THESE AND/OR OTHER METHODS.
PIPING	IMPORT OTHER SOIL FOR EMBANKMENTS OF SEDIMENT BASINS, SEDIMENT TRAPS, STORM WATER RETENTION BASINS AND STORM WATER DETENTION BASINS, LOCATE THOSE FACILITIES ON OTHER SOIL TYPES, LIMIT EMBANKMENT SLOPE STEEPNESS, OR IMPLEMENT COMBINATIONS OF THESE AND/OR OTHER METHODS.
POOR SOURCE OF TOPSOIL	IDENTIFY AND RESOLVE CHARACTERISTICS THAT RENDER THE SOIL TYPES POORLY SUITED AS TOPSOIL. PERFORM SOIL TESTS TO DETERMINE THE REQUIRED SOIL AMENDMENTS AND APPLICATION RATES. IDENTIFY SOILS ON-SITE THAT ARE ADEQUATE SOURCES OF TOPSOIL AND STOCKPILE THESE FOR USE DURING RESTORATION.
FROST ACTION	IMPORT OTHER SOIL FOR EMBANKMENTS OF SEDIMENT BASINS, SEDIMENT TRAPS, STORM WATER RETENTION BASINS AND STORM WATER DETENTION BASINS, LOCATE THOSE FACILITIES ON OTHER SOIL TYPES, DO NOT CONSTRUCT EMBANKMENTS DURING PERIODS PRONE TO FROST, OR IMPLEMENT COMBINATIONS OF THESE AND/OR OTHER METHODS.
SHRINK-SWELL	LOCATE FACILITIES THAT MAY BE SUSCEPTIBLE TO DAMAGE FROM SHRINK OR SWELLING TO ANOTHER SOIL TYPE, IMPORT OTHER SOILS FOR THESE FACILITIES, OR IMPLEMENT COMBINATION OF THESE AND/OR OTHER METHODS.
DEPTH TO HARD BEDROCK	IF HARD BEDROCK IS ENCOUNTERED AND UNABLE TO BE EXCAVATED; CONTRACTOR IS TO CONTACT ENGINEER FOR GUIDANCE.

NO.	REVISION	DATE	BY
1	ADDENDUM NO. 1	9/23/22	RSF

COMMONWEALTH OF PENNSYLVANIA — REGISTERED PROFESSIONAL — MATTHEW DAVID CICHY — ENGINEER PE074220

HRG
Herbert, Rowland & Grubic, Inc.
Engineering & Related Services
AN EMPLOYEE-OWNED COMPANY
369 East Park Drive
Harrisburg, PA 17111
(717) 564-1121
Fax (717) 564-1158
hrg@hrg-inc.com
www.hrg-inc.com

HALIFAX AREA
WATER AND SEWER AUTHORITY
203 ARMSTRONG STREET
HALIFAX, PA 17032
(717) 896-8083

MISCELLANEOUS CONSTRUCTION DETAILS
FOR
HALIFAX TWP. SANITARY SEWER EXTENSION PROJECT
HALIFAX TOWNSHIP DAUPHIN COUNTY PENNSYLVANIA

PROJ. MGR. – JJM
DESIGN– MDC
CADD– BAB
CHECKED–MDC
SCALE– AS NOTED
DATE– AUG. 2022

DRAWING NO.
DT-8
SHEET NO.
69 OF 109
PROJECT 001650.0428

File name: P:\001650\001650.0428\CSD\Plan Sets\ADA\W001650428-DT.dwg Layout: 8 Sep 23, 2022 - 8:57am ahecht

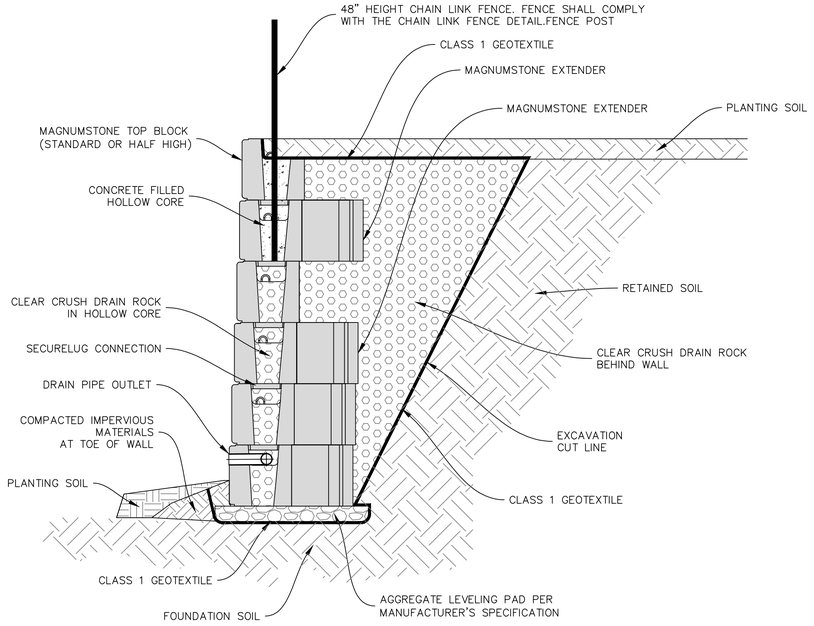

GRAVITY WALL WITH EXTENDERS AND PROTECTIVE FENCE
NOT TO SCALE

NOTES:
1. THE RETAINING WALL SHALL BE MAGNUMSTONE AS MANUFACTURED BY YORK BUILDING PRODUCTS, OR EQUAL.
2. THE CONTRACTOR SHALL PROVIDE STRUCTURAL DESIGN CALCULATIONS FOR THE RETAINING WALL, SEALED BY A REGISTERED PROFESSIONAL ENGINEER IN THE STATE OF PENNSYLVANIA, FOR THE DESIGN ENGINEERS REVIEW AND APPROVAL.
3. PROVIDE END UNIT BLOCKS AT THE EXPOSED ENDS OF THE RETAINING WALL.
4. DETAILS ARE BASED ON MAGNUMSTONE RETAINING WALL. INSTALL RETAINING WALL IN ACCORDANCE WITH MANUFACTURER'S AND DELEGATED DESIGN ENGINEER'S SPECIFIC DETAILS AND REQUIREMENTS.

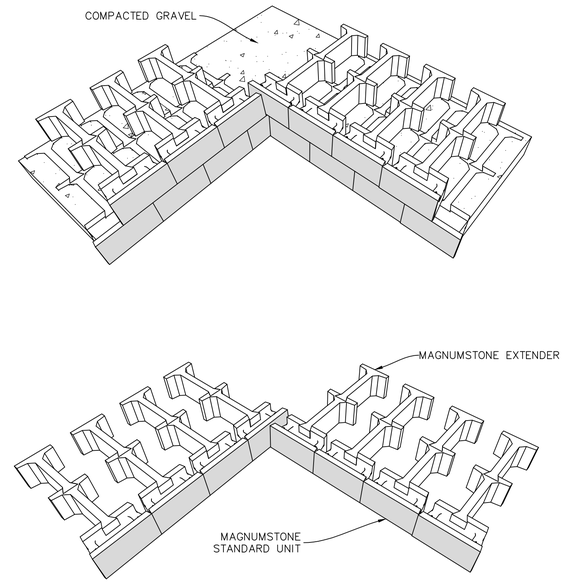

INSIDE CORNER
NOT TO SCALE

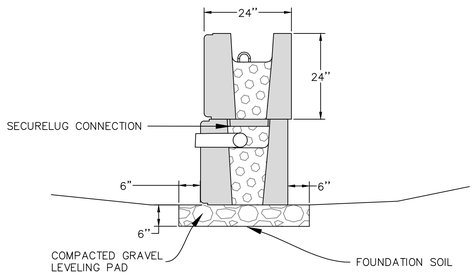

LEVELING PAD
NOT TO SCALE

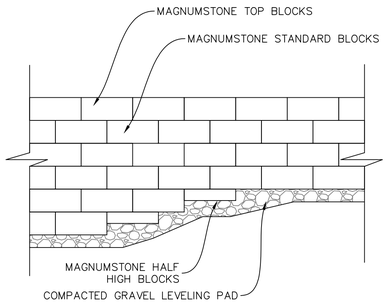

BASE STEP UP
NOT TO SCALE

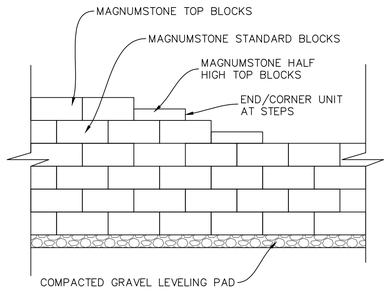

TOP OF WALL STEP UP
NOT TO SCALE

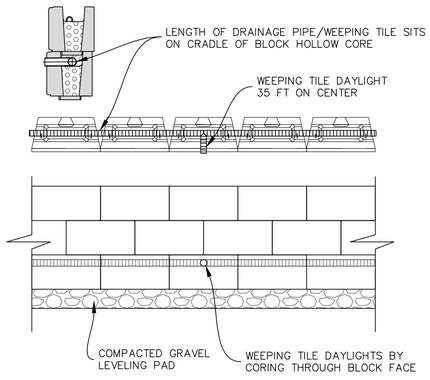

DRAINAGE PIPE LAYOUT
NOT TO SCALE

NO.	REVISION	DATE	BY

COMMONWEALTH OF PENNSYLVANIA
REGISTERED PROFESSIONAL
MATTHEW DAVID CICHY
ENGINEER
PE074220

HRG
Herbert, Rowland & Grubic, Inc.
Engineering & Related Services
AN EMPLOYEE-OWNED COMPANY
369 East Park Drive
Harrisburg, PA 17111
(717) 564-1121
Fax (717) 564-1158
hrg@hrg-inc.com
www.hrg-inc.com

HALIFAX AREA
WATER AND SEWER AUTHORITY
203 ARMSTRONG STREET
HALIFAX, PA 17032
(717) 896-8083

RETAINING WALL DETAILS
FOR
HALIFAX TWP. SANITARY SEWER EXTENSION PROJECT
HALIFAX TOWNSHIP DAUPHIN COUNTY PENNSYLVANIA

PROJ. MGR. – JJM	
DESIGN– MDC	
CADD– RSF	
CHECKED–MDC	
SCALE– AS NOTED	
DATE– AUG. 2022	

DRAWING NO.
DT-9
SHEET NO.
70 OF 109
PROJECT 001650.0428

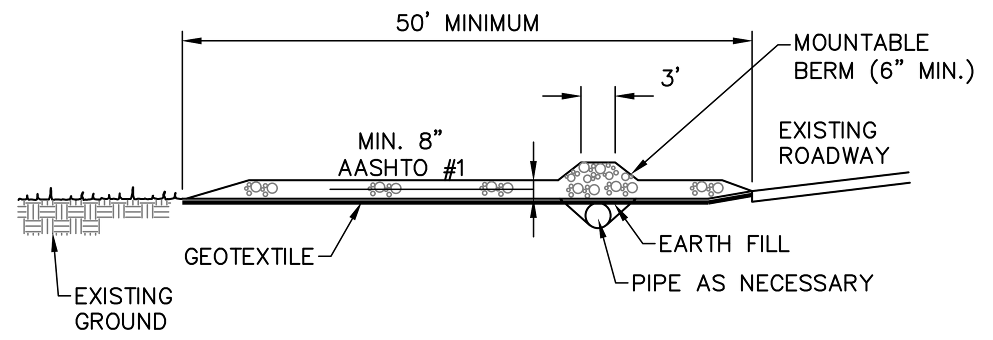

PROFILE

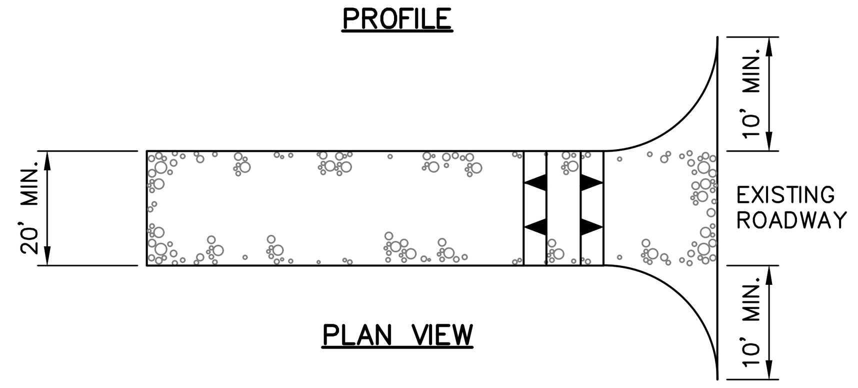

PLAN VIEW

NOTES:

1. REMOVE TOPSOIL PRIOR TO INSTALLATION OF ROCK CONSTRUCTION ENTRANCE. EXTEND ROCK OVER FULL WIDTH OF ENTRANCE.

2. RUNOFF SHALL BE DIVERTED FROM ROADWAY TO A SUITABLE SEDIMENT REMOVAL BMP PRIOR TO ENTERING ROCK CONSTRUCTION ENTRANCE.

3. MOUNTABLE BERM SHALL BE INSTALLED WHEREVER OPTIONAL CULVERT PIPE IS USED AND PROPER PIPE COVER AS SPECIFIED BY THE MANUFACTURER IS NOT OTHERWISE PROVIDED. PIPE SHALL BE SIZED APPROPRIATELY FOR SIZE OF DITCH BEING CROSSED.

4. MAINTENANCE: ROCK CONSTRUCTION ENTRANCE THICKNESS SHALL BE CONSTANTLY MAINTAINED TO THE SPECIFIED DIMENSIONS BY ADDING ROCK. A STOCKPILE SHALL BE MAINTAINED ON SITE FOR THIS PURPOSE. ALL SEDIMENT DEPOSITED ON PAVED ROADWAYS SHALL BE REMOVED AND RETURNED TO THE CONSTRUCTION SITE IMMEDIATELY. IF EXCESSIVE AMOUNTS OF SEDIMENT ARE BEING DEPOSITED ON ROADWAY, EXTEND LENGTH OF ROCK CONSTRUCTION ENTRANCE BY 50' INCREMENTS UNTIL CONDITION IS ALLEVIATED OR INSTALL A WASH RACK. WASHING THE ROADWAY OR SWEEPING THE DEPOSITS INTO ROADWAY DITCHES, SEWERS, CULVERTS, OR OTHER DRAINAGE COURSES IS NOT ACCEPTABLE.

ROCK CONSTRUCTION ENTRANCE DETAIL

NOT TO SCALE

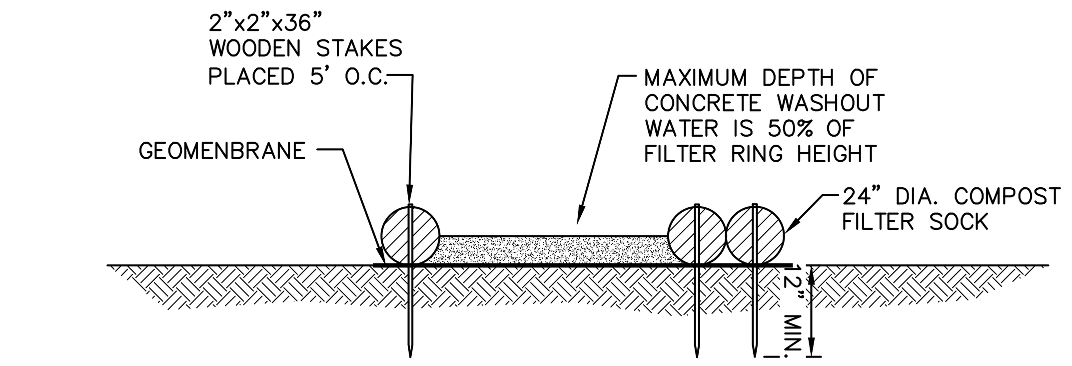

SECTION A–A

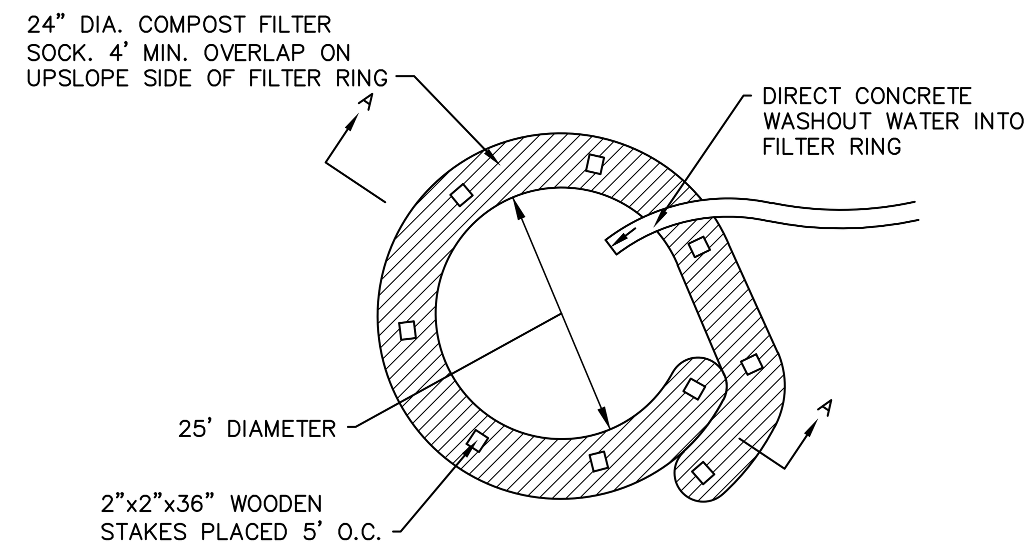

PLAN VIEW

NOTES:
1. PROVIDE PROPER SIGNAGE FOR CONCRETE DELIVERY VEHICLE DRIVERS SO THAT THEY ARE AWARE OF THE PRESENCE OF WASHOUT FACILITIES.
2. WASHOUT FACILITIES SHOULD NOT BE PLACED WITHIN 50' OF STORM DRAINS, OPEN DITCHES, OR SURFACE WATERS. UNDER NO CIRCUMSTANCES SHOULD WASH WATER BE ALLOWED TO ENTER ANY SURFACE WATERS.
3. WHEREVER POSSIBLE, CONCRETE WASHOUTS SHOULD BE LOCATED ON SLOPES NOT EXCEEDING A 2% GRADE.
4. A SUITABLE IMPERVIOUS GEOMEMBRANE SHOULD BE PLACED AT THE LOCATION OF THE WASHOUT. COMPOST SOCKS SHOULD BE STAKED IN THE MANNER RECOMMENDED BY THE MANUFACTURER AROUND PERIMETER OF THE GEOMEMBRANE SO AS TO FORM A RING WITHIN THE ENDS OF THE SOCK LOCATED AT THE UPSLOPE CORNER. CARE MUST BE TAKEN TO ENSURE CONTINUOUS CONTACT OF THE SOCK WITH THE GEOMEMBRANE AT ALL LOCATIONS. WHERE NECESSARY, 18" SOCKS MAY BE STACKED ONTO 24" SOCKS AND STAKED SO AS TO FORM A TRIANGULAR CROSS SECTION.

CONCRETE WASHOUT AREA DETAIL

NOT TO SCALE

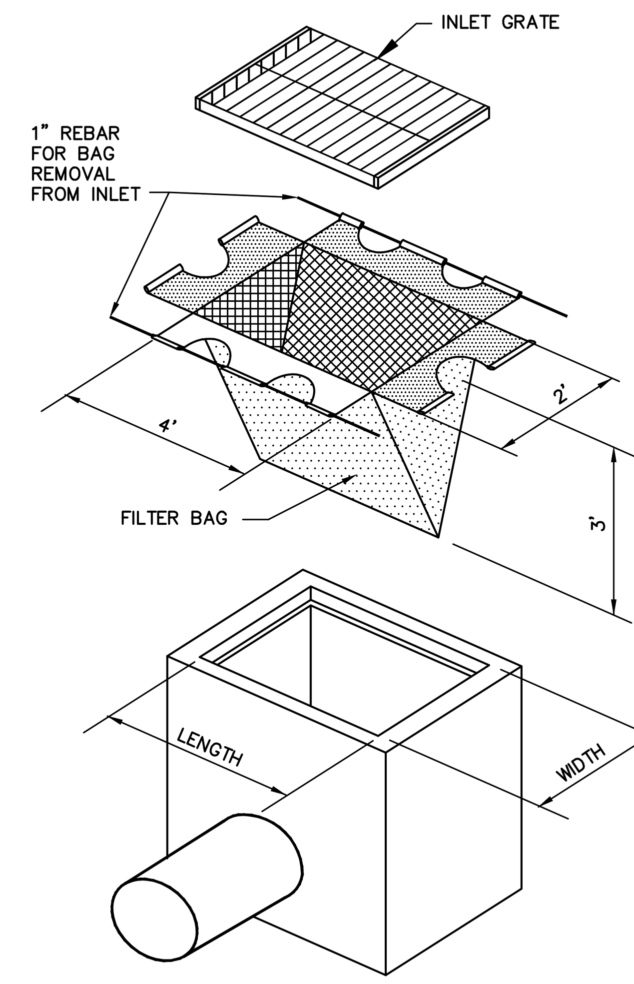

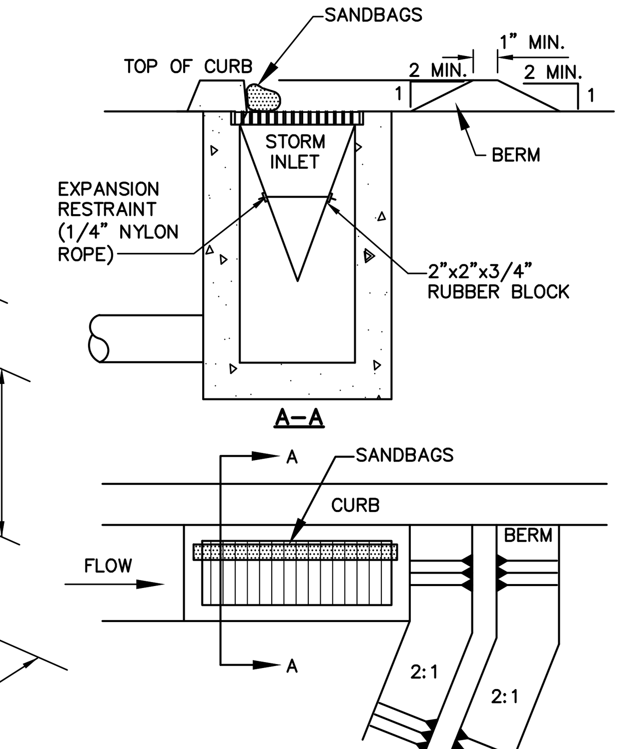

NOTES:
1. MAXIMUM DRAINAGE AREA=1/2 ACRE.
2. INLET PROTECTION IS NOT REQUIRED FOR INLET TRIBUTARY TO SEDIMENT BASIN OR TRAP. BERMS REQUIRED FOR ALL INSTALLATIONS.
3. EARTHEN BERM SHALL BE MAINTAINED UNTIL ROADWAY IS STONED. ROAD SUBBASE BERM SHALL BE MAINTAINED UNTIL ROADWAY IS PAVED.
4. 6" MINIMUM HEIGHT ASPHALT BERM SHALL BE MAINTAINED UNTIL ROADWAY SURFACE RECEIVES FINAL COAT.
5. AT A MINIMUM, THE FABRIC SHALL HAVE A MINIMUM GRAB TENSILE STRENGTH OF 120 LBS., A MINIMUM BURST STRENGTH OF 200 PSI, AND A MINIMUM TRAPEZOIDAL TEAR STRENGTH OF 50 LBS. FILTER BAGS SHALL BE CAPABLE OF TRAPPING ALL PARTICLES NOT PASSING A NO. 40 SIEVE.
6. INLET FILTER BAGS SHALL BE INSPECTED ON A WEEKLY BASIS AND AFTER EACH RUNOFF EVENT. BAGS SHALL BE EMPTIED AND RINSED OR REPLACED WHEN 1/2 FULL OR WHEN FLOW CAPACITY HAS BEEN REDUCED SO AS TO CAUSE FLOODING BYPASSING OF THE INLET. DAMAGED OR CLOGGED BAGS SHALL BE REPLACED. A SUPPLY SHALL BE MAINTAINED ON SITE FOR REPLACEMENT BAGS. ALL NEEDED REPAIRS SHALL BE INITIATED IMMEDIATELY AFTER THE INSPECTION. DISPOSE ACCUMULATED SEDIMENT AS WELL AS ALL USED BAGS ACCORDING TO THE PLAN NOTES.
7. DO NOT USE ON MAJOR PAVED ROADWAYS WHERE PONDING MAY CAUSE TRAFFIC HAZARDS.

CONTRACTOR IS TO ENSURE INLET PROTECTION IS FUNCTIONING PROPERLY AND NO PONDING ON THE ROADWAY IS OCCURRING. INLET PROTECTION IS TO BE REMOVED IMMEDIATELY ONCE THE TRIBUTARY AREA IS STABILIZED.

FILTER BAG INLET PROTECTION FOR TYPE C INLET

NOT TO SCALE

SEEDING SCHEDULE

APPLICATION	SPECIES	%PURE LIVE SEED	APPLICATION RATE	FERTILIZER	LINING RATE	SEEDING DATE
TEMPORARY (PENNDOT FORMULA E	ANNUAL RYE	88.2%	10 LBS./1000 SY	5–5–5 AT 207 LBS./ 1000 SY	413 LBS./ 1000 SY	3/15 TO 10/15
PERMANENT (PENNDOT FORMULA B)	PERENNIAL RYEGRASS MIX (LOLIUM PERENNE)* KENTUCKY BLUE GRASS MIX (POA PRATENIS)** CREEPING RED FESCUE OR CHEWING FESCUE	88.2% 78.4% 83.3%	4 LBS./1000 SY 11 LBS./1000 SY 6 LBS./1000 SY	SEE NOTE 1 BELOW	800LBS./ 1000 SY	3/15 TO 6/1 AND 9/1 TO 10/15
PERMANENT (PENNDOT FORMULA L)	HARD FESCUE FESTUCA LONGIFOLIA)*** CREEPING RED FESCUE ANNUAL RYEGRASS (LOLIUM MULTIFORUM)	83.3% 83.3% 88.2%	13 LBS./1000 SY 8.5 LBS./1000 SY 2.5 LBS./1000 SY	SEE NOTE 1 BELOW	800LBS./ 1000 SY	3/15 TO 6/1 AND 9/1 TO 10/15

1. FERTILIZER SHALL BE APPLIED IN ACCORDANCE WITH A SOIL TEST. IN THE ABSENCE OF A SOIL TEST, FERTILIZER SHALL BE APPLIED AS FOLLOWS:
   A. 10–20–20 ANALYSIS COMMERCIAL FERTILIZER AT 140 LBS./1000 S.Y.
   AND
   38–0–0 UREA FORM FERTILIZER AT 50 LBS./1000 S.Y.
   OR
   B. 32–0–0 TO 38–0–0 SULFUR COATED UREA FERTILIZER AT 59–50 LBS./1000 S.Y.
   OR
   C. 31–0–0 IBDU FERTILIZER AT 61 LBS./1000 S.Y.
2. SPECIFICATION ITEMS OBTAINED USING PENNDOT PUBLICATION NO. 408.
3. ALL SEEDED AREAS SHALL BE MULCHED WITH HAY OR STRAW APPLIED AT A RATE OF 6000 LBS./AC. (1240 LBS./1000 S.Y.), MULCH TO BE ANCHORED WITH WOOD CELLULOSE FIBER AT 750 LBS./AC. OR EQUAL.
4. ALL AREAS RECEIVING SEEDING SHALL HAVE A MINIMUM OF 6" OF ORGANIC TOPSOIL.

* PERENNIAL RYEGRASS: A COMBINATION OF IMPROVED CERTIFIED VARIETIES WITH NO ONE VARIETY EXCEEDING 50% OF THE TOTAL RYEGRASS COMPONENT.
** KENTUCKY BLUEGRASS: A COMBINATION OF IMPROVED CERTIFIED VARIETIES WITH NO ONE VARIETY EXCEEDING 25% OF THE TOTAL BLUEGRASS COMPONENT.

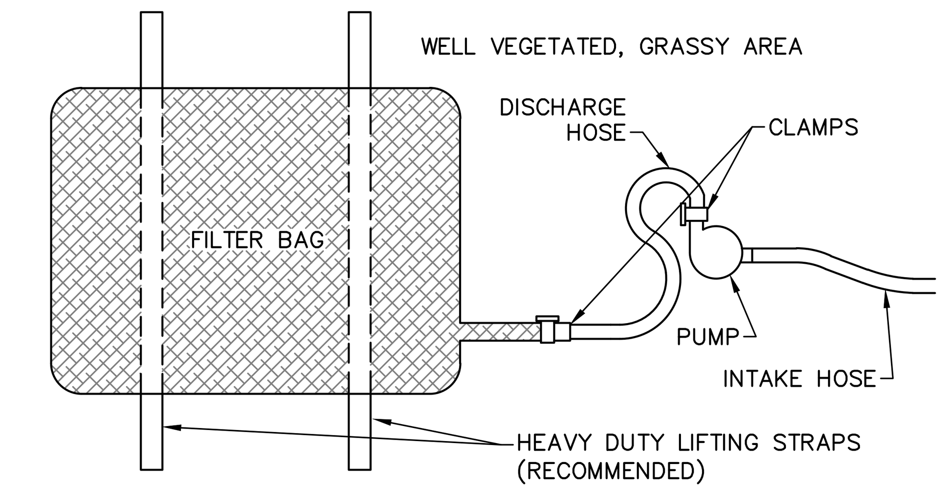

PLAN VIEW

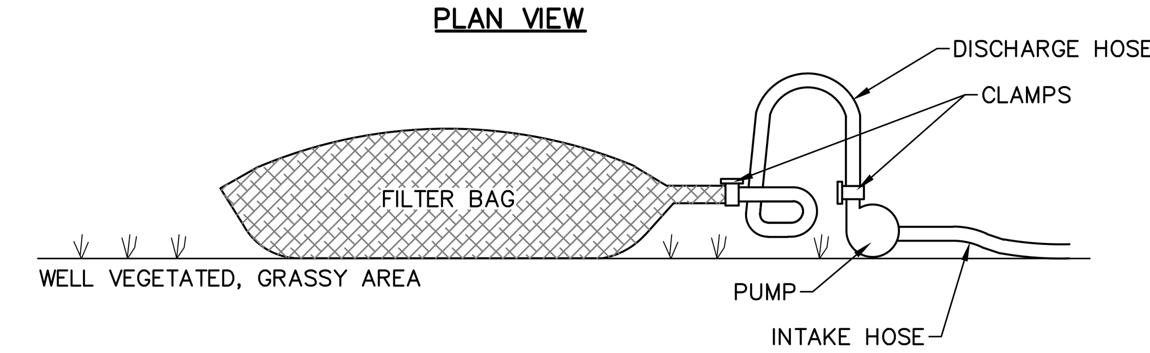

ELEVATION VIEW

NOTES:

1. LOW VOLUME FILTER BAGS SHALL BE MADE FROM NON–WOVEN GEOTEXTILE MATERIAL SEWN WITH HIGH STRENGTH, DOUBLE STITCHED "J" TYPE SEAMS. THEY SHALL BE CAPABLE OF TRAPPING PARTICLES LARGER THAN 150 MICRONS. HIGH VOLUME FILTER BAGS SHALL BE MADE FROM WOVEN GEOTEXTILES THAT MEET THE FOLLOWING STANDARDS:

PROPERTY	TEST METHOD	MINIMUM STANDARD
AVG. WIDE WIDTH STRENGTH	ASTM D–4884	60 LB/IN
GRAB TENSILE	ASTM D–4632	205 LB
PUNCTURE	ASTM D–4833	110 LB
MULLEN BURST	ASTM D–3786	350 PSI
UV RESISTANCE	ASTM D–4355	70%
AOS % RETAINED	ASTM D–4751	80 SIEVE

2. A SUITABLE MEANS OF ACCESSING THE BAG WITH MACHINERY REQUIRED FOR DISPOSAL PURPOSES SHALL BE PROVIDED. FILTER BAGS SHALL BE REPLACED WHEN THEY BECOME 1/2 FULL OF SEDIMENT. SPARE BAGS SHALL BE KEPT AVAILABLE FOR REPLACEMENT OF THOSE THAT HAVE FAILED OR ARE FILLED. BAGS SHALL BE PLACED ON STRAPS TO FACILITATE REMOVAL UNLESS BAGS COME WITH LIFTING STRAPS ALREADY ATTACHED.

3. BAGS SHALL BE LOCATED IN WELL–VEGETATED (GRASSY) AREA, AND DISCHARGE ONTO STABLE, EROSION RESISTANT AREAS. WHERE THIS IS NOT POSSIBLE, A GEOTEXTILE UNDERLAYMENT AND FLOW PATH SHALL BE PROVIDED. BAGS MAY BE PLACED ON FILTER STONE TO INCREASE DISCHARGE CAPACITY. BAGS SHALL NOT BE PLACED ON SLOPES GREATER THAN 5%. FOR SLOPES EXCEEDING 5%, CLEAN ROCK OR OTHER NON–ERODIBLE AND NON–POLLUTING MATERIAL MAY BE PLACED UNDER THE BAG TO REDUCE SLOPE STEEPNESS.

4. NO DOWNSLOPE SEDIMENT BARRIER IS REQUIRED FOR MOST INSTALLATIONS. COMPOST BERM OR COMPOST FILTER SOCK SHALL BE INSTALLED BELOW BAGS LOCATED IN HQ OR EV WATERSHEDS, WITHIN 50 FEET OF ANY RECEIVING SURFACE WATER OR WHERE GRASSY AREA IS NOT AVAILABLE.

5. THE PUMP DISCHARGE HOSE SHALL BE INSERTED INTO THE BAGS IN THE MANNER SPECIFIED BY THE MANUFACTURER AND SECURELY CLAMPED. A PIECE OF PVC PIPE IS RECOMMENDED FOR THIS PURPOSE.

6. THE PUMPING RATE SHALL BE NO GREATER THAN 750 GPM OR 1/2 THE MAXIMUM SPECIFIED BY THE MANUFACTURER, WHICHEVER IS LESS. PUMP INTAKES SHALL BE FLOATING AND SCREENED.

7. FILTER BAGS SHALL BE INSPECTED DAILY. IF ANY PROBLEM IS DETECTED, PUMPING SHALL CEASE IMMEDIATELY AND NOT RESUME UNTIL THE PROBLEM IS CORRECTED.

PUMPED WATER FILTER BAG DETAIL

NOT TO SCALE

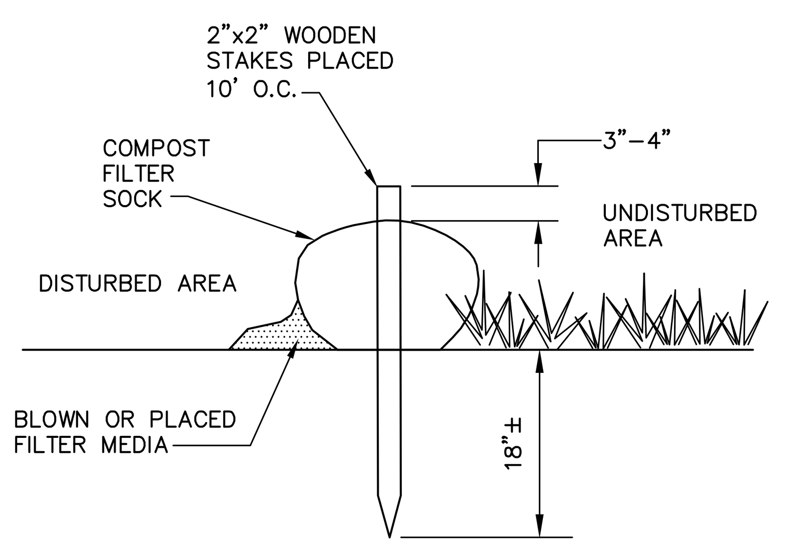

SECTION

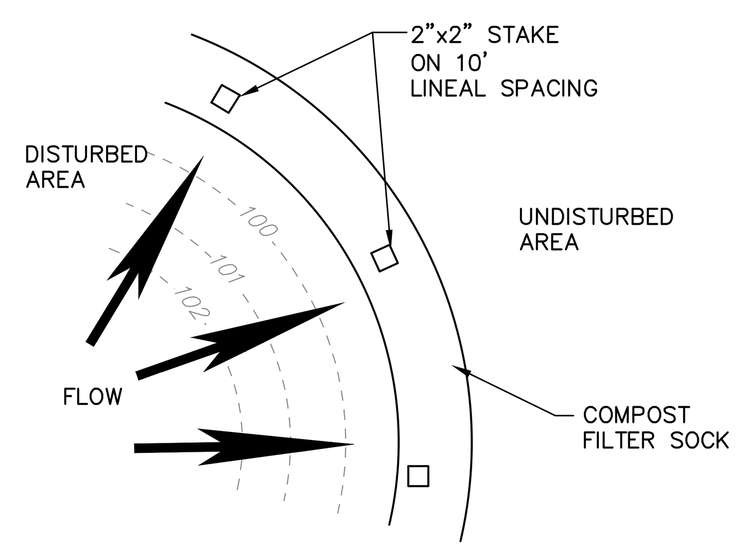

PLAN VIEW

NOTES:
1. ALL MATERIAL TO MEET PADEP SPECIFICATIONS.
2. COMPOST FILTER SOCK SHALL BE PLACED AT EXISTING LEVEL GRADE. BOTH ENDS OF THE SOCK SHALL BE EXTENDED AT LEAST 8' UP SLOPE AT 45° TO THE MAIN SOCK ALIGNMENT. MAXIMUM SLOPE LENGTH ABOVE ANY SOCK SHALL NOT EXCEED PADEP SPECIFICATIONS.
3. TRAFFIC SHALL NOT BE PERMITTED TO CROSS FILTER SOCKS.
4. ACCUMULATED SEDIMENT SHALL BE REMOVED WHEN IT REACHES 1/2 THE ABOVE GROUND HEIGHT OF THE SOCK AND PROPERLY DISPOSED.
5. SOCKS SHALL BE INSPECTED WEEKLY AND AFTER EACH RUNOFF EVENT. DAMAGED SOCKS SHALL BE REPAIRED ACCORDING TO MANUFACTURER'S SPECIFICATIONS OR REPLACED WITHIN 24 HOURS OF INSPECTION.
6. BIODEGRADABLE FILTER SOCKS SHALL BE REPLACED AFTER 6 MONTHS; PHOTODEGRADABLE SOCKS AFTER 1 YEAR. POLYPROPYLENE SOCKS SHALL BE REPLACED ACCORDING TO MANUFACTURER'S RECOMMENDATIONS.
7. UPON STABILIZATION OF THE AREA TRIBUTARY TO THE SOCK, STAKES SHALL BE REMOVED. THE SOCK MAY BE LEFT IN PLACE AND VEGETATED OR REMOVED. IN THE LATTER CASE, THE MESH SHALL BE CUT OPEN AND THE MULCH SPREAD AS A SOIL SUPPLEMENT.

COMPOST FILTER SOCK (12") DETAIL

NOT TO SCALE

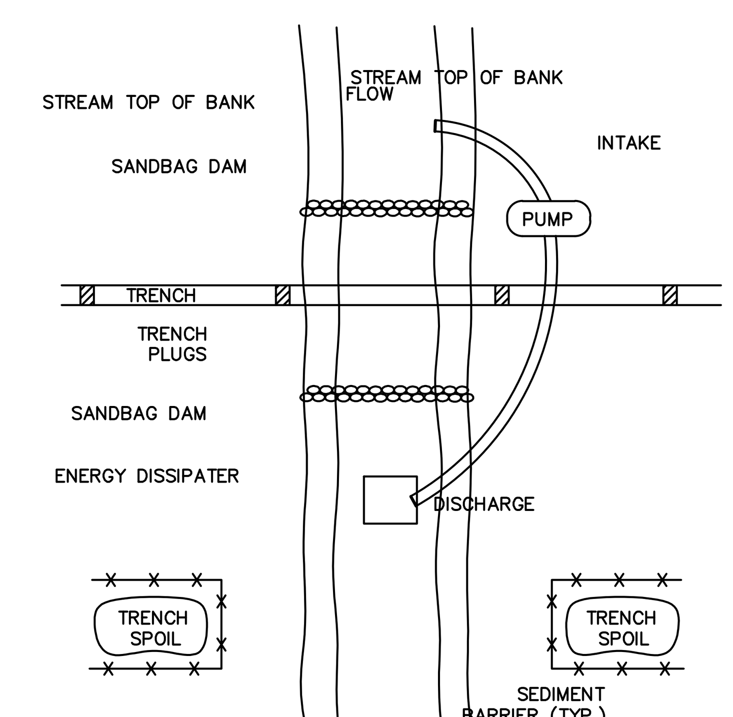

NOTES:

GRUBBING SHALL NOT TAKE PLACE WITHIN 50 FEET OF TOP–OF–BANK UNTIL ALL MATERIALS REQUIRED TO COMPLETE CROSSING ARE ON SITE AND PIPE IS READY FOR INSTALLATION.

BYPASS PUMP INTAKE SHALL BE MAINTAINED A SUFFICIENT DISTANCE FROM THE BOTTOM TO PREVENT PUMPING OF CHANNEL BOTTOM MATERIALS.

TRENCH PLUGS SHALL BE INSTALLED WITHIN THE TRENCH ON BOTH SIDES OF THE STREAM CHANNEL (STANDARD CONSTRUCTION DETAIL #13–4).

WATER ACCUMULATING WITHIN THE WORK AREA SHALL BE PUMPED TO A PUMPED WATER FILTER BAG OR SEDIMENT TRAP PRIOR TO DISCHARGING INTO ANY SURFACE WATER.

HAZARDOUS OR POLLUTANT MATERIAL STORAGE AREAS SHALL BE LOCATED AT LEAST 100 FEET BACK FROM THE TOP OF STREAMBANK.

ALL EXCESS EXCAVATED MATERIAL SHALL BE IMMEDIATELY REMOVED FROM THE STREAM CROSSING AREA.

ALL DISTURBED AREAS WITHIN 50 FEET OF TOP–OF–BANK SHALL BE BLANKETED OR MATTED WITHIN 24 HOURS OF INITIAL DISTURBANCE FOR MINOR STREAMS OR 48 HOURS OF INITIAL DISTURBANCE FOR MAJOR STREAMS UNLESS OTHERWISE AUTHORIZED.

APPROPRIATE STREAMBANK PROTECTION SHALL BE PROVIDED WITHIN THE CHANNEL.

STANDARD CONSTRUCTION DETAIL #13-2
TYPICAL UTILITY LINE STREAM CROSSING WITH PUMP BYPASS

NOT TO SCALE

NO.	REVISION	DATE	BY

COMMONWEALTH OF PENNSYLVANIA REGISTERED PROFESSIONAL MATTHEW J. VANASKIE ENGINEER PE077051

HRG
Herbert, Rowland & Grubic, Inc.
Engineering & Related Services
AN EMPLOYEE-OWNED COMPANY
369 East Park Drive
Harrisburg, PA 17111
(717) 564-1121
Fax (717) 564-1158
hrg@hrg-inc.com
www.hrg-inc.com

HALIFAX AREA
WATER AND SEWER AUTHORITY
203 ARMSTRONG STREET
HALIFAX, PA 17032
(717) 896-8083

EROSION AND SEDIMENTATION POLLUTION CONTROL DETAILS FOR HALIFAX TWP. SANITARY SEWER EXTENSION PROJECT

HALIFAX TOWNSHIP DAUPHIN COUNTY PENNSYLVANIA

PROJ. MGR. – JJM
DESIGN– MJW
CADD– MJW
CHECKED–MJV
SCALE– AS NOTED
DATE– AUG. 2022

DRAWING NO. DT-10

PROJECT 001650.0428

File name: P:\0016\001650_0428\C3D\Plan Sets\SAN\W0016500428-DT.dwg Layout:ES1 Sep 01, 2022–5:37pm sfocht

LIMITATIONS OF SOILS PERTAINING TO EARTHMOVING PROJECTS

MAP SYMBOL	MAP UNIT NAME	CUTBANKS CAVE	CORROSIVE TO CONCRETE OR STEEL	FLOODING	DEPTH TO SATURATED ZONE / SEASONAL HIGH WATER TABLE	HYDRIC / HYDRIC INCLUSIONS	LOW STRENGTH / LANDSLIDE PRONE	PIPING	POOR SOURCE OF TOPSOIL	FROST ACTION	SHRINK SWELL	PONDING	WETNESS	DEPTH TO HARD BEDROCK	SLOPE
AbB2	ALBRIGHTS SILT LOAM, 3 TO 10 PERCENT SLOPES	X	C/S	·	X	X	X	X	X	X	·	·	X	·	X
At	ATKINS SILT LOAM	X	C/S	X	X	X	X	X	X	X	·	·	X	X	·
Bc	BASHER SILT LOAM	X	C/S	X	X	X	X	X	X	X	·	·	X	X	·
CkC2	CALVIN–KLINESVILLE SHALY SILT LOAMS, 8 TO 15 PERCENT SLOPES, MODERATELY ERODED	X	C/S	X	·	X	·	X	X	X	-	-	-	·	·
CkD2	CALVIN–KLINESVILLE SHALY SILT LOAMS, 15 TO 25 PERCENT SLOPES, MODERATELY ERODED	X	C/S	X	·	X	·	X	X	X	-	-	-	·	·
ClA	CALVIN–LECK KILL SHALY SILT LOAMS, 0 TO 3 PERCENT SLOPES	X	C/S	X	·	X	·	X	X	X	-	-	-	·	·
ClB2	CALVIN–LECK KILL SHALY SILT LOAMS, 3 TO 8 PERCENT SLOPES, MODERATELY ERODED	X	C/S	X	·	X	·	X	X	X	-	-	-	·	·
ClC2	CALVIN–LECK KILL SHALY SILT LOAMS, 8 TO 15 PERCENT SLOPES, MODERATELY ERODED	X	C/S	X	·	X	·	X	X	X	-	-	-	·	·
DcB2	DEKALB CHANNERY SANDY LOAM, 3 TO 8 PERCENT SLOPES, MODERATELY ERODED	X	C/S	·	·	·	X	X	X	X	·	·	·	X	·
DcC2	DEKALB CHANNERY SANDY LOAM, 8 TO 15 PERCENT SLOPES, MODERATELY ERODED	X	C/S	·	·	·	X	X	X	X	·	·	·	X	·
KaE2	KLINESVILLE SHALY SILT LOAM, 25 TO 50 PERCENT SLOPES, MODERATELY ERODED	X	C/S	·	·	X	·	·	X	X	·	·	·	·	·

RESOLUTION TO SOILS LIMITATIONS

SOIL LIMITATION RESOLUTIONS

LIMITATION	RESOLUTION
CUTBANKS CAVE	CONDUCT TRENCHING OPERATIONS IN ACCORDANCE WITH OSHA TECHNICAL MANUAL FOR TRENCHING. STABILIZE BANKS IMMEDIATELY WITH SEED, MULCH, EROSION CONTROL MATS, BONDED FIBER MATRIX, OR A COMBINATION OF THESE AND/OR OTHER METHODS.
CORROSIVE TO CONCRETE OR STEEL	PROTECT CONCRETE AND STEEL WITH PROTECTIVE COATINGS, SELECT ALTERNATIVE MATERIALS IN LIEU OF CONCRETE OR STEEL, OR A COMBINATION OF THESE AND OR OTHER METHODS.
DEPTH TO SATURATED ZONE \ SEASONAL HIGH WATER TABLE \ WETNESS \ FLOODING \ PONDING \ HYDRIC SOILS	SELECT VEGETATIVE SPECIES TOLERANT TO WET CONDITIONS, TILE VEGETATED AREAS, OR IMPLEMENT COMBINATIONS OF THESE AND/OR OTHER METHODS. UTILIZE PUMPED WATER FILTER BAGS TO DEWATER DISTURBED AREAS DURING CONSTRUCTION.
LOW STRENGTH \ LANDSLIDE PRONE	LOCATE ROADWAYS TO OTHER SOIL TYPES, IMPORT OTHER SOILS FOR ROADWAY CONSTRUCTION, OR IMPLEMENT A COMBINATION OF THESE AND/OR OTHER METHODS. FOR CUT/FILL SLOPES, REDUCE SLOPE, INSTALL EROSION CONTROL MATTING, OR IMPLEMENT A COMBINATION OF THESE AND/OR OTHER METHODS.
PIPING	IMPORT OTHER SOIL FOR EMBANKMENTS OF SEDIMENT BASINS, SEDIMENT TRAPS, STORM WATER RETENTION BASINS AND STORM WATER DETENTION BASINS, LOCATE THOSE FACILITIES ON OTHER SOIL TYPES, LIMIT EMBANKMENT SLOPE STEEPNESS, OR IMPLEMENT COMBINATIONS OF THESE AND/OR OTHER METHODS.
POOR SOURCE OF TOPSOIL	IDENTIFY AND RESOLVE CHARACTERISTICS THAT RENDER THE SOIL TYPES POORLY SUITED AS TOPSOIL. PERFORM SOIL TESTS TO DETERMINE THE REQUIRED SOIL AMENDMENTS AND APPLICATION RATES. IDENTIFY SOILS ON–SITE THAT ARE ADEQUATE SOURCES OF TOPSOIL AND STOCKPILE THESE FOR USE DURING RESTORATION.
FROST ACTION	IMPORT OTHER SOIL FOR EMBANKMENTS OF SEDIMENT BASINS, SEDIMENT TRAPS, STORM WATER RETENTION BASINS AND STORM WATER DETENTION BASINS, LOCATE THOSE FACILITIES ON OTHER SOIL TYPES, DO NOT CONSTRUCT EMBANKMENTS DURING PERIODS PRONE TO FROST, OR IMPLEMENT COMBINATIONS OF THESE AND/OR OTHER METHODS.
SHRINK–SWELL	LOCATE FACILITIES THAT MAY BE SUSCEPTIBLE TO DAMAGE FROM SHRINK OR SWELLING TO ANOTHER SOIL TYPE, IMPORT OTHER SOILS FOR THESE FACILITIES, OR IMPLEMENT COMBINATION OF THESE AND/OR OTHER METHODS.
DEPTH TO HARD BEDROCK	IF HARD BEDROCK IS ENCOUNTERED AND UNABLE TO BE EXCAVATED; CONTRACTOR IS TO CONTACT ENGINEER FOR GUIDANCE.

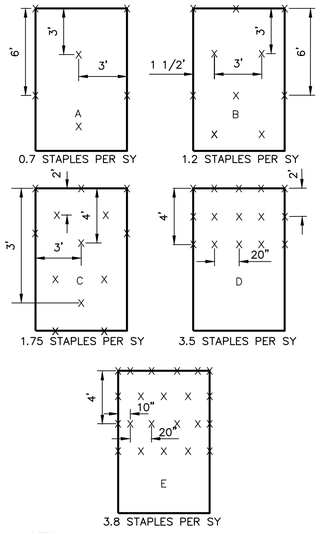

NOTES:
1. STAPLE PATTERN INDICATED IS FOR USE WITH SPECIFIED MATTING ONLY. CONSULT MANUFACTURER FOR PATTERN SHOULD AN ALTERNATE MATTING BE USED.
2. INCREASED STAPLE RATES MAY BE NECESSARY DEPENDING UPON SITE CONDITIONS. CONSULT MANUFACTURER FOR SPECIFIC RECOMMENDATIONS.

STAPLE PATTERN GUIDE DETAIL

NOT TO SCALE

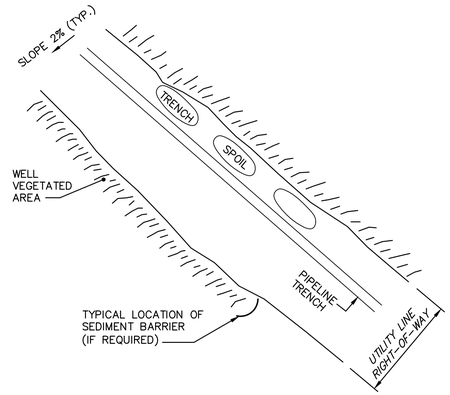

TRENCH EXCAVATION DETAIL

NOT TO SCALE

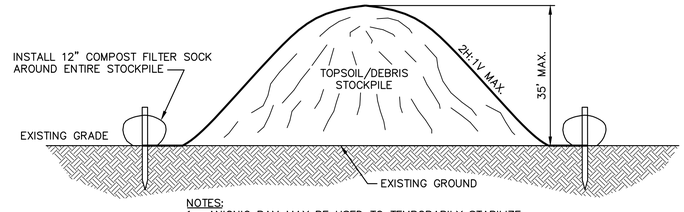

NOTES:
1. ANIONIC PAM MAY BE USED TO TEMPORARILY STABILIZE TOPSOIL STOCKPILES. HOWEVER, ANIONIC PAM MAY LOSE ITS EFFECTIVENESS IN AS LITTLE AS 2 MONTHS. THEREFORE, REAPPLY MIXTURE AS NECESSARY.

TOPSOIL/DEBRIS STOCKPILE DETAIL

NOT TO SCALE

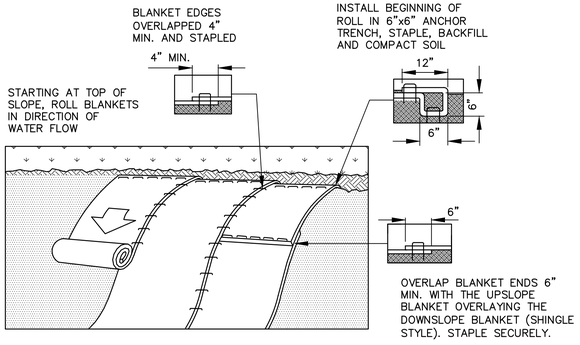

NOTES:
1. REFER TO MANUFACTURER'S RECOMMENDED INSTALLATION INSTRUCTIONS AND STAPLING PATTERN FOR STEEPNESS AND LENGTH OF SLOPE BEING BLANKETED.
2. PREPARE SEED BED (INCLUDING APPLICATION OF LIME, FERTILIZER, AND SEED) PRIOR TO INSTALLATION OF BLANKET.
3. SEED AND SOIL AMENDMENTS SHALL BE APPLIED ACCORDING TO THE RATES IN THE PLAN DRAWINGS PRIOR TO INSTALLING THE BLANKET.
4. PROVIDE ANCHOR TRENCH AT TOE OF SLOPE IN SIMILAR FASHION AS AT TOP OF SLOPE.
5. SLOPE SURFACE SHALL BE FREE OF ROCKS, CLODS, STICKS, AND GRASS.
6. BLANKET SHALL HAVE GOOD CONTINUOUS CONTACT WITH UNDERLYING SOIL THROUGHOUT ENTIRE LENGTH. LAY BLANKET LOOSELY AND STAKE OR STAPLE TO MAINTAIN DIRECT CONTACT WITH SOIL. DO NOT STRETCH BLANKET.
7. BLANKETED AREAS SHALL BE INSPECTED WEEKLY AND AFTER EACH RUNOFF EVENT UNTIL PERENNIAL VEGETATION IS ESTABLISHED TO A MINIMUM UNIFORM 70% COVERAGE THROUGHOUT THE BLANKETED AREA. DAMAGED OR DISPLACED BLANKETS SHALL BE RESTORED OR REPLACED WITHIN 5 CALENDAR DAYS.

EROSION CONTROL BLANKET SLOPE INSTALLATION DETAIL

NOT TO SCALE

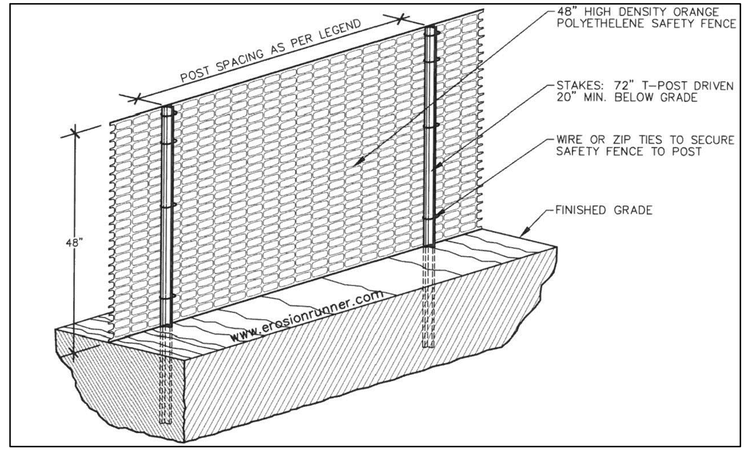

NOTES:
1. PROTECT WETLANDS DESIGNATED ON EROSION CONTROL PLAN WITH HIGH VISIBILITY FENCE.
2. WHEN PRACTICABLE, INSTALL HIGH VISIBILITY A MINIMUM 1' OUTSIDE OF WETLAND BOUNDARY
3. SAFETY FENCE SHOULD BE FASTENED SECURELY TO THE T–POSTS.
4. THE FENCING MUST REMAIN IN PLACE DURING ALL PHASES OF CONSTRUCTION; ANY CHANGE OF THE PROTECTIVE FENCING MUST BE APPROVED.

TEMPORARY PROTECTIVE FENCING DETAIL

NOT TO SCALE

NO.	REVISION	DATE	BY

COMMONWEALTH OF PENNSYLVANIA — REGISTERED PROFESSIONAL — MATTHEW J. VANASKIE — ENGINEER — PE077051

HRG
Herbert, Rowland & Grubic, Inc.
Engineering & Related Services
AN EMPLOYEE-OWNED COMPANY

369 East Park Drive
Harrisburg, PA 17111
(717) 564-1121
Fax (717) 564-1158
hrg@hrg-inc.com
www.hrg-inc.com

HALIFAX AREA
WATER AND SEWER AUTHORITY
203 ARMSTRONG STREET
HALIFAX, PA 17032
(717) 896-8083

EROSION AND SEDIMENTATION POLLUTION CONTROL DETAILS
FOR
HALIFAX TWP. SANITARY SEWER EXTENSION PROJECT
HALIFAX TOWNSHIP — DAUPHIN COUNTY — PENNSYLVANIA

PROJ. MGR. –	JJM
DESIGN–	MJW
CADD–	MJW
CHECKED–	MJV
SCALE–	AS NOTED
DATE–	AUG. 2022

DRAWING NO.
DT-11
SHEET NO.
72 OF 109
PROJECT 001650.0428

File name: P:\001650\001650.0428\CSD\Plan Sets\Main\W001650428-DT.dwg Layout:ESS Sep 30, 2022–3:36pm eliott

GENERAL NOTES

1. ALL EARTH DISTURBANCES, INCLUDING CLEARING AND GRUBBING AS WELL AS CUTS AND FILLS SHALL BE DONE IN ACCORDANCE WITH THE APPROVED E&S PLAN. A COPY OF THE APPROVED E&S PLAN (STAMPED, SIGNED, AND DATED BY THE REVIEWING AGENCY) MUST BE AVAILABLE AT THE PROJECT SITE AT ALL TIMES. THE REVIEWING AGENCY SHALL BE NOTIFIED OF ANY CHANGES TO THE APPROVED PLAN PRIOR TO IMPLEMENTATION OF THOSE CHANGES. THE REVIEWING AGENCY MAY REQUIRE A WRITTEN SUBMITTAL OF THOSE CHANGES FOR REVIEW AND APPROVAL AT ITS DISCRETION.
2. AT LEAST SEVEN (7) DAYS PRIOR TO STARTING ANY EARTH DISTURBANCE ACTIVITIES, INCLUDING CLEARING AND GRUBBING, THE OWNER AND/OR CONTRACTOR SHALL INVITE ALL CONTRACTORS, THE LANDOWNER, APPROPRIATE MUNICIPAL OFFICIALS, THE E&S PLAN PREPARER, THE PCSM PLAN PREPARER, THE LICENSED PROFESSIONAL RESPONSIBLE FOR OVERSIGHT OF CRITICAL STAGES OF IMPLEMENTATION OF THE PCSM PLAN, AND A REPRESENTATIVE FROM THE LOCAL CONSERVATION DISTRICT TO AN ON-SITE PRECONSTRUCTION MEETING.
3. AT LEAST THREE (3) DAYS PRIOR TO STARTING ANY EARTH DISTURBANCE ACTIVITIES, OR EXPANDING INTO AN AREA PREVIOUSLY UNMARKED, THE PENNSYLVANIA ONE CALL SYSTEM INC. SHALL BE NOTIFIED AT 1-800-242-1776 FOR THE LOCATION OF UNDERGROUND UTILITIES.
4. ALL EARTH DISTURBANCE ACTIVITIES SHALL PROCEED IN ACCORDANCE WITH THE SEQUENCE PROVIDED ON THE PLAN DRAWINGS. DEVIATION FROM THAT SEQUENCE MUST BE APPROVED IN WRITING FROM THE LOCAL CONSERVATION DISTRICT OR BY THE DEPARTMENT PRIOR TO IMPLEMENTATION.
5. AREAS TO BE FILLED ARE TO BE CLEARED, GRUBBED, AND STRIPPED OF TOPSOIL TO REMOVE TREES, VEGETATION, ROOTS AND OTHER OBJECTIONABLE MATERIAL.
6. CLEARING, GRUBBING, AND TOPSOIL STRIPPING SHALL BE LIMITED TO THOSE AREAS DESCRIBED IN EACH STAGE OF THE CONSTRUCTION SEQUENCE. GENERAL SITE CLEARING, GRUBBING AND TOPSOIL STRIPPING MAY NOT COMMENCE IN ANY STAGE OR PHASE OF THE PROJECT UNTIL THE E&S BMPS SPECIFIED IN THE BMP SEQUENCE FOR THAT STAGE OR PHASE HAVE BEEN INSTALLED AND ARE FUNCTIONING AS DESCRIBED IN THIS E&S PLAN.
7. AT NO TIME SHALL CONSTRUCTION VEHICLES BE ALLOWED TO ENTER AREAS OUTSIDE THE LIMIT OF DISTURBANCE BOUNDARIES SHOWN ON THE PLAN. THESE AREAS MUST BE CLEARLY MARKED AND FENCED OFF BEFORE CLEARING AND GRUBBING OPERATIONS BEGIN.
8. TOPSOIL REQUIRED FOR THE ESTABLISHMENT OF VEGETATION SHALL BE STOCKPILED AT THE LOCATION(S) SHOWN ON THE PLAN IN THE AMOUNT NECESSARY TO COMPLETE THE FINISH GRADING OF ALL EXPOSED AREAS THAT ARE TO BE STABILIZED BY VEGETATION. EACH STOCKPILE SHALL BE PROTECTED IN THE MANNER SHOWN ON THE PLAN. STOCKPILE HEIGHTS SHALL NOT EXCEED 35 FEET. STOCKPILE SLOPES SHALL BE 2H:1V OR FLATTER.
9. IMMEDIATELY DISCOVERING UNFORESEEN CIRCUMSTANCES POSING THE POTENTIAL FOR ACCELERATED EROSION AND/OR SEDIMENT POLLUTION, THE CONTRACTOR SHALL IMPLEMENT APPROPRIATE BEST MANAGEMENT PRACTICES TO MINIMIZE THE POTENTIAL FOR EROSION AND SEDIMENT POLLUTION AND NOTIFY THE LOCAL CONSERVATION DISTRICT AND/OR REGIONAL OFFICE OF THE DEPARTMENT.
10. ALL BUILDING MATERIALS AND WASTES SHALL BE REMOVED FROM THE SITE AND RECYCLED OR DISPOSED OF IN ACCORDANCE WITH THE DEPARTMENT'S SOLID WASTE MANAGEMENT REGULATIONS AT 25 PA. CODE 260.1 ET SEQ., 271.1, AND 287.1 ET. SEQ. NO BUILDING MATERIALS OR WASTES OR UNUSED BUILDING MATERIALS SHALL BE BURNED, BURIED, DUMPED, OR DISCHARGED AT THE SITE.
11. ALL OFF-SITE WASTE AND BORROW AREAS MUST HAVE AN E&S PLAN APPROVED BY THE LOCAL CONSERVATION DISTRICT OR THE DEPARTMENT FULLY IMPLEMENTED PRIOR TO BEING ACTIVATED.
12. THE CONTRACTOR IS RESPONSIBLE FOR ENSURING THAT ANY MATERIAL BROUGHT ON SITE IS CLEAN FILL. FORM FP-001 MUST BE RETAINED BY THE PROPERTY OWNER FOR ANY FILL MATERIAL AFFECTED BY A SPILL OR RELEASE OF A REGULATED SUBSTANCE BUT QUALIFYING AS CLEAN FILL DUE TO ANALYTICAL TESTING.
13. ALL PUMPING OF WATER FROM ANY WORK AREAS SHALL BE DONE ACCORDING TO THE PROCEDURE DESCRIBED IN THIS PLAN, OVER UNDISTURBED VEGETATED AREAS.
14. VEHICLES AND EQUIPMENT MAY NEITHER ENTER DIRECTLY NOR EXIT DIRECTLY ONTO PUBLIC STREETS OTHER THAN THE LOCATIONS SHOWN ON THE PLAN.
15. UNTIL THE SITE IS STABILIZED, ALL EROSION AND SEDIMENT BMPS SHALL BE MAINTAINED PROPERLY. MAINTENANCE SHALL INCLUDE INSPECTIONS OF ALL EROSION AND SEDIMENT BMPS AFTER EACH RUNOFF EVENT AND ON A WEEKLY BASIS. ALL PREVENTATIVE AND REMEDIAL MAINTENANCE WORK, INCLUDING CLEAN OUT, REPAIR, REPLACEMENT, REGARDING, RESEEDING, REMULCHING AND RENETTING MUST BE PERFORMED IMMEDIATELY. IF THE E&S BMPS FAIL TO PERFORM AS EXPECTED, REPLACEMENT BMPS, OR MODIFICATIONS OF THOSE INSTALLED WILL BE REQUIRED.
16. A LOG SHOWING DATES THAT E&S BMPS WERE INSPECTED AS WELL AS ANY DEFICIENCIES FOUND AND THE DATE THEY WERE CORRECTED SHALL BE MAINTAINED ON THE SITE AND BE MADE AVAILABLE TO REGULATORY AGENCY OFFICIALS AT THE TIME OF THE INSPECTION.
17. SEDIMENT TRACKED ONTO ANY PUBLIC ROADWAY OR SIDEWALK SHALL BE RETURNED TO THE CONSTRUCTION SITE BY THE END OF EACH WORK DAY AND DISPOSED OF IN A MANNER DESCRIBED ON THE PLAN. IN NO CASE SHALL THE SEDIMENT BE WASHED, SHOVELED, OR SWEPT INTO ANY ROADSIDE DITCH, STORM SEWER, OR SURFACE WATER.
18. ALL SEDIMENT REMOVED FROM BMPS SHALL BE DISPOSED OF IN THE MANNER DESCRIBED ON THE PLAN.
19. AREAS TO BE TOPSOILED SHALL BE SCARIFIED TO A MINIMUM DEPTH OF 3 TO 5 INCHES – 6 TO 12 INCHES ON COMPACTED SOILS – PRIOR TO PLACEMENT OF TOPSOIL. AREAS TO BE VEGETATED SHALL HAVE A MINIMUM 4 INCHES OF TOPSOIL IN PLACE PRIOR TO SEEDING AND MULCHING. FILL OUTSLOPES SHALL HAVE A MINIMUM OF 2 INCHES OF TOPSOIL.
20. ALL FILLS SHALL BE COMPACTED AS REQUIRED TO REDUCE EROSION, SLIPPAGE, SETTLEMENT, SUBSIDENCE OR OTHER RELATED PROBLEMS. FILL INTENDED TO SUPPORT BUILDINGS, STRUCTURES, AND CONDUITS, ETC. SHALL BE COMPACTED IN ACCORDANCE WITH LOCAL REQUIREMENTS OR CODES.
21. ALL EARTHEN FILLS SHALL BE PLACED IN COMPACTED LAYERS NOT TO EXCEED 9 INCHES IN THICKNESS.
22. FILL MATERIALS SHALL BE FREE OF FROZEN PARTICLES, BRUSH, ROOTS, SOD, OR OTHER FOREIGN OR OBJECTIONABLE MATERIALS THAT WOULD INTERFERE WITH OR PREVENT CONSTRUCTION OF SATISFACTORY FILLS.
23. FROZEN MATERIALS OR SOFT, MUCKY, OR HIGHLY COMPRESSIBLE MATERIALS SHALL NOT BE INCORPORATED INTO FILLS.
24. FILL SHALL NOT BE PLACED ON SATURATED OR FROZEN SURFACES.
25. SEEPS OR SPRINGS ENCOUNTERED DURING CONSTRUCTION SHALL BE HANDLED IN ACCORDANCE WITH THE STANDARD SPECIFICATION FOR SUBSURFACE DRAIN OR OTHER APPROVED METHOD.
26. ALL GRADED AREAS SHALL BE PERMANENTLY STABILIZED IMMEDIATELY UPON REACHING FINISHED GRADE. CUT SLOPES IN COMPETENT BEDROCK AND ROCK FILLS NEED NOT BE VEGETATED. SEEDED AREAS WITHIN 50 FEET OF A SURFACE WATER, OR AS OTHERWISE SHOWN ON THE PLAN DRAWINGS, SHALL BE BLANKETED ACCORDING TO THE STANDARDS OF THIS PLAN.
27. IMMEDIATELY AFTER EARTH DISTURBANCE ACTIVITIES CEASE IN ANY AREAS OR SUBAREA OF THE PROJECT, THE CONTRACTOR SHALL STABILIZE ALL DISTURBED AREAS. DURING NON-GERMINATING MONTHS, MULCH OR PROTECTIVE BLANKETING SHALL BE APPLIED AS DESCRIBED IN THE PLAN. AREAS NOT AT FINISHED GRADE, WHICH WILL BE REACTIVATED IN ONE (1) YEAR, MAY BE STABILIZED IN ACCORDANCE WITH THE TEMPORARY STABILIZATION SPECIFICATIONS. THOSE AREAS WHICH WILL NOT BE REACTIVATED WITHIN ONE (1) YEAR SHALL BE STABILIZED IN ACCORDANCE WITH THE PERMANENT STABILIZATION SPECIFICATIONS.
28. PERMANENT STABILIZATION IS DEFINED AS A MINIMUM UNIFORM 70% VEGETATIVE COVER OR OTHER PERMANENT NON-VEGETATIVE CONVER WITH A DENSITY SUFFICIENT TO RESIST ACCELERATED EROSION. CUT AND FILL SLOPES SHALL BE CAPABLE OF RESISTING FAILURE DUE TO SLUMPING, SLIDING, OR OTHER MOVEMENTS.
29. E&S BMPS SHALL REMAIN FUNCTIONAL AS SUCH UNTIL ALL AREAS TRIBUTARY TO THEM ARE PERMANENTLY STABILIZED OR UNTIL THEY ARE REPLACED BY ANOTHER BMP APPROVED BY THE LOCAL CONSERVATION DISTRICT OR THE DEPARTMENT.
30. UPON COMPLETION OF ALL EARTH DISTURBANCE ACTIVITIES AND PERMANENT STABILIZATION OF ALL DISTURBED AREAS, THE OWNER AND/OR CONTRACTOR SHALL CONTACT THE LOCAL CONSERVATION DISTRICT FOR AN INSPECTION PRIOR TO REMOVAL/CONVERSION OF THE E&S BMPS.
31. AFTER FINAL SITE STABILIZATION HAS BEEN ACHIEVED, TEMPORARY EROSION AND SEDIMENT BMPS MUST BE REMOVED OR CONVERTED TO PERMANENT POST CONSTRUCTION STORMWATER MANAGEMENT BMPS. AREAS DISTURBED DURING REMOVAL OR CONVERSION OF THE BMPS SHALL BE STABILIZED IMMEDIATELY. IN ORDER TO ENSURE RAPID REVEGETATION OF DISTURBED AREAS, SUCH REMOVAL/CONVERSIONS ARE TO BE DONE ONLY DURING THE GERMINATING SEASON.
32. UPON COMPLETION OF ALL EARTH DISTURBANCE ACTIVITIES AND PERMANENT STABILIZATION OF ALL DISTURBED AREAS, THE OWNER AND/OR CONTRACTOR SHALL CONTACT THE LOCAL CONSERVATION DISTRICT TO SCHEDULE A FINAL INSPECTION.
33. FAILURE TO CORRECTLY INSTALL E&S BMPS, FAILURE TO PREVENT SEDIMENT-LADEN RUNOFF FROM LEAVING THE CONSTRUCTION SITE, OR FAILURE TO TAKE IMMEDIATE CORRECTIVE ACTION TO RESOLVE FAILURE OF E&S BMPS MAY RESULT IN ADMINISTRATIVE, CIVIL, AND/OR CRIMINAL PENALTIES BEING INSTITUTED BY THE DEPARTMENT AS DEFINED IN SECTION 602 OF THE PENNSYLVANIA CLEAN STREAMS LAW. THE CLEAN STREAMS LAW PROVIDES FOR UP TO $10,000 PER DAY IN CIVIL PENALTIES, UP TO $10,000 IN SUMMARY CRIMINAL PENALTIES, AND UP TO $25,000 IN MISDEMEANOR CRIMINAL PENALTIES FOR EACH VIOLATION.
34. CONCRETE WASH WATER SHALL BE HANDLED IN A MANNER DESCRIBED ON THE PLAN. IN NO CASE SHALL IT BE ALLOWED TO ENTER ANY SURFACE WATERS OR GROUNDWATER SYSTEMS.
35. EROSION CONTROL BLANKETING SHALL BE INSTALLED ON ALL SLOPES 3H:1V OR STEEPER AND WITHIN 50 FEET OF A SURFACE WATER AND ON ALL OTHER DISTURBED AREAS SPECIFIED ON THE PLAN.

PRE-CONSTRUCTION SEQUENCE

1. ALL APPLICABLE PERMITS AND APPROVALS REQUIRED FOR THIS PROJECT SHALL BE SECURED PRIOR TO THE START OF CONSTRUCTION. COPIES OF PERMITS, PLANS AND APPROVALS SHALL BE KEPT ON-SITE AT ALL TIMES.
2. CONTRACTOR SHALL NOTIFY THE PA ONE-CALL SYSTEM AT 1-800-242-1776 FOR BURIED UTILITIES AT LEAST THREE (3) DAYS BEFORE STARTING ANY EARTH DISTURBANCE ACTIVITIES.
3. CONTRACTOR SHALL CONTACT THE DAUPHIN COUNTY CONSERVATION DISTRICT (DCCD) TO SCHEDULE A PRE-CONSTRUCTION CONFERENCE AT LEAST SEVEN (7) DAYS PRIOR TO PLANNED EARTH DISTURBANCE ACTIVITIES.
4. ALTERNATIVES TO THE STAGING OR SPECIFICATIONS GIVEN IN THIS E&S CONTROL PLAN MUST FIRST BE APPROVED BY THE DCCD PRIOR TO IMPLEMENTATION.
5. NON-DESIGNATED WASTE/BORROW AREAS MUST HAVE AN APPROVED E&S CONTROL PLAN.
6. RESPONSIBILITY FOR IMPLEMENTING THE E&S CONTROLS SHALL BE DESIGNATED TO AT LEAST ONE INDIVIDUAL WHO WILL BE PRESENT AT THE PROJECT SITE DAILY.
7. LIMITS OF TREE CLEARING AND LIMITS OF DISTURBANCE SHALL BE FIELD MARKED PRIOR TO CONSTRUCTION.

SEWER FORCEMAIN CONSTRUCTION SEQUENCE

ALL CONSTRUCTION FOR STREAM CROSSING ACTIVITIES SHALL FOLLOW THE "STREAM CROSSING NOTES" ON THIS SHEET.

1. LOCATE AND DELINEATE WETLAND BOUNDARIES AT THE LOCATIONS SHOWN ON THE PLAN.
2. INSTALL EROSION AND SEDIMENT CONTROLS SUCH AS COMPOST FILTER SOCK, INLET PROTECTION, AND CONSTRUCTION ENTRANCES DOWNSLOPE OF THE PROPOSED CONSTRUCTION ACTIVITY.
3. CLEARING, GRUBBING, AND TOPSOIL STRIPPING SHALL BE LIMITED TO A PIPE RUN AND INFRASTRUCTURE THAT CAN BE EXCAVATED AND BACKFILLED IN ONE WORKING DAY. CLEARING, GRUBBING AND TOPSOIL STRIPPING MAY NOT COMMENCE IN ANY STAGE OR PHASE OF THE PROJECT UNTIL THE E&S BMPS SPECIFIED IN THE BMP SEQUENCE FOR THAT STAGE OR PHASE HAVE BEEN INSTALLED AND ARE FUNCTIONING AS DESCRIBED IN THIS E&S PLAN.
4. PERFORM EXCAVATION, INSTALLATION OF CLEANOUTS, VALVES, MANHOLES, AND OTHER APPURTENANCES AS IDENTIFIED ON THE PLAN. IF EXCAVATION MUST BE DEWATERED, PUMPED WATER SHALL BE FILTERED THROUGH A PUMPED WATER FILTER BAG IN ACCORDANCE WITH THE STANDARD CONSTRUCTION DETAIL.
5. AREAS OF EARTH DISTURBANCE WITH SLOPES 3:1 OR GREATER SHALL RECEIVE AN EROSION CONTROL BLANKET.
6. COMPLETE PERMANENT RESTORATION AS SOON AS POSSIBLE FOLLOWING EXCAVATION, PARTICULARLY GRAVEL AND PAVED ROADWAY AREAS. THIS WILL MINIMIZE SEDIMENT BEING CARRIED AWAY FROM THE SITE.
7. STABILIZE ANY REMAINING DISTURBED SOIL WHICH SHALL REMAIN EXPOSED FOR MORE THAN THREE (3) DAYS ACCORDING TO THE TEMPORARY SEEDING SCHEDULE.
8. AFTER ALL AREAS ARE AT LEAST 70% PERMANENTLY STABILIZED, TEMPORARY CONTROL MEASURES SHALL BE REMOVED AFTER DCCD APPROVAL.

GRAVITY SEWER MAIN, LATERAL, AND PUMP STATION CONSTRUCTION SEQUENCE

ALL CONSTRUCTION FOR STREAM CROSSING ACTIVITIES SHALL FOLLOW THE "STREAM CROSSING NOTES" ON THIS SHEET.

1. LOCATE AND DELINEATE WETLAND BOUNDARIES AT THE LOCATIONS SHOWN ON THE PLAN.
2. INSTALL EROSION AND SEDIMENT CONTROLS SUCH AS COMPOST FILTER SOCK, INLET PROTECTION, AND CONSTRUCTION ENTRANCES DOWNSLOPE OF THE PROPOSED CONSTRUCTION ACTIVITY.
3. CLEARING, GRUBBING, AND TOPSOIL STRIPPING SHALL BE LIMITED TO A PIPE RUN AND INFRASTRUCTURE THAT CAN BE EXCAVATED AND BACKFILLED IN ONE WORKING DAY. CLEARING, GRUBBING AND TOPSOIL STRIPPING MAY NOT COMMENCE IN ANY STAGE OR PHASE OF THE PROJECT UNTIL THE E&S BMPS SPECIFIED IN THE BMP SEQUENCE FOR THAT STAGE OR PHASE HAVE BEEN INSTALLED AND ARE FUNCTIONING AS DESCRIBED IN THIS E&S PLAN.
4. INSTALL SLOPES, BRING UP TO GRADE AND INSTALL PUMP STATION.
5. INSTALL DRIVEWAY, ALL APPLICABLE STORMWATER BMPS FOR EACH SITE. THE UNDERGROUND INFILTRATION TRENCH, RAIN GARDEN, INFILTRATION BASIN, AND SOIL AMENDMENT INSTALLATIONS ARE CRITICAL STAGES AND REQUIRE LICENSED PROFESSIONAL OBSERVATION. INLET PROTECTION SHALL BE PLACED ON THE TRENCH INLET TO PREVENT SEDIMENT LADEN WATER FROM ENTERING TRENCH.
6. EXCAVATE TRENCH, INSTALL SANITARY SEWER INFRASTRUCTURE, COMPACT, AND BACKFILL TRENCH. TRENCH SPOIL SHALL BE PLACED ON THE HIGH SIDE OF THE TRENCH TO ENSURE SEDIMENT LADEN RUNOFF CAPTURE WITHIN THE TRENCH. IF THE TRENCH MUST BE DEWATERED, PUMPED WATER SHALL BE FILTERED THROUGH A PUMPED WATER FILTER BAG.
7. COMPLETE PERMANENT RESTORATION AS SOON AS POSSIBLE FOLLOWING EXCAVATION, PARTICULARLY GRAVEL AND PAVED ROADWAY AREAS. THIS WILL MINIMIZE SEDIMENT BEING CARRIED AWAY FROM THE SITE.
8. STABILIZE ANY REMAINING DISTURBED SOIL WHICH SHALL REMAIN EXPOSED FOR MORE THAN THREE (3) DAYS ACCORDING TO THE TEMPORARY SEEDING SCHEDULE.
9. AFTER ALL AREAS ARE AT LEAST 70% PERMANENTLY STABILIZED, TEMPORARY CONTROL MEASURES SHALL BE REMOVED AFTER DCCD APPROVAL.

MAINTENANCE FOR TEMPORARY CONTROL MEASURES

ALL E&S CONTROLS MUST BE PROPERLY MAINTAINED UNTIL THE PROJECT SITE HAS BEEN STABILIZED. ALL MAINTENANCE SHALL BE IN CONFORMANCE WITH THE PA DEP EROSION AND SEDIMENT POLLUTION CONTROL PROGRAM MANUAL DATED MARCH, 2012.

GENERAL MAINTENANCE SHALL INCLUDE:

1. INSPECTION OF ALL E&S CONTROLS AND BMPS AFTER EACH RUNOFF EVENT AND ON A WEEKLY BASIS.
2. ALL PREVENTATIVE AND REMEDIAL MAINTENANCE WORK, INCLUDING CLEAN OUT, REPAIR AND REPLACEMENT SHALL BE PERFORMED IMMEDIATELY.
3. CONTRACTOR SHALL PROVIDE WRITTEN DOCUMENTATION OF INSPECTIONS AND REPAIR/REPLACEMENT OF BMPS.
4. SEDIMENT REMOVED FROM E&S CONTROLS DURING MAINTENANCE ARE TO BE SPREAD, PERMANENTLY SEEDED, AND MULCHED.

SPECIFIC MAINTENANCE SHALL INCLUDE:

1. ROCK CONSTRUCTION ENTRANCE – THICKNESS OF THE STABILIZED CONSTRUCTION ENTRANCE SHALL BE CONSTANTLY MAINTAINED TO THE SPECIFIED DIMENSIONS BY ADDING ROCK AS NEEDED. THE ENTRANCE SHALL BE CLEANED AND REDRESSED WHEN VOIDS BECOME CHOKED WITH MUD AND SEDIMENT.
2. COMPOST FILTER SOCKS – SEDIMENT SHALL BE REMOVED WHEN ACCUMULATIONS REACH ONE-HALF THE ABOVE GROUND HEIGHT OF THE BARRIER. ANY SECTION OF COMPOST FILTER SOCK WHICH HAS BEEN UNDERMINED OR TOPPED SHALL BE IMMEDIATELY REPAIRED.
3. EROSION CONTROL BLANKET – THE EROSION CONTROL BLANKET SHALL BE CHECKED FOR TORN OR LOOSE STAPLED AREAS.
4. VEGETATIVE STABILIZATION – VEGETATIVE STABILIZATION SHALL BE PERIODICALLY INSPECTED FOR PROPER GROWTH. ANY AREAS NOT RESPONDING SHALL BE PROMPTLY RESEEDED. AREAS WHICH SHOW SIGNS OF EROSION PRIOR TO STABILIZATION SHALL BE GRADED, RE-SEEDED, AND RE-MULCHED AS SOON AS POSSIBLE.

OPERATIONS AND MAINTENANCE REPORT

THE CONTRACTOR SHALL PREPARE A WRITTEN REPORT OR LOG BOOK DETAILING INSPECTION ACTIVITIES IN ACCORDANCE WITH PERMIT REGULATIONS. THIS REPORT SHALL BE PROVIDED UPON REQUEST TO AUTHORITIES HAVING JURISDICTION.

CRITICAL STAGES OF CONSTRUCTION

LISTED BELOW ARE THE CRITICAL STAGES OF IMPLEMENTATION OF THE PCSM PLAN FOR WHICH THE CONTRACTOR MUST CONTACT THE ENGINEER AT LEAST 3 WORKING DAYS PRIOR TO COMMENCEMENT OF THE STAGE. A LICENSED PROFESSIONAL OR DESIGNEE MUST BE PRESENT ON SITE TO OBSERVE CONSTRUCTION OR CERTIFY CONSTRUCTION:

- INSTALLATION OF RAIN GARDENS

EROSION AND SEDIMENTATION POLLUTION CONTROL GUIDELINES FOR MINOR PLANS

1. A LOGICAL CONSTRUCTION SEQUENCE SHALL BE DEVELOPED THAT INCLUDES THE INSTALLATION OF E&SPC FACILITIES, AND BEST MANAGEMENT PRACTICES (BMP'S), BEFORE EARTHMOVING MAY COMMENCE.
2. E&SPC FACILITIES AND BMP'S SHALL BE CORRECTLY INSTALLED AND MAINTAINED. MAINTENANCE INFORMATION AND CONSTRUCTION DETAILS MAY BE OBTAINED FROM THE COUNTY CONSERVATION DISTRICT.
3. EARTH DISTURBANCE SHALL TAKE PLACE WITHIN A DEFINED LIMIT OF DISTURBANCE AND IMMEDIATELY PRIOR TO CONSTRUCTION.
4. DEVELOPMENT PLANS SHALL PRESERVE SALIENT FEATURES, MINIMIZE LAND CUTS AND FILLS AND CONFORM TO GENERAL TOPOGRAPHY. PLANS SHALL BE DESIGNED AND IMPLEMENTED SO AS TO CREATE THE LEAST POTENTIAL FOR EROSION AND TO ADEQUATELY CONTAIN THE VOLUME AND REDUCE THE VELOCITY OF SURFACE WATER RUNOFF.
5. NATURAL VEGETATION SHALL BE RETAINED, PROTECTED AND SUPPLEMENTED PRIOR TO AND DURING CONSTRUCTION.
6. TOPSOIL SHALL BE REMOVED FROM CONSTRUCTION AREAS AND STOCKPILED FOR FINAL GRADING AND SEEDBED PREPARATION. DOWNSLOPE AREAS OF ANY STOCKPILES, CONSTRUCTION OR BORROW AREAS SHALL BE PROTECTED WITH CORRECTLY INSTALLED AND MAINTAINED SILT FENCE, STRAW BALES OR SEDIMENT TRAPS PRIOR TO ANY EARTH DISTURBANCE IN ORDER TO MINIMIZE SEDIMENT LADEN RUNOFF.
7. ALL CUT AND FILLS SHALL BE BROUGHT TO FINAL GRADE EARLY IN THE CONSTRUCTION SEQUENCE, AND STABILIZED IMMEDIATELY WITH SEED AND MULCH.
8. CURRENT REGULATIONS STATE: (a) UPON COMPLETION OF AN EARTH DISTURBANCE ACTIVITY OR ANY STAGE OR PHASE OF AN ACTIVITY, THE SITE SHALL BE IMMEDIATELY SEEDED, MULCHED OR OTHERWISE PROTECTED FROM ACCELERATED EROSION AND SEDIMENTATION. (b) EROSION AND SEDIMENT CONTROL BMP'S SHALL BE IMPLEMENTED AND MAINTAINED UNTIL PERMANENT STABILIZATION IS COMPLETE. (c) FOR AN EARTH DISTURBANCE ACTIVITY OR ANY STAGE OR PHASE OF AN ACTIVITY TO BE CONSIDERED PERMANENTLY STABILIZED, THE DISTURBED AREAS SHALL BE COVERED WITH ONE OF THE FOLLOWING: (1) A MINIMUM UNIFORM 70% PERENNIAL VEGETATIVE COVER, WITH A DENSITY CAPABLE OF RESISTING ACCELERATED EROSION AND SEDIMENTATION. (2) AN ACCEPTABLE BMP WHICH PERMANENTLY MINIMIZES ACCELERATED EROSION AND SEDIMENTATION.
9. THE PENN STATE EROSION CONTROL AND CONSERVATION PLANTINGS ON NONCROPLAND GUIDE OR AGRONOMY GUIDE SHALL BE CONSULTED FOR PERMANENT AND TEMPORARY SEEDING AND MULCHING TYPES AND RATES. (STRAW MULCH SHALL BE APPLIED AT A RATE OF AT LEAST 3 TONS PER ACRE. SLOPES STEEPER THAN 3:1 SHALL BE CORRECTLY LINED WITH APPROPRIATE TURF REINFORCED MATTING.) OTHER HELPFUL PUBLICATIONS INCLUDE TURFGRASS ESTABLISHMENT (SPECIAL CIRCULAR 163), TURFGRASS SEED AND SEED MIXTURES (EXTENSION CIRCULAR 391), AND PRINCIPLES OF TURFGRASS IRRIGATION (SPECIAL CIRCULAR 158). THE PUBLICATIONS REFERENCED ARE AVAILABLE FROM THE PENN STATE EXTENSION OFFICE.
10. ALL RECYCLING AND DISPOSAL OF CONSTRUCTION WASTE SHALL BE IN ACCORDANCE WITH LOCAL AND STATE RULES AND REGULATIONS FOR WASTE MANAGEMENT. CONSTRUCTION WASTE INCLUDES BUT IS NOT LIMITED TO: EXCESS SOIL AND ROCK, BUILDING MATERIALS, CONCRETE AND CONCRETE WASH WATER, SANITARY WASTE AND ANY OTHER MATERIALS THAT COULD ADVERSELY IMPACT SURFACE OR GROUND WATER QUALITY.

STREAM CROSSING NOTES

1. TRENCH PLUGS SHALL BE INSTALLED WITHIN THE TRENCH ON BOTH SIDES OF THE STREAM CHANNEL.
2. THE STREAM CROSSINGS SHALL BE COMPLETED WITHIN 72 HOURS (FROM START TO FINISH) INCLUDING THE TRENCH BACKFILLING, STABILIZATION OF THE STREAM BANKS AND STABILIZATION OF THE AREA 50' BACK FROM THE TOP OF EACH STREAM BANK.
3. FACILITIES FOR REMOVING SEDIMENT FROM PUMPED WATER SHALL BE AVAILABLE AT THE STREAM CROSSING SITE BEFORE TRENCHING COMMENCES AND MAINTAINED UNTIL TRENCH BACKFILLING IS COMPLETED. ASSEMBLY AREAS, TEMPORARY EQUIPMENT AND NONHAZARDOUS MATERIAL STORAGE AREAS SHALL BE LOCATED AT LEAST 50' BACK FROM THE TOP OF THE STREAM BANK.
4. HAZARDOUS OR POLLUTIVE MATERIAL STORAGE AREAS SHALL BE LOCATED AT LEAST 100' BACK FROM THE TOP OF THE STREAM BANK.
5. ALL EXCESS EXCAVATED MATERIAL SHALL BE IMMEDIATELY REMOVED FROM STREAM CROSSING.
6. WHENEVER POSSIBLE, WORK SHALL BE SCHEDULED FOR LOW FLOW SEASONS. NORMAL FLOW SHALL BE CONVEYED PAST THE WORK AREAS BY MEANS OF A PIPE OR PUMP. ALL SUCH BYPASSES SHALL BE COMPLETED AND STABILIZED PRIOR TO DIVERTED FLOW.
7. ANY IN-CHANNEL EXCAVATIONS SHALL BE DONE FROM THE TOP BANKS WHEREVER POSSIBLE. WHERE THIS IS NOT POSSIBLE, A TEMPORARY CROSSING SHALL BE PROVIDED FOR ANY EQUIPMENT WORKING FROM WITHIN THE CHANNEL. UPON COMPLETION, ALL CHANNEL ENTRANCES SHALL BE RESTORED TO PRE-CONSTRUCTION CONFIGURATIONS, AS MUCH AS POSSIBLE, AND STABILIZED.
8. ALL EXCAVATED CHANNEL MATERIALS THAT WILL BE SUBSEQUENTLY USED AS BACKFILL SHALL BE PLACED IN A TEMPORARY STOCKPILE LOCATED OUTSIDE THE CHANNEL. A SEDIMENT BARRIER SHALL BE INSTALLED BETWEEN THE STORAGE PILE AND THE STREAM CHANNEL.
9. ALL EXCAVATED MATERIAL THAT WILL NOT BE USED ON SITE MUST BE IMMEDIATELY REMOVED TO A DISPOSAL SITE HAVING AN APPROVED EROSION AND SEDIMENT POLLUTION CONTROL PLAN.
10. ANY PUMPED WATER FROM EXCAVATED AREAS MUST BE FILTERED PRIOR TO DISCHARGING INTO WATERS OF THE COMMONWEALTH. SEE FILTER BAG DETAIL.
11. ALL DISTURBED AREAS WITHIN THE EXISTING CHANNEL SHALL BE COMPLETED AND STABILIZED BEFORE FLOW IS REDIRECTED INTO IT. SUITABLE PROTECTION CHANNEL SHALL BE PROVIDED FOR THE STREAM CHANNEL FROM ANY DISTURBED AREAS THAT HAVE NOT YET ACHIEVED STABILIZATION.

RECYCLING AND DISPOSAL OF MATERIALS

1. CONSTRUCTION WASTES (INCLUDING BUT NOT LIMITED TO EXCESS SOILS, BUILDING MATERIALS, CONCRETE WASH WATER, SANITARY WASTES, ETC.) ARE TO BE DISPOSED OF OR RECYCLED AT APPROPRIATE, PERMITTED FACILITIES.
2. THE CONTRACTOR MUST USE ENVIRONMENTAL DUE DILIGENCE TO ENSURE THAT THE FILL MATERIAL ASSOCIATED WITH THIS PROJECT QUALIFIES AS CLEAN FILL MATERIAL. THE CONTRACTOR IS RESPONSIBLE FOR SECURING ANY REQUIRED PERMITS.
3. ENVIRONMENTAL DUE DILIGENCE IS DEFINED AS INVESTIGATIVE TECHNIQUES, INCLUDING, BUT NOT LIMITED TO, VISUAL PROPERTY INSPECTIONS, ELECTRONIC DATABASE SEARCHES, REVIEW OF PROPERTY OWNERSHIP, REVIEW OF PROPERTY USE HISTORY, SANBORN MAPS, ENVIRONMENTAL QUESTIONNAIRES, TRANSACTION SCREENS, ANALYTICAL TESTING, ENVIRONMENTAL ASSESSMENTS OR AUDITS. ANALYTICAL TESTING IS NOT A REQUIRED PART OF DUE DILIGENCE UNLESS VISUAL INSPECTION AND/OR REVIEW OF THE PAST LAND USE OF THE PROPERTY INDICATES THAT THE FILL MAY HAVE BEEN SUBJECTED TO A SPILL OR RELEASE OF REGULATED SUBSTANCE. IF THE FILL MAY HAVE BEEN AFFECTED BY A SPILL OR RELEASE OF A REGULATED SUBSTANCE. IT MUST BE TESTED TO DETERMINE IF IT QUALIFIES AS CLEAN FILL. TESTING SHALL BE PERFORMED IN ACCORDANCE WITH APPENDIX A OF THE DEPARTMENT'S POLICY "MANAGEMENT OF FILL". FILL MATERIAL THAT DOES NOT QUALIFY AS CLEAN FILL IS REGULATED FILL. REGULATED FILL IS WASTE AND MUST BE MANAGED IN ACCORDANCE WITH THE DEPARTMENT'S MUNICIPAL OR RESIDUAL WASTE REGULATIONS BASED ON 25 PA. CODE CHAPTERS 287 RESIDUAL WASTE MANAGEMENT OR 271 MUNICIPAL WASTE MANAGEMENT, WHICHEVER IS APPLICABLE.
4. CLEAN FILL IS DEFINED AS: UNCONTAMINATED, NON-WATER SOLUBLE, NON-DECOMPOSABLE, INERT, SOLID MATERIAL. THE TERM INCLUDES SOIL, ROCK, STONE, DREDGED MATERIAL, USED ASPHALT, AND BRICK, BLOCK, OR CONCRETE FROM CONSTRUCTION AND DEMOLITION ACTIVITIES THAT IS SEPARATE FROM OTHER WASTE AND IS RECOGNIZABLE AS SUCH. THE TERM DOES NOT INCLUDE MATERIALS PLACED IN OR ON THE WATERS OF THE COMMONWEALTH UNLESS OTHERWISE AUTHORIZED. THE TERM "USED ASPHALT" DOES NOT INCLUDE MILLED ASPHALT OR ASPHALT THAT HAS BEEN PROCESSED FOR RE-USE.

PREPAREDNESS, PREVENTION AND CONTINGENCY (PPC) PLAN

NOTE: A COPY OF THIS PLAN MUST BE KEPT AT THE CONSTRUCTION SITE AT ALL TIMES.

THE PURPOSE OF THIS PLAN IS TO ADDRESS OTHER ASPECTS OF POLLUTION CONTROL OTHER THAN EROSION AND SEDIMENTATION POLLUTION CONTROL COVERED IN THE EROSION AND SEDIMENT CONTROL PLAN. THIS PLAN WILL COVER SOLID WASTE DISPOSAL, SANITARY FACILITIES, WATER SOURCES, CONCRETE WASTE, FUEL TANKS, HAZARDOUS WASTE AND SPILL REPORTING.

1. SOLID WASTE DISPOSAL

   NO SOLID MATERIALS, INCLUDING BUILDING MATERIALS, ARE ALLOWED TO BE DISCHARGED FROM THE SITE WITH STORMWATER. ALL SOLID WASTE, INCLUDING DISPOSABLE MATERIALS INCIDENTAL TO THE MAJOR CONSTRUCTION ACTIVITIES, MUST BE COLLECTED AND PLACED IN CONTAINERS. THE CONTAINERS WILL BE EMPTIED AS NECESSARY BY A CONTRACT TRASH DISPOSAL SERVICE AND HAULED AWAY FROM THE SITE.

2. SANITARY FACILITIES

   ALL PERSONNEL INVOLVED WITH CONSTRUCTION ACTIVITIES MUST COMPLY WITH STATE AND LOCAL SANITARY OR SEPTIC SYSTEM REGULATIONS. TEMPORARY SANITARY FACILITIES MUST BE PROVIDED AT THE SITE THROUGHOUT THE CONSTRUCTION PHASE. THEY MUST BE UTILIZED BY ALL CONSTRUCTION PERSONNEL AND MUST BE SERVICED BY A COMMERCIAL OPERATOR.

3. WATER SOURCES

   NON-STORM WATER COMPONENTS OF SITE DISCHARGE MUST BE CLEAN WATER. WATER USED FOR CONSTRUCTION WHICH DISCHARGES FROM THE SITE MUST ORIGINATE FROM A PUBLIC WATER SUPPLY OR PRIVATE WELL APPROVED BY THE STATE HEALTH DEPARTMENT. WATER USED FOR CONSTRUCTION THAT DOES NOT ORIGINATE FROM AN APPROVED PUBLIC SUPPLY MUST NOT DISCHARGE FROM THE SITE. IT CAN BE RETAINED IN THE PONDS UNTIL IT INFILTRATES OR EVAPORATES.

4. CONCRETE WASTE FROM CONCRETE READY-MIX TRUCKS

   DISCHARGE OF EXCESS OR WASTE CONCRETE AND/OR WASH WATER FROM CONCRETE TRUCKS WILL BE ALLOWED ON THE CONSTRUCTION SITE, BUT ONLY IN SPECIFICALLY DESIGNATED DIKED AREAS PREPARED TO PREVENT CONTACT BETWEEN THE CONCRETE AND/OR WASH WATER AND STORM WATER THAT WILL BE DISCHARGED FROM THE SITE. ALTERNATIVELY, WASTE CONCRETE CAN BE PLACED INTO FORMS TO MAKE RIPRAP OR OTHER USEFUL CONCRETE PRODUCTS. THE CURED RESIDUE FROM THE CONCRETE WASHOUT DIKED AREAS SHALL BE DISPOSED IN ACCORDANCE WITH APPLICABLE STATE AND FEDERAL REGULATIONS. THE JOBSITE SUPERINTENDENT IS RESPONSIBLE FOR ASSURING THAT THESE PROCEDURES ARE FOLLOWED.

5. FUEL TANKS

   TEMPORARY ON-SITE FUEL TANKS FOR CONSTRUCTION VEHICLES SHALL MEET ALL STATE AND FEDERAL REGULATIONS. TANKS SHALL HAVE APPROVED SPILL CONTAINMENT WITH THE CAPACITY REQUIRED BY THE APPLICABLE REGULATIONS. THE TANK SHALL BE IN SOUND CONDITION AND FREE OF RUST OR OTHER DAMAGE WHICH MIGHT COMPROMISE CONTAINMENT. HOSES, VALVES, FITTINGS, CAPS, FILLER NOZZLES, AND ASSOCIATED HARDWARE SHALL BE MAINTAINED IN PROPER WORKING CONDITIONS AT ALL TIMES.

6. HAZARDOUS WASTE MANAGEMENT AND SPILL REPORTING PLAN

   ANY HAZARDOUS OR POTENTIALLY HAZARDOUS WASTE THAT IS BROUGHT ONTO THE CONSTRUCTION SITE MUST BE HANDLED PROPERLY IN ORDER TO REDUCE THE POTENTIAL FOR STORM WATER POLLUTION. ALL MATERIALS USED ON THIS CONSTRUCTION SITE MUST BE PROPERLY STORED, HANDLED AND DISPENSED FOLLOWING ANY APPLICABLE LABEL DIRECTIONS. MATERIAL SAFETY DATA SHEETS (MSDS) INFORMATION WILL BE KEPT ON SITE FOR ANY AND ALL APPLICABLE MATERIALS.

   SHALL AN ACCIDENTAL SPILL OCCUR, IMMEDIATE ACTION MUST BE UNDERTAKEN BY THE GENERAL CONTRACTOR TO CONTAIN AND REMOVE THE SPILLED MATERIAL. ALL HAZARDOUS MATERIALS MUST BE DISPOSED OF BY THE CONTRACTOR IN THE MANNER SPECIFIED BY LOCAL, STATE, AND FEDERAL REGULATIONS AND BY THE MANUFACTURER OF SUCH PRODUCTS. AS SOON AS POSSIBLE, THE SPILL WILL BE REPORTED TO THE APPROPRIATE STATE AND LOCAL AGENCIES. AS REQUIRED UNDER PROVISIONS OF THE CLEAN WATER ACT, ANY SPILL OR DISCHARGE ENTERING WATERS OF THE COMMONWEALTH MUST BE PROPERLY REPORTED. THE GENERAL CONTRACTOR MUST PREPARE A WRITTEN RECORD OF ANY SUCH SPILL AND WILL PROVIDE NOTICE TO THE OWNER WITHIN 24-HOURS OF THE OCCURRENCE OF THE SPILL.

   ANY SPILLS OF HAZARDOUS MATERIALS IN QUANTITIES IN EXCESS OF REPORTABLE QUANTITIES AS DEFINED BY EPA OR THE STATE AGENCY REGULATIONS, MUST BE IMMEDIATELY REPORTED TO THE EPA NATIONAL RESPONSE CENTER (1-800-424-8802) AND THE PENNSYLVANIA DEPARTMENT OF ENVIRONMENTAL PROTECTION (1-570-826-2511). THE REPORTABLE QUANTITY FOR PETROLEUM PRODUCTS IS FIVE (5) GALLONS. THE REPORTABLE QUANTITY FOR HAZARDOUS MATERIALS IS FIVE (5) GALLONS.

   IN ORDER TO MINIMIZE THE POTENTIAL FOR A SPILL OF HAZARDOUS MATERIALS TO COME IN CONTACT WITH STORM WATER, THE FOLLOWING STEPS MUST BE IMPLEMENTED:

   a. ALL MATERIALS WITH HAZARDOUS PROPERTIES (SUCH AS PESTICIDES, PETROLEUM PRODUCTS, FERTILIZERS, DETERGENTS, CONSTRUCTION CHEMICALS, ACIDS, PAINTS, PAINT SOLVENTS, CLEANING SOLVENTS, ADDITIVES FOR SOIL STABILIZATION, CONCRETE, CONCRETE CURING COMPOUNDS AND ADDITIVES, ETC.) MUST BE STORED IN A SECURE LOCATION, UNDER COVER, WHEN NOT IN USE.
   b. THE MINIMUM PRACTICAL QUANTITY OF ALL SUCH MATERIALS MUST BE KEPT ON THE JOB SITE AND SCHEDULED FOR DELIVERY AS CLOSE TO TIME OF USE AS PRACTICAL.
   c. A SPILL CONTROL AND CONTAINMENT KIT (CONTAINING FOR EXAMPLE, ABSORBENT SUCH AS KITTY LITTER OR SAWDUST, ACID NEUTRALIZING AGENT, BROOMS, DUST PANS, MOPS, RAGS, GLOVES, GOGGLES, PLASTIC AND METAL TRASH CONTAINERS, ETC.) MUST BE PROVED AT THE STORAGE SITE.
   d. ALL OF THE PRODUCT IN A CONTAINER MUST BE USED BEFORE THE CONTAINER IS DISPOSED OF. ALL SUCH CONTAINERS MUST BE TRIPLE RINSED WITH WATER PRIOR TO DISPOSAL. THE RINSE WATER USED IN THESE CONTAINERS MUST BE DISPOSED OF IN A MANNER IN COMPLIANCE WITH STATE AND FEDERAL REGULATIONS AND WILL NOT BE ALLOWED TO MIX WITH STORM WATER DISCHARGES.
   e. ALL PRODUCTS MUST BE STORED IN AND USED FROM THE ORIGINAL CONTAINER WITH THE ORIGINAL PRODUCT LABEL.
   f. ALL PRODUCTS MUST BE USED IN STRICT COMPLIANCE WITH INSTRUCTIONS ON THE PRODUCT LABEL.
   g. THE DISPOSAL OF EXCESS OR USED PRODUCTS MUST BE IN STRICT COMPLIANCE WITH INSTRUCTIONS ON THE PRODUCT LABEL.

File name: P:\0016\001650_0428\C3D\Plan Sets\SAN\W0016500428-DT.dwg Layout: ESN Sep 01, 2022-5:36pm sfocht

NO.	REVISION	DATE	BY

REGISTERED PROFESSIONAL ENGINEER MATTHEW J. VANASKIE PE077051 COMMONWEALTH OF PENNSYLVANIA

HRG
Herbert, Rowland & Grubic, Inc.
Engineering & Related Services
AN EMPLOYEE-OWNED COMPANY
369 East Park Drive
Harrisburg, PA 17111
(717) 564-1121
Fax (717) 564-1158
hrg@hrg-inc.com
www.hrg-inc.com

HALIFAX AREA
WATER AND SEWER AUTHORITY
203 ARMSTRONG STREET
HALIFAX, PA 17032
(717) 896-8083

EROSION AND SEDIMENTATION POLLUTION CONTROL NOTES FOR HALIFAX TWP. SANITARY SEWER EXTENSION PROJECT

HALIFAX TOWNSHIP DAUPHIN COUNTY PENNSYLVANIA

PROJ. MGR. – JJM
DESIGN– MJW
CADD– MJW
CHECKED–MJV
SCALE– AS NOTED
DATE– AUG. 2022

DRAWING NO. DT-12

PROJECT 001650.0428

STRUCTURAL NOTES:

1. ALL BUILDING COMPONENTS AND SYSTEMS SHALL CONFORM TO THE INTERNATIONAL BUILDING CODE (IBC) 2018.
2. THE CONTRACTOR SHOULD NOTE THE LOCATION OF THE STREAM WATER SURFACES THAT ARE NEAR THE SITE AND CONSIDER THE GROUND WATER LEVELS THAT WILL LIKELY BE ENCOUNTERED IN SOME OF THE EXCAVATIONS ON THIS PROJECT. THE CONTRACTOR SHOULD ALSO CONSIDER THE NATURE OF THE SOILS AT THE SITE AND THE NEED FOR SHORING OF EXCAVATIONS AND TRENCHES BASED ON THEIR DEPTHS AND THE SURROUNDING SOILS AND GROUND WATER.
3. SIDEWALKS, LANDINGS, DRIVEWAYS, ETC, THAT ABUT STRUCTURES SHALL SLOPE AWAY FROM THE STRUCTURE AT 3/16"/1'–0" UNLESS SHOWN OTHERWISE ON DRAWINGS.
4. FINISH GRADING SHALL SLOPE AWAY FROM STRUCTURES FOR A MINIMUM DISTANCE OF 10'–0" WHEREVER POSSIBLE.
5. REFER TO OTHER DISCIPLINE DRAWINGS FOR EMBEDDED ITEMS AND PENETRATIONS NOT SHOWN ON STRUCTURAL DRAWINGS.
6. OGS & #57 BACKFILL – COMPACT TO NON–MOVEMENT IN 8"MAXIMUM LIFTS, 6" MAXIMUM LIFTS WHEN USING WALK BEHIND EQUIPMENT.
7. COORDINATE ALL CONSTRUCTION THAT INTERFACES WITH EQUIPMENT OR MATERIALS THAT ARE PROVIDED BY OTHERS TO ASSURE THAT THE STRUCTURES AND EQUIPMENT/MATERIALS WILL FIT AND FUNCTION AS INTENDED. BRING ANY CONFLICTS TO THE ENGINEER'S ATTENTION FOR DIRECTION.
8. DO NOT SCALE STRUCTURAL DRAWINGS.
9. REMOVE TOP SOIL.
10. OVER EXCAVATE FOR ALL STRUCTURES TO A DEPTH AT LEAST 1'–0 BELOW EXISTING GROUND SURFACE OR TO THE BOTTOM OF BUILDING FOOTING ELEVATION, REMOVING ALL ORGANICS, FILL MATERIALS, AND ANY SOFT/WET/FROZEN SOILS. PROOF ROLL OR TAMP THE BOTTOM OF THE EXCAVATION, REMOVE SOFT MATERIALS, AND PLACE STRUCTURAL FILL OR PENNDOT 2A STRUCTURAL FILL ACCORDING TO THE PROJECT DOCUMENTS.

STRUCTURAL CONCRETE NOTES:

1. ALL CONCRETE WORK SHALL CONFORM TO BUILDING CODE REQUIREMENTS FOR STRUCTURAL CONCRETE (ACI 318), 2014 AND SPECIFICATIONS FOR STRUCTURAL CONCRETE (ACI 301)
2. ALL STRUCTURAL CONCRETE SHALL HAVE MINIMUM 28–DAY COMPRESSIVE STRENGTH OF 4,500 P.S.I. AND AIR ENTRAINMENT (EXCEPT AS NOTED) REFER TO SPECIFICATIONS FOR ADDITIONAL REQUIREMENTS. DRAWINGS MAY NOTE A LOWER STRENGTH CONCRETE FOR SPECIFIC ITEMS. ALL CONCRETE SHOWN ON THE PROJECT 'S' DRAWINGS IS TO BE STRUCTURAL CONCRETE. CONCRETE THE CONTRACTOR PLACES FOR THEIR OWN CONVENIENCE SUCH AS MUD MATS MAY BE 'LEAN CONCRETE' AT THE CHOICE OF THE CONTRACTOR.
3. MINIMUM PROTECTION OVER REINFORCING STEEL BARS EXCEPT WHERE OTHERWISE SHOWN SHALL BE AS FOLLOWS:

   NOT EXPOSED TO WEATHER, WATER–COLUMNS, BEAMS AND GIRDERS – 1–1/2"

   NOT IN CONTACT WITH GROUND: SLABS AND WALLS – 3/4"

   IN CONTACT WITH WATER: WALLS, BEAMS AND SLAB – 2"
   COLUMNS – 2–1/2"

   IN CONTACT WITH EARTH: FORMED WALLS – 2"
   SLABS AND FOOTERS – 3"
4. HOOKS, BENDS, SUPPORTS AND SPACERS SHALL BE IN ACCORDANCE WITH THE "MANUAL OF STANDARD PRACTICE FOR DETAILING REINFORCED CONCRETE STRUCTURES" (A.C.I. 315).
5. REINFORCING STEEL SHALL BE ASTM A615, GRADE 60, Fy=60,000 P.S.I.
6. WELDED STEEL WIRE FABRIC SHALL CONFORM TO ASTM A1064.
7. CHAMFER EXPOSED CONCRETE EDGES 3/4", EXCEPT AS NOTED.
8. EXPANSION JOINT MATERIAL SHALL CONFORM TO ASTM D–994, ASTM D–1751 AND ASTM D–1752.
9. REINFORCEMENT LAP SPLICES AND EMBEDMENT LENGTHS NOT OTHERWISE INDICATED SHALL CONFORM TO ACI 318–14 OR ACI 350–06.
10. ALL EXPOSED CAST–IN–PLACE CONCRETE TO HAVE A RUBBED FINISH EXCEPT WALKING SURFACES ARE TO HAVE A LIGHT BROOMED FINISH.
11. TANK AND BUILDING WALLS SHALL BE BACKFILLED WITH FREE–DRAINING GRANULAR MATERIAL (AASHTO NO. 57 OR PENNDOT NO. OGS COARSE AGGREGATE) IN ACCORDANCE WITH DETAIL SHOWN.
12. BEND OR CUT REINFORCEMENT TO CLEAR OPENINGS THROUGH WALLS OR FLOORS, AND PROVIDE ADDITIONAL PERIMETER REINFORCEMENT AS INDICATED. (REFER TO PROCESS DRAWINGS FOR SIZE AND LOCATION OF OPENINGS AND EQUIPMENT PADS.)
13. STOP WATERSTOP AND KEY IN VERTICAL WALL JOINTS 6" BELOW TOP OF WALL.
14. CONSTRUCTION JOINTS SHALL BE KEYED AND WATERSTOP PROVIDED. REINFORCEMENT SHALL BE CONTINUOUS THROUGH JOINT.

MASONRY NOTES:

1. ALL MASONRY CONSTRUCTION AND MATERIALS SHALL CONFORM TO BUILDING CODE REQUIREMENTS FOR MASONRY STRUCTURES (TMS 402), 2013 AND SPECIFICATIONS FOR MASONRY STRUCTURES (TMS 602).
2. CONCRETE MASONRY UNITS SHALL MEET A MINIMUM NET AREA COMPRESSIVE STRENGTH OF 2,000 PSI (NET AREA) FOR A F'M = 2,000 PSI
3. TYPE S PORTLAND CEMENT/LIME MORTAR CONFORMING TO ASTM C270 SHALL BE USED FOR ALL MASONRY.
4. MASONRY WALLS SHALL CONSIST OF 12" NORMAL WEIGHT, HI–R UNITS CONFORMING TO ASTM C90. UNITS SHALL HAVE INSULATION INSERTS AS PER ARCHITECTURAL DRAWINGS.
5. VERTICAL WALL REINFORCING SHALL BE LAP SPLICED A MINIMUM OF 48 BAR DIAMETERS.
6. PROVIDE HORIZONTAL JOINT REINFORCING AT 16" O.C. VERTICALLY.
7. BRACE AND SHORE WALLS AS REQUIRED UNTIL ROOF AND SHEATHING HAVE BEEN COMPLETELY INSTALLED.

DESIGN LOADS:

1. DEAD LOADS:
   ROOF: 22 PSF (INCLUDES 5 PSF FOR TRUSS SELF WEIGHT)
   MAIN FLOOR: 50 PSF
2. LIVE LOADS:
   ROOF: 20 PSF
   MAIN LEVEL FLOOR: 125 PSF
3. SNOW LOADS:
   USE 30 PSF DESIGN LOAD (NOT REDUCIBLE)
   Pg = 30 PSF
   Is = 1.1 RISK CATEGORY III
   Ce = 1.0 EXPOSURE C
   Ct = 1.2
   Pf = 27.72 PSF
4. WIND LOADS:
   120 MPH (3–SECOND GUST)
   EXPOSURE C
   Iw = 1.0 RISK CATEGORY III
5. SEISMIC LOADS:
   Ie = 1.25 RISK CATEGORY III
   Ss = 0.121 S1 = 0.042
   SITE CLASS D
   Sds = 0.129 Sd1 = 0.067
   SEISMIC DESIGN CATEGORY B
   BASIC SEISMIC FORCE RESISTING SYSTEM:
   ORDINARY REINFORCED MASONRY SHEAR WALLS
   SEISMIC RESPONSE MODIFICATION FACTOR: R=2
   ANALYSIS PROCEDURE:
   EQUIVALENT LATERAL FORCE PROCEDURE
6. DESIGN SOIL BEARING PRESSURE = 1500 PSF
7. FROST DEPTH = 36"

WOOD NOTES:

1. ALL WOOD FRAMING SHALL BE FABRICATED IN ACCORDANCE WITH THE NATIONAL DESIGN SPECIFICATION FOR WOOD CONSTRUCTION (NDS) 2018.
2. ALL CONVENTIONAL LUMBER SHALL BE NO. 1/NO. 2 SPF, WITH 19% MAXIMUM MOISTURE CONTENT OR BETTER.
   MINIMUM DESIGN VALUES SHALL BE AS FOLLOWS:
   Fb = 875 PSI
   Fc = 1,150 PSI
   Fv = 135 PSI
   E = 1,400,000 PSI
   SG = 0.42
3. ALL STEEL TIMBER FASTENERS AND CONNECTORS SHALL BE A MINIMUM OF 18 GAGE GALVANIZED STEEL WITH A RATED LOAD CAPACITY EQUAL TO OR EXCEEDING THE IMPOSED LOADING REQUIREMENTS,
4. NAILING OF ALL FRAMING SHALL BE AS PER THE IBC FASTENING SCHEDULE, TABLE 2304.10.1.
5. CUTTING AND NOTCHING OF FRAMING SHALL ONLY BE PERMITTED WITHIN THE LIMITS OF THE NDS.
6. ROOF SHEATHING SHALL BE 19/32" PLYWOOD 40/20 PS–1 APA RATED SHEATHING, EXPOSURE 1. SHEATHING SHALL BE CONTINUOUS OVER A MINIMUM OF 3 SPANS WITH GRAIN FACING PERPENDICULAR TO SUPPORTS. USE METAL PLYWOOD CLIPS (GALV.) AT 24" O.C.
7. SHEATHING SHALL BE SECURED TO THE FRAMING AND PERIMETER BLOCKING (2X MIN.) WITH 10d NAILS AND SPACED ACCORDINGLY:
   - WITHIN 8'–0" OF ROOF EDGE: 4" O.C. AT PANEL EDGES AND 6" O.C. AT INTERMEDIATE SUPPORTS.
   - BEYOND 8'–0" OF ROOF EDGE: 6" O.C. AT PANEL EDGES AND 12" O.C. AT INTERMEDIATE SUPPORTS.

PREFABRICATED WOOD TRUSS NOTES:

1. WOOD TRUSSES SHALL BE DESIGNED, FABRICATED, AND ERECTED IN ACCORDANCE WITH THE DESIGN STANDARD FOR METAL PLATE CONNECTED WOOD TRUSS CONSTRUCTION (ANSI/TPI 1–2014).
2. ALL TRUSSES SHALL BE DESIGNED FOR LOADS AS FOLLOWS, IN ADDITION TO THE SELF WEIGHT:
   A. TOP CHORD LIVE LOAD: 20 PSF
   B. TOP CHORD DEAD LOAD: 10 PSF
   C. BOTTOM CHORD DEAD LOAD: 10 PSF
   D. SNOW LOAD: PER ASCE 7–16 CHAPTER 7.
   E. LIMIT TOTAL DEFLECTION TO L/240.
   F. LIMIT SNOW/LIVE LOAD DEFLECTION TO L/360
3. TRUSSES SHALL BE DESIGNED FOR ALL APPLICABLE LOADS AS INDICATED ON THE CONSTRUCTION DOCUMENTS AND AS PER THE BUILDING CODE.
4. CONTRACTOR SHALL COORDINATE, WITH THE TRUSS MANUFACTURER, THE LOCATION OF ALL HANGING MECHANICAL EQUIPMENT AND PIPING, FOR CONCENTRATED LOADS DUE TO THEIR SUPPORTS.
5. CONTRACTOR SHALL COORDINATE, WITH THE TRUSS MANUFACTURER ALL DUCTS AND ROOF PENETRATIONS FOR PROPER LAYOUT
   AND SPACING.
6. CONTRACTOR SHALL SUBMIT SHOP DRAWINGS COMPLETE WITH ERECTION PLANS AND CALCULATIONS, ALL SIGNED AND SEALED
   BY A STRUCTURAL ENGINEER LICENSED IN THE COMMONWEALTH OF PENNSYLVANIA. SHOP DRAWINGS SHALL INDICATE AT A MINIMUM:
   A. SPAN, SLOPE, AND SPACING OF TRUSSES.
   B. BEARING WIDTHS, AND JOINT LOCATIONS.
   C. ALL APPLICABLE DESIGN LOADS, AND REACTION FORCES.
   D. CONNECTOR PLATE TYPE, GAUGE, SIZE AND LOCATION.
   E. LUMBER SIZE, SPECIES, AND GRADE FOR EACH MEMBER.
   F. BRACING LOCATION AND SIZES.
   G. DEFLECTION RATIO AND/OR MAXIMUM DEFLECTION OF LIVE AND TOTAL LOAD.
7. SHOP DRAWINGS SHALL SHOW THE SIZE AND LOCATION OF ALL BRACING, BOTH ERECTION AND PERMANENT. IN ADDITION, THE CONTRACTOR SHALL PROVIDE AND INSTALL PERMANENT BRACING IN ACCORDANCE WITH THE GUIDE TO GOOD PRACTICE FOR HANDLING, INSTALLING, RESTRAINING, AND BRACING OF METAL PLATE CONNECTED WOOD TRUSSES (BCSI).
8. CONTRACTOR IS RESPONSIBLE FOR ALL TEMPORARY TRUSS BRACING DURING CONSTRUCTION AND ERECTION. TEMPORARY BRACING SHALL REMAIN IN PLACE UNTIL ALL SHEATHING IS COMPLETELY INSTALLED.

NO.	REVISION	DATE	BY

COMMONWEALTH OF PENNSYLVANIA — REGISTERED PROFESSIONAL — JON D. SNYDER — ENGINEER — PE026074E

HRG
Herbert, Rowland & Grubic, Inc.
Engineering & Related Services
AN EMPLOYEE-OWNED COMPANY
369 East Park Drive
Harrisburg, PA 17111
(717) 564-1121
Fax (717) 564-1158
hrg@hrg-inc.com
www.hrg-inc.com

HALIFAX AREA
WATER AND SEWER AUTHORITY
203 ARMSTRONG STREET
HALIFAX, PA 17032
(717) 896-8083

LENKER ESTATES AND ROADCAP LANE PUMP STATIONS
STRUCTURAL GENERAL NOTES AND CODE INFORMATION
FOR
HALIFAX TWP. SANITARY SEWER EXTENSION PROJECT
HALIFAX TOWNSHIP DAUPHIN COUNTY PENNSYLVANIA

PROJ. MGR. –	JJM
DESIGN–	JDS
CADD–	MLW
CHECKED–	JDS
SCALE–	AS NOTED
DATE–	AUG. 2022

DRAWING NO. S-1
SHEET NO. 74 OF 109
PROJECT 001650.0428

File name: P:\001\001650.0428\CAD\Dwg Set\STRUCT\S-001650.0428.dwg Layout:S-1 Sep 01, 2022–3:57pm jwolet

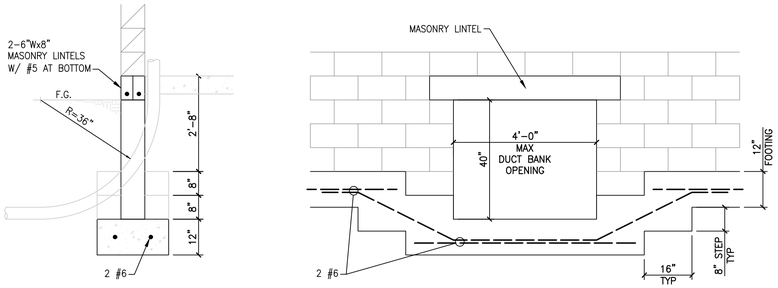

DUCT BANK PENETRATION

SCALE: 1/2" = 1'-0"

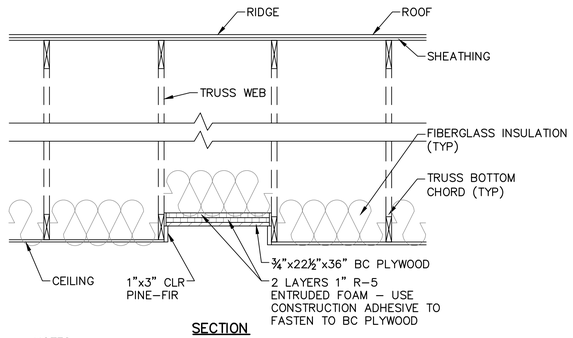

SECTION

NOTES:
1. CONTRACTOR SHALL COORDINATE LOCATION OF ACCESS HATCH WITH MECHANICAL AND ELECTRICAL CONTRACTS & ENGINEER.
2. PROVIDE AND ACCESS HATCH FOR ALL TRUSSED ATTIC SPACES OTHER THAN VACTOR TRUCK STRUCTURE.

ATTIC ACCESS HATCH DETAIL

NOT TO SCALE

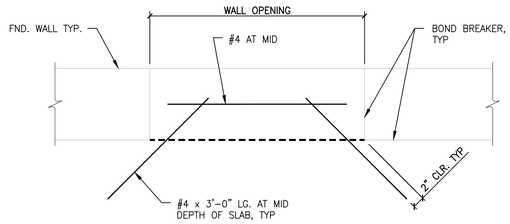

TYPICAL SLAB REINFORCEMENT AT DOOR ENTRANCE

SCALE: 1" = 1'-0"

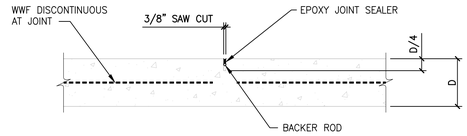

SLAB CONTROL JOINT DETAIL

SCALE: 1" = 1'-0"

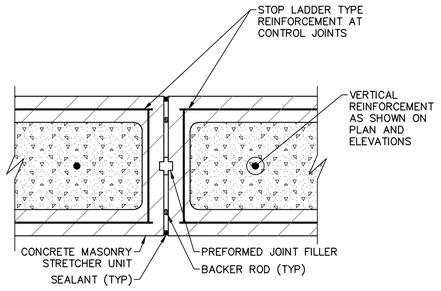

PLAN

TYPICAL BUILDING MASONRY WALL EXPANSION /CONTROL JOINT

SCALE: NOT TO SCALE

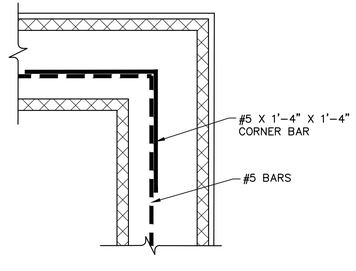

BOND BEAM CORNER DETAIL

NOT TO SCALE

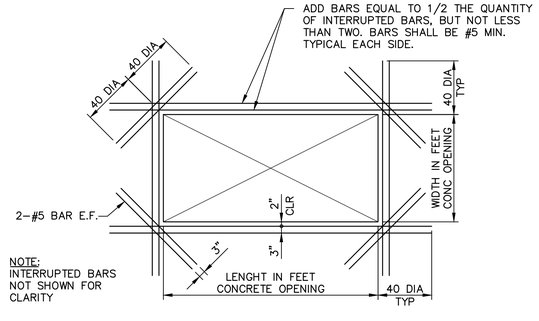

TYPICAL REINFORCING AROUND OPENINGS IN REINFORCED CONCRETE SLABS AND WALLS

NOT TO SCALE

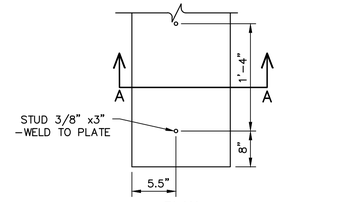

PLAN

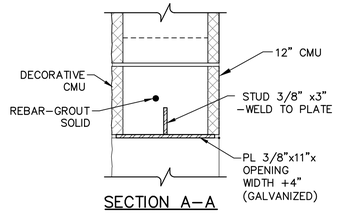

SECTION A-A

LINTEL (FIELD BUILT) DETAIL

SCALE: 1 ½" = 1'-0"

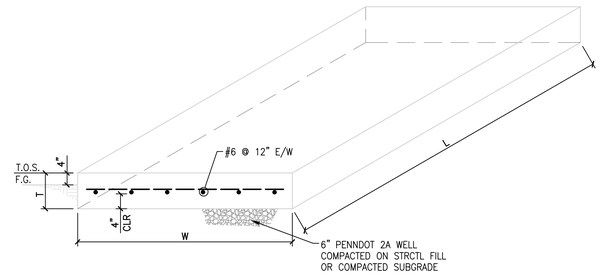

	T	W	L
CREEK ROAD	12"	5'-6"	10'-0"
LENKER	12"	6'-0"	13'-4"
ROADCAP LANE	12"	6'-0"	13'-4"

GENERATOR PADS DETAIL

SCALE: 1/2" = 1'-0"

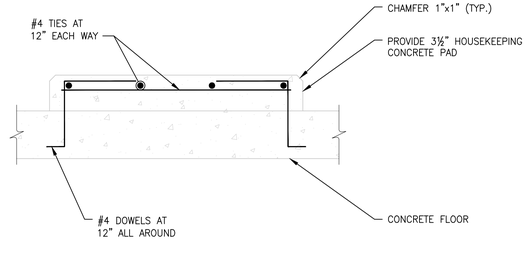

TYPICAL HOUSEKEEPING PAD DETAIL

SCALE: 1" = 1'-0"

NO.	REVISION	DATE	BY

COMMONWEALTH OF PENNSYLVANIA — REGISTERED PROFESSIONAL ENGINEER — JON D. SNYDER — PE028074E

HRG
Herbert, Rowland & Grubic, Inc.
Engineering & Related Services
AN EMPLOYEE-OWNED COMPANY
369 East Park Drive
Harrisburg, PA 17111
(717) 564-1121
Fax (717) 564-1158
hrg@hrg-inc.com
www.hrg-inc.com

HALIFAX AREA WATER AND SEWER AUTHORITY
203 ARMSTRONG STREET
HALIFAX, PA 17032
(717) 896-8083

LENKER ESTATES AND ROADCAP LANE PUMP STATIONS
STRUCTURAL DETAILS
FOR
HALIFAX TWP. SANITARY SEWER EXTENSION PROJECT
HALIFAX TOWNSHIP — DAUPHIN COUNTY — PENNSYLVANIA

PROJ. MGR. – JJM	
DESIGN– JDS	
CADD– MLW	
CHECKED–JDS	
SCALE– AS NOTED	
DATE– AUG. 2022	

DRAWING NO. **S-2**
SHEET NO. 75 OF 109
PROJECT 001650.0428

File name: P:\2001\001650.0428\CAD\Plan Set\STRCTR\S-001650.0428.dwg Layout: F-2 Sep 01, 2022 - 5:39pm bhunt

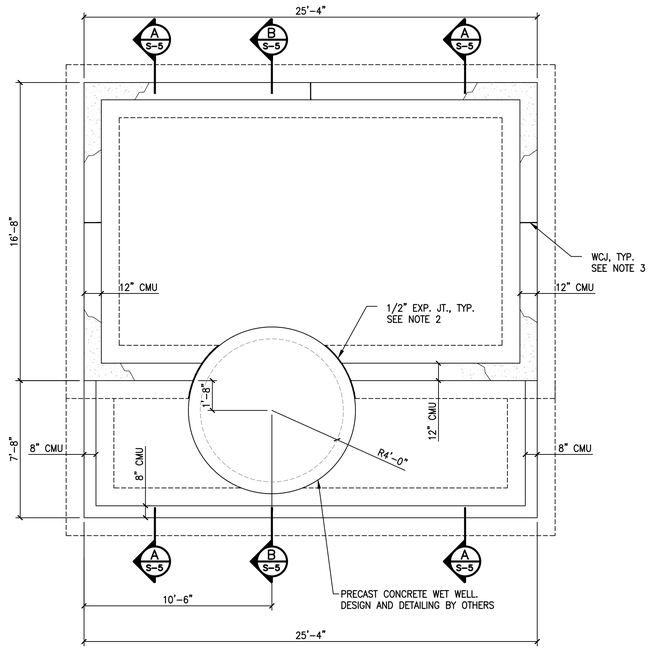

FOUNDATION PLAN

SCALE: 1/4" = 1'-0"

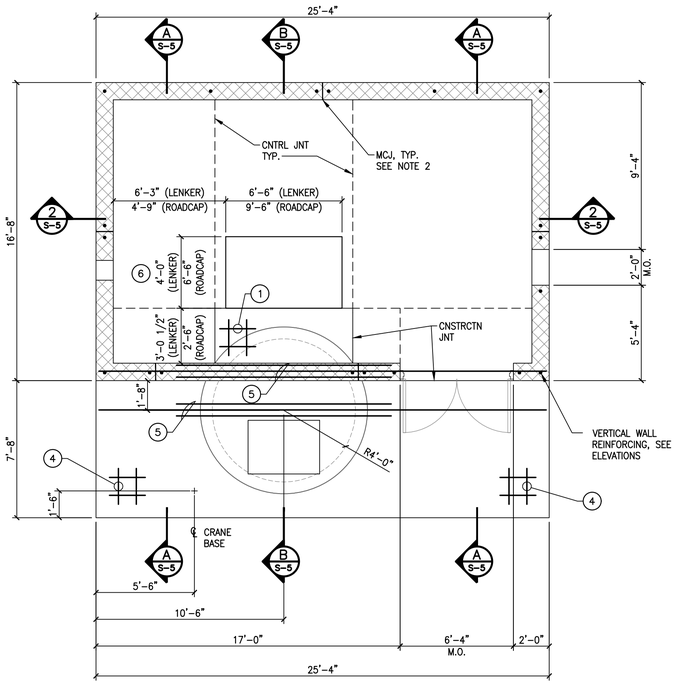

FLOOR PLAN

SCALE: 1/4" = 1'-0"

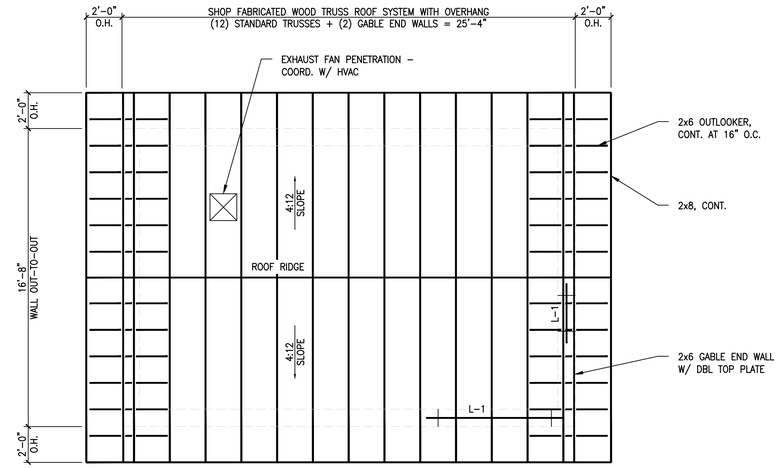

ROOF FRAMING PLAN

SCALE: 1/4" = 1'-0"

FOUNDATION PLAN NOTES:

1. USE NEOPRENE FILLER MATERIAL FOR EXPANSION.
2. WJC = WALL CONTROL JOINT, SEE DETAIL ON SHEET S-2.

FLOOR PLAN NOTES:

1. T/FLOOR EL = 567.75 (LENKER), 526.88 (ROADCAP)
2. MCJ = MASONRY CONTROL JOINT, SEE DETAIL ON SHEET S-2.
3. FOR LINTEL DETAILS SEE SHEET S-2.
4. #6@12" E/W BOT OF SLAB, #5@12" E/W/ TOP OF SLAB
5. 3-#6@4" BOT OF SLAB, 2 – 12'-0" LONG, 1 – 25'-0" LONG, SEE SECTION B-B ON SHEET S-5.
6. COORD. THESE DIMS W/ THE PUMP SUBMITTAL. DISTANCE FROM SKID TO EDGE OF RAISED SUPPORT PAD = 3" MIN.

ROOF PLAN NOTES:

1. T/CMU WALL AND TRUSS BEARING EL = 577.75 (LENKER), 536.88 (ROADCAP)
2. FOR LINTEL DETAILS SEE SHEET S-2.

2' 1' 0' 2' 4'
SCALE: 1/4"=1'-0"

NO.	REVISION	DATE	BY
1	CHANGE ORDER NO. 1	3/6/23	RSF

COMMONWEALTH OF PENNSYLVANIA – REGISTERED PROFESSIONAL – JON D. SNYDER – ENGINEER – PE028074E

HRG
Herbert, Rowland & Grubic, Inc.
Engineering & Related Services
AN EMPLOYEE-OWNED COMPANY
369 East Park Drive
Harrisburg, PA 17111
(717) 564-1121
Fax (717) 564-1158
hrg@hrg-inc.com
www.hrg-inc.com

HALIFAX AREA
WATER AND SEWER AUTHORITY
203 ARMSTRONG STREET
HALIFAX, PA 17032
(717) 896-8083

LENKER ESTATES AND ROADCAP LANE PUMP STATIONS
STRUCTURAL PLANS
FOR
HALIFAX TWP. SANITARY SEWER EXTENSION PROJECT
HALIFAX TOWNSHIP DAUPHIN COUNTY PENNSYLVANIA

PROJ. MGR. –	JJM
DESIGN–	JDS
CADD–	KSB
CHECKED–	MSF
SCALE–	AS NOTED
DATE–	AUG. 2022

DRAWING NO. S-3
SHEET NO. 76 OF 109
PROJECT 001650.0428

File name: P:\001\001650.0428\CAD\Plan Sets\STRUCTS-001650.0428.dwg Layout: S-3 Mar 28, 2023 - 2:49pm akost

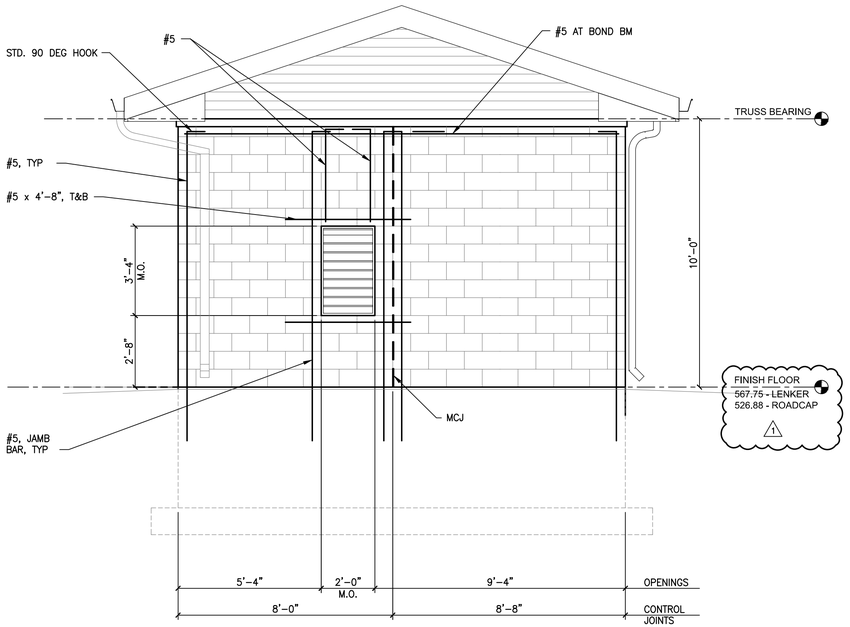

RIGHT ELEVATION

SCALE: 3/8" = 1'-0"

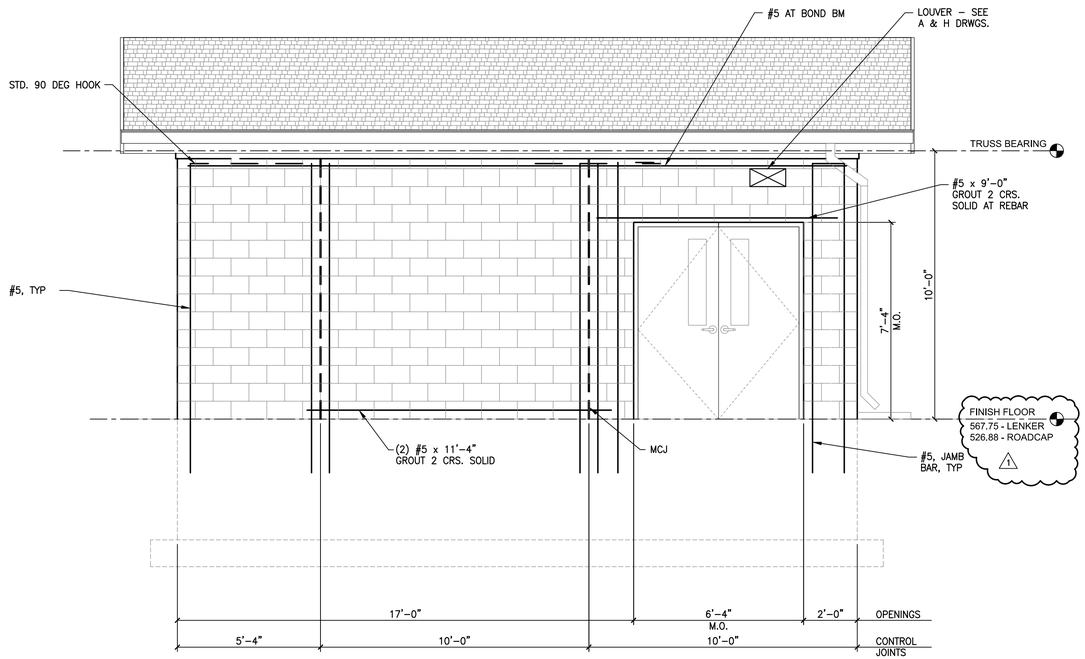

FRONT ELEVATION

SCALE: 3/8" = 1'-0"

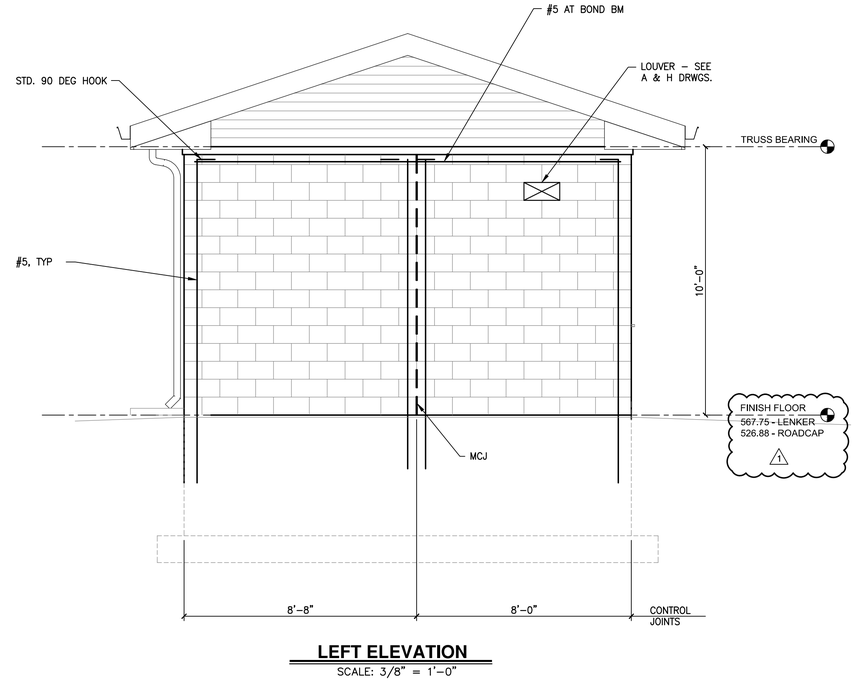

LEFT ELEVATION

SCALE: 3/8" = 1'-0"

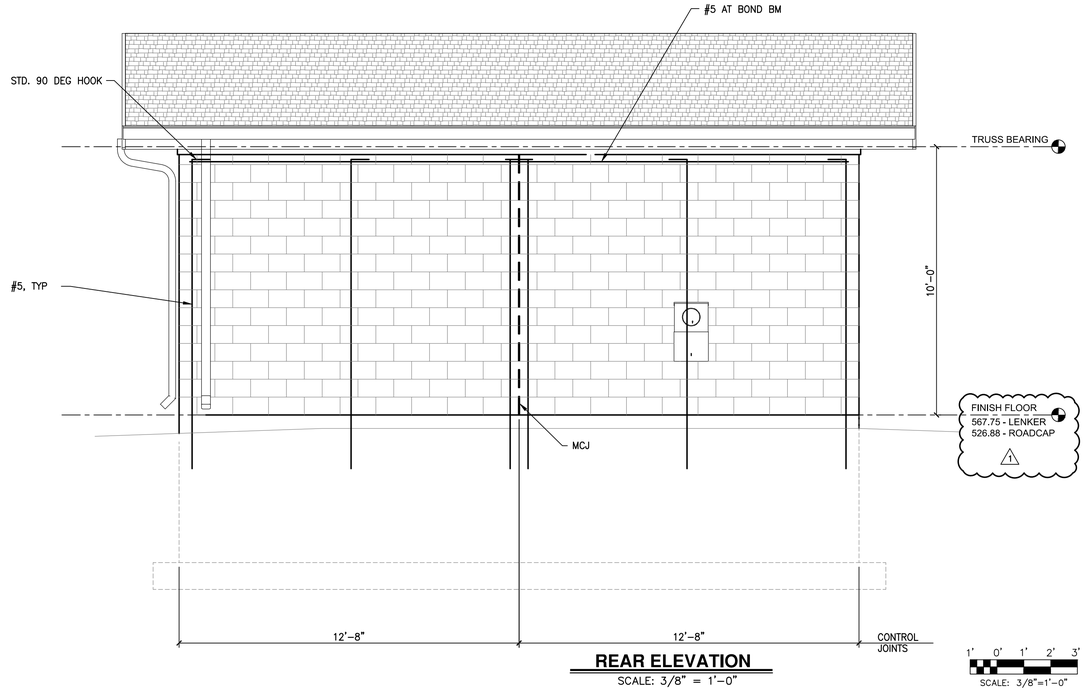

REAR ELEVATION

SCALE: 3/8" = 1'-0"

1' 0' 1' 2' 3'
SCALE: 3/8"=1'-0"

NO.	REVISION	DATE	BY
1	CHANGE ORDER NO. 1	3/6/23	RSF

COMMONWEALTH OF PENNSYLVANIA
REGISTERED PROFESSIONAL ENGINEER
JON D. SNYDER
PE028074E

HRG
Herbert, Rowland & Grubic, Inc.
Engineering & Related Services
AN EMPLOYEE-OWNED COMPANY
369 East Park Drive
Harrisburg, PA 17111
(717) 564-1121
Fax (717) 564-1158
hrg@hrg-inc.com
www.hrg-inc.com

HALIFAX AREA
WATER AND SEWER AUTHORITY
203 ARMSTRONG STREET
HALIFAX, PA 17032
(717) 896-8083

LENKER ESTATES AND ROADCAP LANE PUMP STATIONS
STRUCTURAL ELEVATIONS
FOR
HALIFAX TWP. SANITARY SEWER EXTENSION PROJECT
HALIFAX TOWNSHIP DAUPHIN COUNTY PENNSYLVANIA

PROJ. MGR. - JJM
DESIGN- JDS
CADD- KSB
CHECKED- MSF
SCALE- AS NOTED
DATE- AUG. 2022

DRAWING NO.
S-4
SHEET NO.
77 OF 109
PROJECT 001650.0428

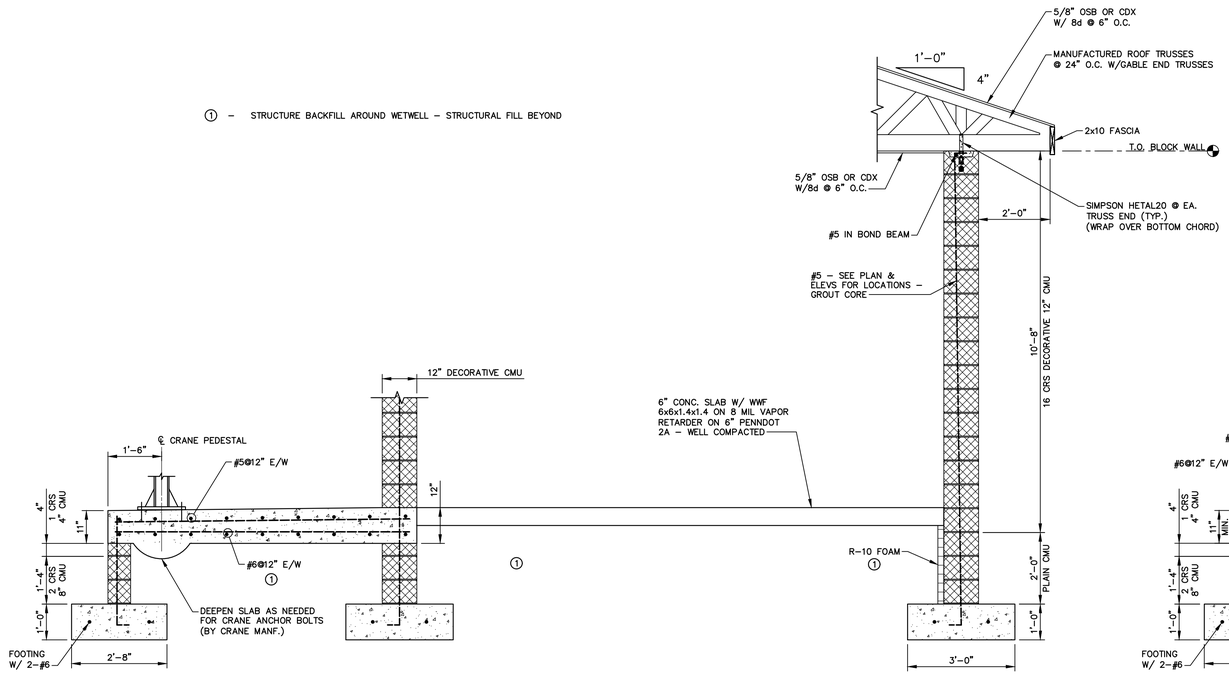

SECTION A-A

SCALE: 1/2" = 1'-0"

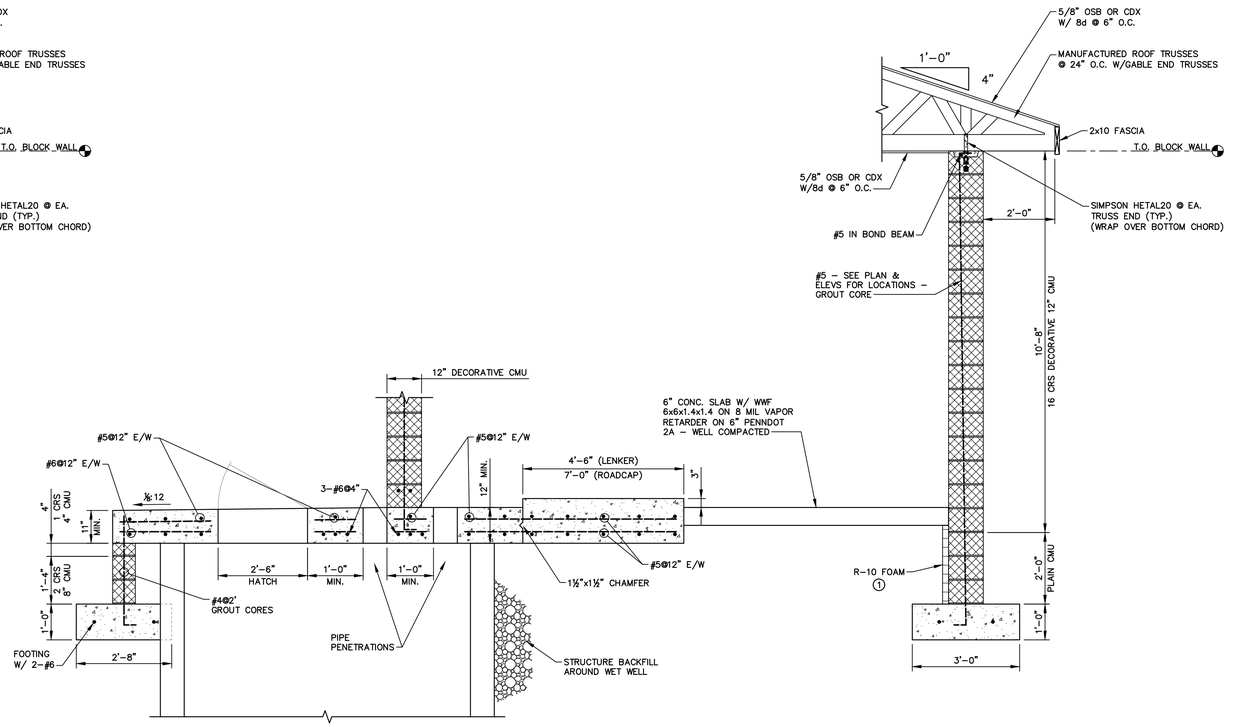

SECTION B-B

SCALE: 1/2" = 1'-0"

1' 0' 1' 2'
SCALE: 1/2"=1'-0"

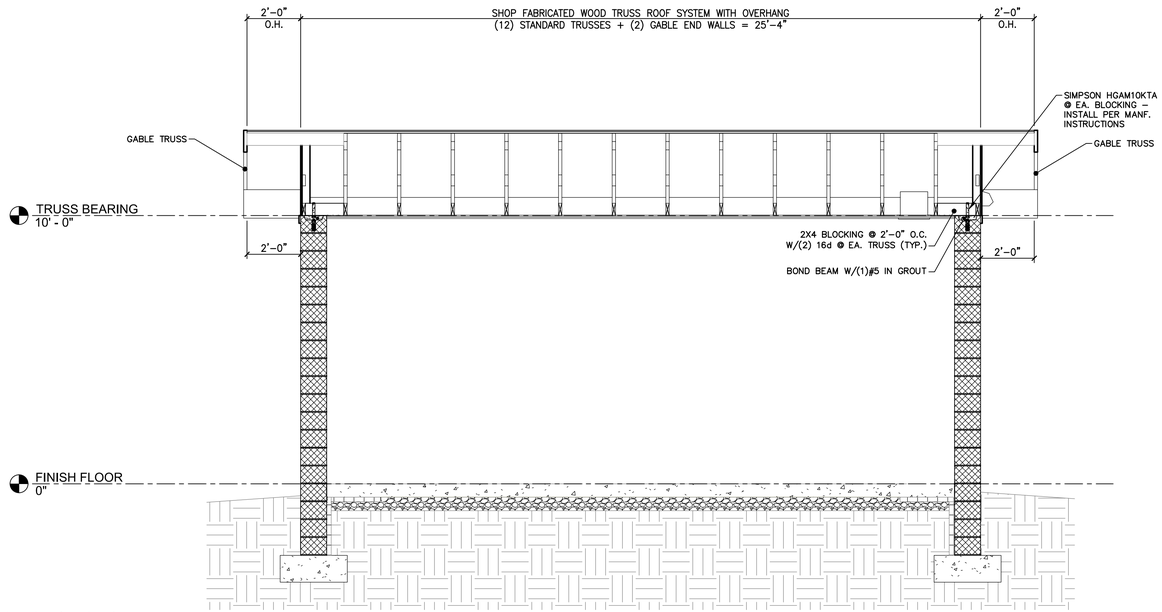

1' 0' 1' 2' 3'
SCALE: 3/8"=1'-0"

SECTION 2

SCALE: 3/8" = 1'-0"

NO.	REVISION	DATE	BY

COMMONWEALTH OF PENNSYLVANIA
REGISTERED PROFESSIONAL
JON D. SNYDER
ENGINEER
PE028074E

HRG
Herbert, Rowland & Grubic, Inc.
Engineering & Related Services
AN EMPLOYEE-OWNED COMPANY
369 East Park Drive
Harrisburg, PA 17111
(717) 564-1121
Fax (717) 564-1158
hrg@hrg-inc.com
www.hrg-inc.com

HALIFAX AREA
WATER AND SEWER AUTHORITY
203 ARMSTRONG STREET
HALIFAX, PA 17032
(717) 896-8083

LENKER ESTATES AND ROADCAP LANE PUMP STATIONS
STRUCTURAL SECTIONS
FOR
HALIFAX TWP. SANITARY SEWER EXTENSION PROJECT
HALIFAX TOWNSHIP DAUPHIN COUNTY PENNSYLVANIA

PROJ. MGR. – JJM	
DESIGN– JDS	
CADD– RSF	
CHECKED–MSF	
SCALE– AS NOTED	
DATE– AUG. 2022	

DRAWING NO.
S-5
SHEET NO.
78 OF 109
PROJECT 001650.0428

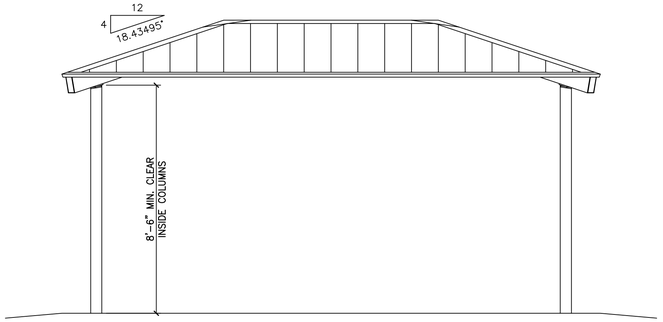

SIDE ELEVATION
SCALE: 3/8" = 1'-0"

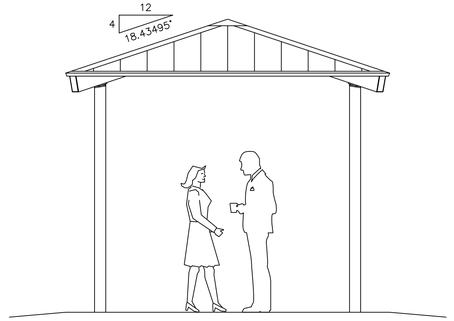

END ELEVATION
SCALE: 3/8" = 1'-0"

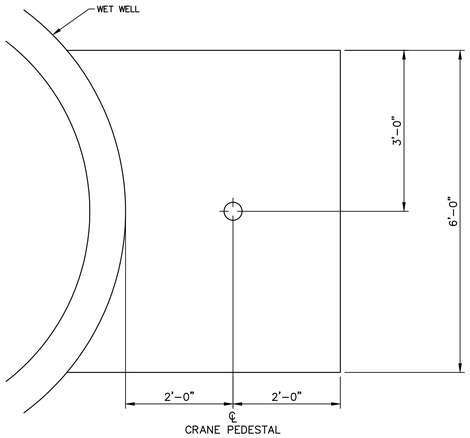

PLAN

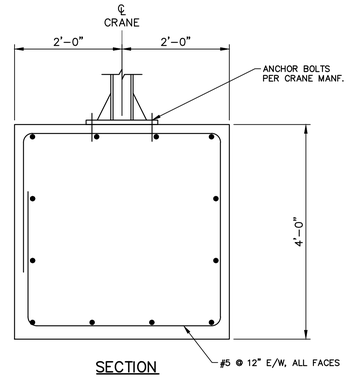

SECTION

CREEK ROAD CRANE FOUNDATION
SCALE: 3/4" = 1'-0"

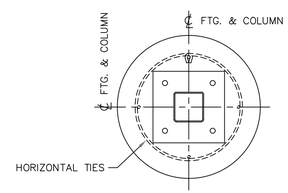

PLAN

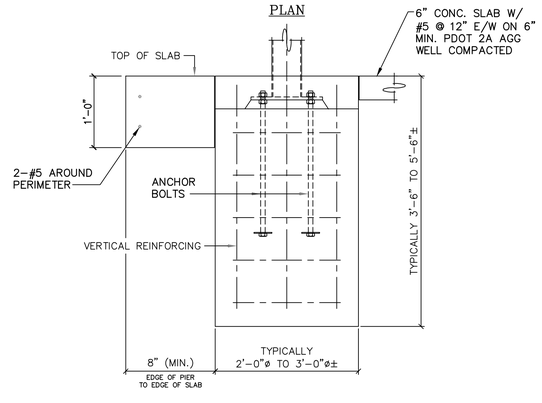

NOTE:
PIER DIMENSIONS AND DETAILS TO BE DETERMINED BY THE DELEGATED DESIGNER.

COLUMN PIER DETAIL
SCALE: 1" = 1'-0"

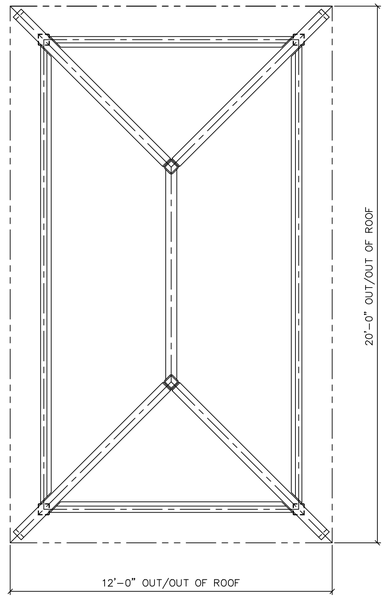

ROOF FRAMING PLAN
SCALE: 3/8" = 1'-0"

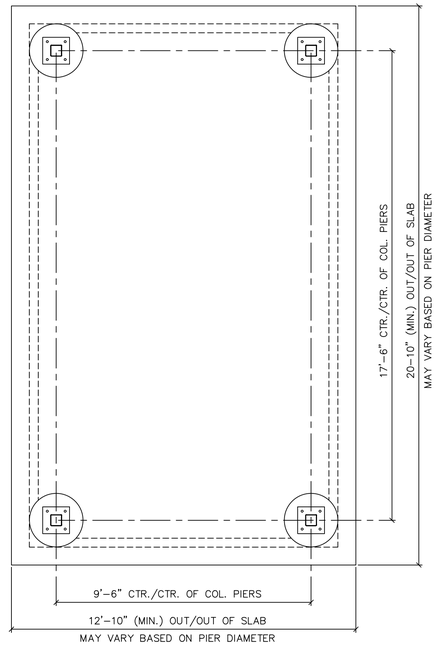

FOUNDATION PLAN
SCALE: 3/8" = 1'-0"

NO.	REVISION	DATE	BY

COMMONWEALTH OF PENNSYLVANIA
REGISTERED PROFESSIONAL
JON D. SNYDER
ENGINEER
PE028074E

HRG
Herbert, Rowland & Grubic, Inc.
Engineering & Related Services
AN EMPLOYEE-OWNED COMPANY
369 East Park Drive
Harrisburg, PA 17111
(717) 564-1121
Fax (717) 564-1158
hrg@hrg-inc.com
www.hrg-inc.com

HALIFAX AREA
WATER AND SEWER AUTHORITY
203 ARMSTRONG STREET
HALIFAX, PA 17032
(717) 896-8083

CREEK ROAD PUMP STATION
STRUCTURAL DETAILS
FOR
HALIFAX TWP. SANITARY SEWER EXTENSION PROJECT
HALIFAX TOWNSHIP DAUPHIN COUNTY PENNSYLVANIA

PROJ. MGR. – JJM	
DESIGN– JDS	
CADD– RSF	
CHECKED– JDS	
SCALE– AS NOTED	
DATE– AUG. 2022	

DRAWING NO.
S-6
SHEET NO.
79 OF 109
PROJECT 001650.0428

ARCHITECTURAL SYMBOL REFERENCE LEGEND

GRAPHIC REPRESENTATIONS SHOWN BELOW ARE FOR GENERAL INFORMATION ONLY
NOT ALL REPRESENTATIONS MAY APPLY TO THIS PROJECT

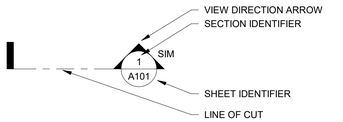

BUILDING / WALL SECTION CALL-OUT

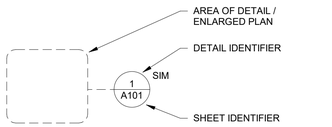

ENLARGED PLAN / DETAIL CALL-OUT

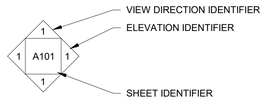

EXTERIOR ELEVATION CALL OUT

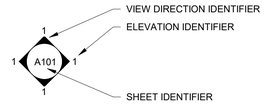

INTERIOR ELEVATION CALL OUT

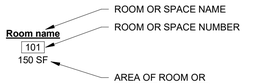

ROOM OR SPACE IDENTIFIER

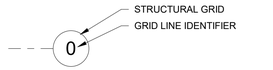

STRUCTURAL GRID IDENTIFIER

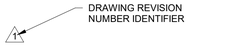

REVISION IDENTIFIER

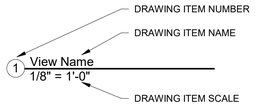

VIEW TITLE

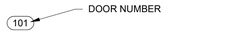

DOOR TAG

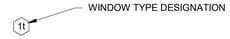

WINDOW TAG

PARTITION TYPE CALL OUT

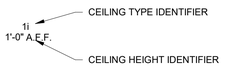

CEILING TYPE IDENTIFIER

TOILET ACCESSORY TAG

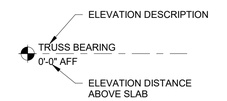

ELEVATION HEIGHT CALL OUT

KEYNOTE TAG

ROOF / FLOOR ASSEMBLY TAG

GENERAL NOTES:

1. THE GENERAL CONTRACTOR SHALL OBTAIN ALL REQUIRED PERMITS.
2. PRIOR TO THE EXECUTION OF ANY CONTRACT WORK, THE CONTRACTOR SHALL LOCATE ALL UTILITIES AND EXERCISE CAUTION DURING CONSTRUCTION ACTIVITIES SO AS NOT TO CAUSE DAMAGE TO THE SAME. THE CONTRACTOR SHALL NOTIFY THE APPROPRIATE UTILITY COMPANIES IN THE EVENT A UTILITY IS DAMAGED. THE CONTRACTOR SHALL IMMEDIATELY MAKE REPAIRS TO ANY DAMAGES UTILITY SERVICE TO THE SATISFACTION OF THE UTILITY COMPANY AND AT NO COST TO THE CONTRACT BID PRICE.
3. ALL WORK SHALL BE PERFORMED IN STRICT ACCORDANCE WITH ALL APPLICABLE FEDERAL, STATE, AND LOCAL LAWS, REGULATIONS, CODES, AND ORDINANCES. IF A PORTION OF THE WORK IS IN CONFLICT WITH APPLICABLE CODE REQUIREMENTS AND SPECIFICATIONS, THE CONTRACTOR SHALL NOTIFY THE OWNER AND OWNERS REPRESENTATIVE AS SOON AS POSSIBLE SO THAT A TIMELY RESOLUTION CAN BE INCORPORATED INTO THE WORK.
4. THE CONTRACTOR SHALL VERIFY EXISTING CONDITIONS AND CONTRACT REQUIREMENTS ON THE JOB SITE. IF EXISTING FIELD CONDITIONS DO NOT PERMIT THE INSTALLATION OF THE WORK IN ACCORDANCE WITH THE CONTRACT DOCUMENTS, THE CONTRACTOR SHALL NOTIFY THE DEPARTMENT REPRESENTATIVE AND DEPARTMENT AS SOON AS POSSIBLE SO THAT A TIMELY RESOLUTION CAN BE INCORPORATED INTO THE WORK
5. THE CONTRACTOR SHALL COORDINATE LOCATIONS AND SIZES OF ALL INTERIOR AND EXTERIOR OPENINGS / PENETRATIONS, ETC. WITH ALL OTHER TRADES. THE CONTRACTOR SHALL COORDINATE ALL SLEEVE WORK. EACH TRADE SHALL BE RESPONSIBLE FOR PROVIDING SLEEVES FOR THEIR PHASE OF THE WORK. THE CONTRACTOR SHALL VERIFY THAT ALL SLEEVES HAVE BEEN PLACED PRIOR TO CLOSING UP THE WORK AND / OR PLACING CONCRETE. ALL CONTRACTORS AND TRADES SHALL COMPLY WITH THE GENERAL CONDITIONS OF THE CONTRACT.
6. UNLESS OTHERWISE NOTED OR INDICATED ON THE DRAWINGS OR SPECIFICATIONS AS "N.I.C." OR "NOT IN CONTRACT", ALL ITEMS, MATERIALS, AND CONSTRUCTION SHOWN SHALL BE CONSIDERED PART OF THE CONTRACT. REFER TO THE TECHNICAL SPECIFICATIONS AND THE CONTRACT DOCUMENTS.

ARCHITECTURAL HATCH SYMBOL LEGEND

NOTE: GRAPHIC REPRESENTATIONS SHOWN BELOW ARE FOR GENERAL INFORMATION ONLY

- ASPHALT SHINGLE SYSTEM
- BATT INSULATION
- BRICK (PLAN)
- BRICK (ELEVATION)
- CONCRETE
- CONCRETE MASONRY UNITS (PLAN)
- CONCRETE MASONRY UNITS (ELEVATION)
- CRUSHED STONE
- EARTH
- GLASS
- HORIZONTAL LAP SIDING
- PLYWOOD
- RIGID INSULATION
- SAND / GROUT / PARGING
- WOOD FINISHED
- WOOD ROUGH

ABBREVIATIONS

ABBREVIATIONS SHOWN BELOW ARE FOR GENERAL INFORMATION ONLY - NOT ALL REPRESENTATIONS MAY APPLY TO THIS PROJECT

A	AB	ANCHOR BOLT
	ABV	ABOVE
	ACT / AT	ACOUSTICAL CEILING TILE
	ADJ	ADJACENT
	AFF	ABOVE FINISH FLOOR
	AGG	AGGREGATE
	ALUM	ALUMINUM
	ANC	ANCHOR
	ANOD	ANODIZED
	APPROX	APPROXIMATE
	AP	ACCESS PANEL
	ARCH	ARCHITECTURAL
B	BD	BOARD
	BEL	BELOW
	BET	BETWEEN
	BLDG	BUILDING
	BLK	BLOCK
	BLKG	BLOCKING
	BM	BEAM
	BOT	BOTTOM
	BO	BOTTOM OF
	BRK	BRICK
	BSMT	BASEMENT
C	CAB	CABINET
	CERT	CERTIFIED
	CD	COMPOSITION DECKING
	CFMF	COLD FORMED METAL FRAMING
	CHNL	CHANNEL
	CJ	CONTROL JOINT
	CL	CLOSET
	CLG / CLNG	CEILING
	CLR	CLEAR
	CMU	CONCRETE MASONRY UNIT
	CNT	COUNTER
	COMP	COMPOSITE
	COL	COLUMN
	CONC	CONCRETE
	CONT	CONTINUOUS
	COR	CORRUGATED
	CPT	CARPET
	CRS	COURSE(S)
	CT	CERAMIC TILE
	CW	CURTAIN WALL
D	DIA	DIAMETER
	DIM	DIMENSION
	DN	DOWN
	DR	DOOR
	DS	DOWNSPOUT
	DTL	DETAIL
	DWG(S)	DRAWING(S)
E	EA	EACH
	EIFS	EXTERIOR INSULATING FINISH SYSTEM
	EJ	EXPANSION JOINT
	EL	ELEVATION
	ELEC	ELECTRICAL
	ELEV	ELEVATOR
	EMER	EMERGENCY
	EP	EPOXY PAINT
	EPS	EXTERIOR PAINT SYSTEM
	EQ	EQUAL
	ES	EXPOSED STRUCTURE
	EWC	ELECTRIC WATER COOLER
	EXIST	EXISTING
	EXP	EXPOSED
	EXT	EXTERIOR
F	FA	FIRE ALARM
	FB	FIBER BOARD
	FD	FLOOR DRAIN
	FE	FIRE EXTINGUISHER
	FEC	FIRE EXTINGUISHER CABINET
	FF	FINISH FLOOR
	FFE	FINISH FLOOR ELEVATION
	FN	FINISH(ED)
	FLG	FLASHING
	FLR	FLOOR(ING)
	FND	FOUNDATION
	FP	FILLER PANEL
	FO	FACE OF
	FRP	FIBERGLASS REINFORCED PANEL
	F-TG	FIRE-RATED TEMPERED GLASS
	FTG	FOOTING
	FUR	FURRED(ING)
G	GA	GAUGE
	GALV	GALVANIZED
	GB	GYPSUM BOARD
	GF	GROUND FACE
	GL	GLAZED, GLAZING
	GLS	GLASS
	GHM	GALVANIZED HOLLOW METAL
	GHIM	GALVANIZED INSULATED HOLLOW METAL
H	HC	HANDICAPPED
	HCWD	HOLLOW CORE WOOD
	HDR	HEADER
	HM	HOLLOW METAL
	HR	HOUR
	HOR(IZ)	HORIZONTAL
	HT	HEIGHT
	HRDW	HARDWOOD
	HVAC	HEATING VENTILATION AIR CONDITIONING
	HWH	HOT WATER HEATER
I	ICF	INSULATED CONCRETE FORM
	ID	INDIRECT DRAIN
	INFO	INFORMATION
	INS(UL)	INSULATION
	INT	INTERIOR
	IPS	INTERIOR PAINT SYSTEM
J	JT	JOINT
K	KIT	KITCHEN
L	LAM	LAMINATE
	LF	LINEAR FEET
	LG	LONG
	LIN	LINOLEUM
	LLV	LONG LEG VERTICAL
	LTL	LINTEL
	LOUV	LOUVER
M	MANUF	MANUFACTURER
	MAS	MASONRY
	MAS DIM	MASONRY DIMENSION
	MAX	MAXIMUM
	MCJ	MASONRY CONTROL JOINT
	MDF	MEDIUM DENSITY FIBERBOARD
	MECH	MECHANICAL
	MEMB	MEMBRANE
	MFG	MANUFACTURER
	MIC	MICROPHONE
	MICRO	MICROWAVE
	MIN	MINIMUM
	MNB	MEMBRANE
	MO	MASONRY OPENING
	MR	MOISTURE RESISTANT
	MRGB	MOISTURE RESISTANT GYPSUM BOARD
	MTL	METAL
	MULL	MULLION
N	N	NORTH
	NA	NOT APPLICABLE
	NAT	NATURAL
	NIC	NOT IN CONTRACT
	NOM	NOMINAL
	NTS	NOT TO SCALE
O	OC	ON CENTER
	OH	OPPOSITE HAND
	OPP	OPPOSITE
	OSB	ORIENTED STAND BOARD
P	P	PAINT
	PBD	PARTICLE BOARD
	PERF	PERFORATED
	PF	PREFINISHED
	PL / PLAM	PLASTIC LAMINATE
	PNL	PANEL
	PNLG	PANELING
	PCT	PORCELAIN CERAMIC TILE
	PRF	POURED-IN-PLACE RUBBER FLOORING
	PT	PORCELAIN TILE
	PTN	PARTITION
	PLY / PWD	PLYWOOD
R	R	RISERS
	RA	RETURN AIR
	RAD	RADIUS
	RC	RESILIENT COVE BASE
	RCP	REFLECTED CEILING PLAN
	RD	ROOF DRAIN
	REF	REFRIGERATOR
	REQ'D	REQUIRED
	RES	RESILIENT TILE FLOORING
	REV	REVISION
	RF	RESILIENT FLOORING
	RM	ROOM
	RO	ROUGH OPENING
	RWC	RIGID WALL COVERING
S	SA	SUPPLY AIR
	SBO	SUPPLIED BY OTHER
	SCWD	SOLID CORE WOOD
	SD	SOAP DISPENSER
	SE	SITE ELEVATION
	SIM	SIMILAR
	SIP	STRUCTURAL INSULATED PANEL
	SJ	SCORE JOINT
	SL	SLOPE
	SLD	SEALED
	SLR	SEALER
	SLT	SLATE
	SOG	SLAB ON GRADE
	SOD	SECTIONAL OVERHEAD DOOR
	SS	STAINLESS STEEL
	ST	STAIN
	STL	STEEL
	STV	THIN CUT NATURAL STONE VENEER
	STRUCT	STRUCTURAL
	SUSP	SUSPENDED
T	T	TREADS
	T&G	TONGUE AND GROOVE
	TBB	TILE BACKER BOARD
	TCPT	CARPET TILE
	TF	TRANSPARENT FINISH
	TG	TEMPERED GLASS
	TIG	TEMPERED INSULATED GLASS
	TO	TOP OF
	THK	THICKNESS
	TLT	TOILET
	TYP	TYPICAL
U	UNO	UNLESS NOTED OTHERWISE
V	VAR	VARIES
	VB	VAPOR BARRIER
	VC	VINYL COVE BASE
	VCT	VINYL COMPOSITE TILE
	VERT	VERTICAL
	VEST	VESTIBULE
	VIF	VERIFY IN FIELD
	VS	VINYL SOFFIT
	VTR	VENT THRU ROOF
W	W/	WITH
	W/O	WITHOUT
	WD	WOOD
	WDWK	WOODWORK
	WF	WIDE FLANGE
	WIN	WINDOW
	WOM	WALK OFF MAT
	WSP	WOOD SHEATHING PANEL
	WWF	WELDED WIRE FABRIC

SGS ARCHITECTS-ENGINEERS, INC.
1 TYLER COURT
CARLISLE, PA 17015
(P) 717.249.4569
(F) 717.249.0284
WWW.SGSARCHITECTS.COM

NO.	REVISION	DATE	BY

09/01/2022

HRG
Herbert, Rowland & Grubic, Inc.
Engineering & Related Services
AN EMPLOYEE-OWNED COMPANY
369 East Park Drive
Harrisburg, PA 17111
(717) 564-1121
Fax (717) 564-1158
hrg@hrg-inc.com
www.hrg-inc.com

HALIFAX AREA
WATER & SEWER AUTHORITY
203 ARMSTRONG STREET
HALIFAX, PA 17032
(717) 896-8063

LENKER ESTATES & ROADCAP LANE PUMP STATIONS
ARCHITECTURAL PROJECT GENERAL NOTES, SYMBOLS, & ABBREVS
HALIFAX TOWNSHIP SEWER AUTHORITY
HALIFAX TOWNSHIP DAUPHIN COUNTY PENNSYLVANIA

PROJ. MGR. -	RAM
DESIGN-	DFS
CADD-	RAM
CHECKED-	DFS
SCALE-	As indicated
DATE-	AUG. 2022

DRAWING NO. A-01
SHEET NO. 80 OF 109
PROJECT 001650.0428

ADA DETAILS / STANDARDS - ICC/ANSI A117.1-2017

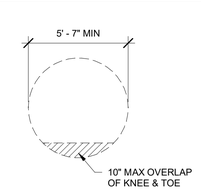

CIRCULAR TURNING SPACE (NEW CONST.)

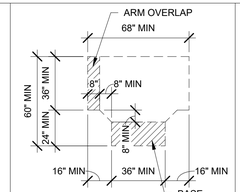

T-SHAPED TURNING SPACE (NEW CONST.)

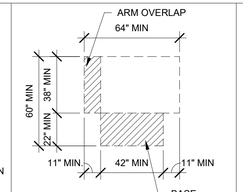

T-SHAPED TURNING SPACE (NEW CONST.)

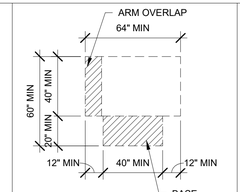

T-SHAPED TURNING SPACE (NEW CONST.)

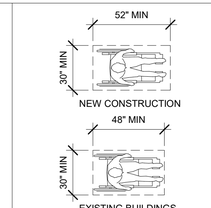

CLEAR FLOOR SPACE

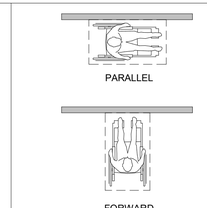

APPROACH

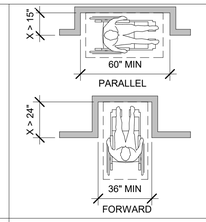

MANEUVERING CLEARANCE IN ALCOVE

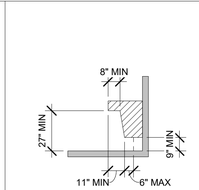

TOE / KNEE CLEARANCE - ELEVATION

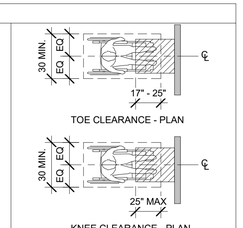

TOE / KNEE CLEARANCE - PLAN

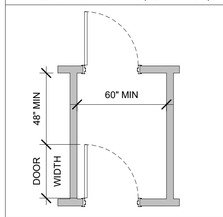

DOORS IN A SEQUENCE

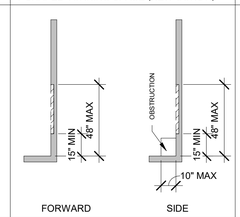

UNOBSTRUCTED REACH

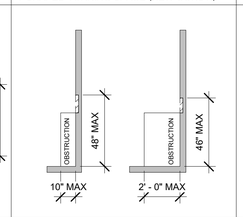

OBSTRUCTED HIGH SIDE REACH

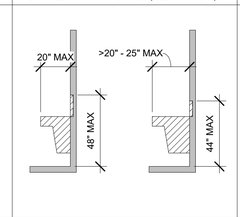

OBSTRUCTED HIGH FORWARD REACH

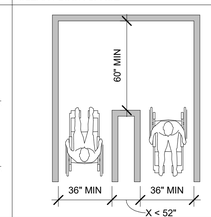

CLEAR WIDTH - 180 - OPTION 1 (NEW CONST.)

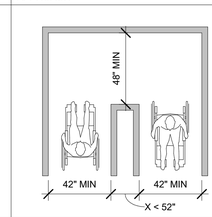

CLEAR WIDTH - 180 - OPTION 2 (NEW CONST.)

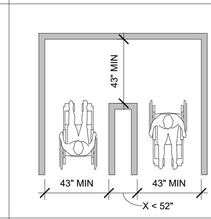

CLEAR WIDTH - 180 - OPTION 3 (NEW CONST.)

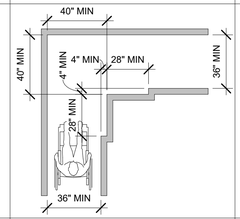

CLEAR WIDTH - 90 - OPTION 1 (NEW CONST.)

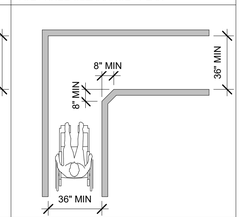

CLEAR WIDTH - 90 - OPTION 2 (NEW CONST.)

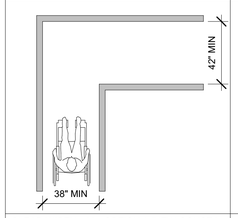

CLEAR WIDTH - 90 - OPTION 3 (NEW CONST.)

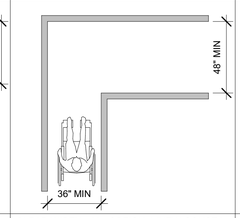

CLEAR WIDTH - 90 - OPTION 4 (NEW CONST.)

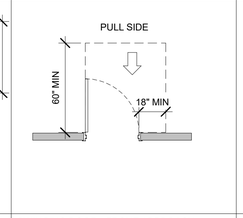

SWINGING DOOR - FRONT APPROACH

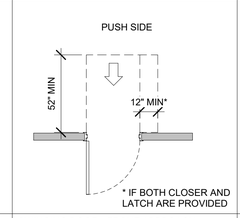

SWINGING DOOR - FRONT APPROACH

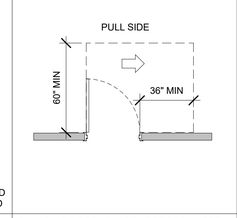

SWINGING DOOR - HINGE APPROACH - OPT 1

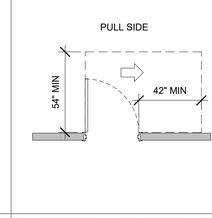

SWINGING DOOR - HINGE APPROACH - OPT 2

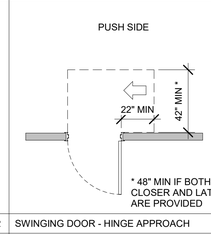

SWINGING DOOR - HINGE APPROACH

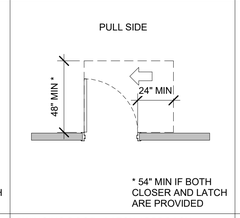

SWINGING DOOR - LATCH APPROACH

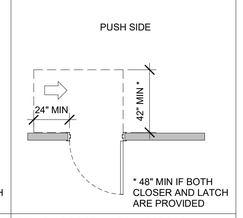

SWINGING DOOR - LATCH APPROACH

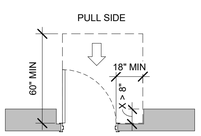

SWINGING DOOR - RECESS

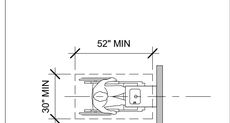

DRINKING FOUNTAIN CLEAR FLOOR SPACE

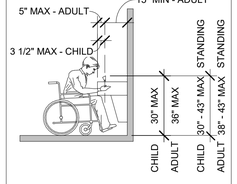

DRINKING FOUNTAIN - SPOUT LOCATION

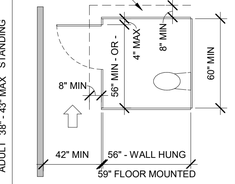

WHEEL CHAIR ACCESSIBLE TOILET COMP.

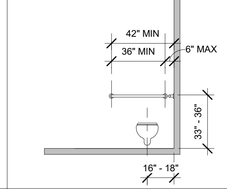

GRAB BAR - REAR WALL

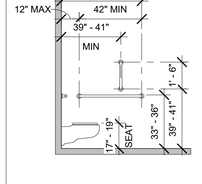

GRAB BAR - SIDE WALL

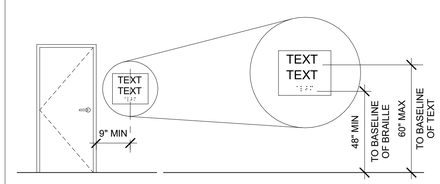

BRAILLE DOOR SIGN

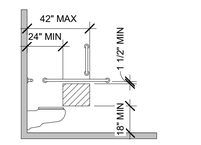

TOILET TISSUE DISPENSER

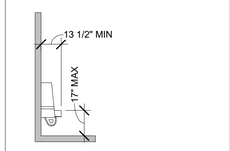

URINAL HEIGHT & DEPTH

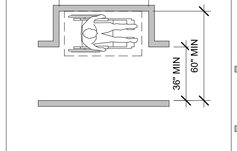

PASSING SPACE - 60x60 OPTION (NEW CONST)

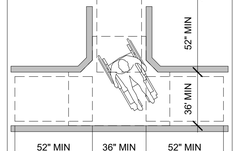

PASSING SPACE - T-TURN OPT. (NEW CONST)

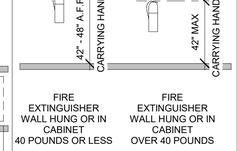

FIRE EXTINGUISHERS

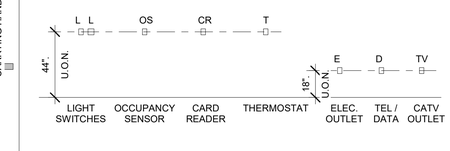

SWITCHES AND CONTROLS - MOUNTING HEIGHTS

ADA COMPLIANCE NOTES:

General:

1. The Following Notes Are Provided for Clarification and Shall Not Limit Compliance or Relieve the Sub or General Contractor from Compliance with Other Provisions of the Locally Adopted ADA Codes and Amendments.
2. ADA Compliance Shall Require All Installations to Adhere to the Provisions of the 2010 ADA Standards for Accessible Design, State & Local Amendments, and the **ICC/ANSI 117.1-2017**. Where Discrepancies Exist Between This Document or the Provisions Contained Herein the Variation Shall Be Brought to the Attention of the Architect for Clarification.
3. Modifications of the Provisions Referenced Herein Shall Be Deemed Additional Requirements for Protection and Accessibility.
4. **ICC-ANSI 606.6**
   A. There Will Be No Sharp or Abrasive Surfaces Permitted Below Lavatories, Sinks or Countertops Intended for Approach by Wheelchairs.
   B. Water Supply and Drainpipes Under Lavatories and Sinks Shall Be Insulated or Otherwise Configured to Protect Against Contact.
5. Provide All Horizontal / Vertical Bracing and Blocking for Fixtures and Bathroom Accessory Attachments. Coordinate with Owner for Owner Supplied Items.
6. Not All Details Shown May Apply.

Grab Bars:

1. **ICC-ANSI 609.5** Grab Bars and Any Wall or Other Surfaces Adjacent to Grab Bars Shall Be Free of Sharp or Abrasive Elements. Edges Shall Have A Radius of 1/8 Inch Minimum.
2. **ICC-ANSI 609.6** Grab Bars Shall Not Rotate Within Their Fittings.
3. **ICC-ANSI 609.7** Grab Bars Shall Be Installed In Any Manner That Provides A Gripping Surface At the Locations Specified In the ICC-ANSI Standard and That Does Not Obstruct the Clear Floor Space.
4. **ICC-ANSI 609.8** Allowable Stresses In Bending, Shear, and Tension Shall Not Be Exceeded for Materials Used Where the Vertical or Horizontal Force of 250 Lbs Is Applied At Any Point On the Grab Bar, Fastener Mounting Device, or Supporting Structure.
5. All Grab Bars Shall Have A Penned Finish Gripping Surface.

Waterclosets:

1. Hand Operated Flush Controls Shall Comply with **ADAAG 4.1.5**

Lavatories:

1. Hand Operated Self-Closing Faucets Shall Remain Open for 10 Seconds Min.
2. Wrap / Insulate Hot & Cold-Water Lines and Drain Pipes At All Sink Locations Where Piping Is Exposed.

Signage:

1. Shall Comply with **ICC-ANSI 703**
2. **ICC-ANSI 703.2.9** Shall Govern Mounting Height Location.
3. **ICC-ANSI 703.3.10** Shall Govern Mounting Hieght Location for signs w/ Tactile Characters. When Sufficient Space Is Available Signs Shall Be Located On the Latch Side of Single Doors and the Right Side of the Right Door for Double Doors. When Insufficient Space Is Available Signs Shall Be Located On the Nearest Adjacent Wall.
4. **ICC-ANSI 703.3.11** Signs Containing Tactile Characters Shall Have An 18 Inch Square Min. Clear Ground Space Centered on the Sign, Beyond the Arc of Any Door Swing Between the Closed Position and 45 Degree Open Position.

SGS ARCHITECTS - ENGINEERS, INC.
1 TYLER COURT
CARLISLE, PA 17015
(P) 717.249.4569
(F) 717.249.0284
WWW.SGSARCHITECTS.COM

NO.	REVISION	DATE	BY

REGISTERED ARCHITECT COMMONWEALTH OF PENNSYLVANIA
09/01/2022

HRG
Herbert, Rowland & Grubic, Inc.
Engineering & Related Services
AN EMPLOYEE-OWNED COMPANY
369 East Park Drive
Harrisburg, PA 17111
(717) 564-1121
Fax (717) 564-1158
hrg@hrg-inc.com
www.hrg-inc.com

HALIFAX AREA
WATER & SEWER AUTHORITY
203 ARMSTRONG STREET
HALIFAX, PA 17032
(717) 896-8063

LENKER ESTATES & ROADCAP LANE PUMP STATIONS
ARCHITECTURAL GENERAL - ADA DETAILS
FOR:
HALIFAX TOWNSHIP SEWER AUTHORITY
HALIFAX TOWNSHIP DAUPHIN COUNTY PENNSYLVANIA

PROJ. MGR. -	RAM
DESIGN-	DFS
CADD-	RAM
CHECKED-	DFS
SCALE-	1/4" = 1'-0"
DATE-	AUG. 2022

DRAWING NO. A-02
SHEET NO. 81 OF 109
PROJECT 001650.0428

BUILDING CODE REVIEW SUMMARY

CODE REVIEW IS THE SAME FOR BOTH PUMP STATIONS

MUNICIPALITY: Halifax Township, Dauphin County, Pennsylvania

PENNSYLVANIA UNIFORM CONSTRUCTION CODE

Building:	Buidling Code 2018 of Pennsylvania (IBC 2018 w/ amendments) Chapters 1, and 11 are Not Adopted Chapter 7, 8, & 30 - as modified Chapter 11 and Appendix E of the 2021 International Building Code
Mechanical:	Mechanical Code 2018 of Pennsylvania (IMC 2018 w/ amendments) Boiler and Unfired Pressure Law (35 P.S.$$ 1331.1-1331.19) and Chapter 3
Plumbing:	Plumbing Code 2018 of Pennsylvania (IPC 2018 w/ amendments) Section 403.4 of the 2021 International Plumbing Code Section 403.5 of the 2021 International Plumbing Code Section 404 of the 2021 International Plumbing Code Section 405.3.1 of the 2021 International Plumbing Code
Electrical:	2015 International Electrical Code NFPA 70-2014, National Electric Code.
Fuel:	Fuel Gas Code 2018 of Pennsylvania (IFGC 2018 w/ amendments)
Fire:	Fire Code 2018 of Pennsylvania (IFC 2018 w/ amendments)
Energy:	Energy Conservation code 2018 of Pennsylvania (IECC 2018 w/ amendments)
Accessibility:	Americans with Disability Act Accessibility Guidelines for Buildings and Facilities - ICC A117.1 - 2017

CHAPTER 3: USE AND OCCUPANCY CLASSIFICATION
Use Group: **U** **Utility**

CHAPTER 5: GENERAL HEIGHTS AND AREA

Table 504.3 Maximum Building Height

Use Group U Non-Sprinkled Type VB 40 feet
PROPOSED **15 feet**

Table 504.4 Allowable number of stories above grade plane

Use Group U Non-Sprinkled Type VB 1
PROPOSED **1**

Table 506.2 Allowable area factor

Use Group U Non-Sprinkled Type VB 5,500 sf
PROPOSED **423 sf**

CHAPTER 6: TYPE OF CONSTRUCTION
Proposed Construction Type: VB Combustible
Table 601: Fire resistance Rating Requirements For Building Elements

Primary Structural Frame:	0
Bearing Walls – Exterior:	0
Bearing Walls – Interior:	0
Non-bearing Walls – Exterior:	0
Non-bearing Walls – Interior:	0
Floor Construction and Secondary Members:	0
Roof Construction and Secondary Members:	0

Table 602: Fire-resistance rating requirement for exterior walls based on fire separation distance

X<5	1 hour
5 < X <10	1 hour
10< X <30	0
X > 30	0

Distance to nearest adjacent structure is greater than 30 feet
No fire-resistance rating required

CHAPTER 7: FIRE AND SMOKE PROTECTION FEATURES

Section 705	Exterior Walls	not applicable
Section 706	Fire Walls	not applicable
Section 707	Fire Barriers	not applicable
Section 708	Fire Partitions	not applicable
Section 709	Smoke Barriers	not applicable
Section 710	Smoke Partitions	not applicable
Section 711	Floor and Roof Assemblies	not applicable
Section 712	Vertical Openings	not applicable
Section 713	Shaft Enclosures	not applicable
Section 714	Penetrations	not applicable
Section 715	Fire-Resistant Joint Systems	not applicable
Section 716	Opening Protectives	not applicable
Section 717	Ducts and Air Transfer Openings	not applicable
Section 718	Concealed Spaces	not applicable

Section 718.2 Fireblocking
In combustible construction, fireblocking shall be installed to cut off concealed draft openings (both vertical and horizontal) and shall form an effective barrier between floors, between a top story and a roof or attic space. Fireblocking shall be installed in the locations specified in Sections 718.2.2 through 718.2.7.

CMU Walls used - Not applicable

Section 718.4 Draftstopping in Attics
Draftstopping shall be installed to subdivide attic spaces where required by Section 708.4.2. In other than Group R, draftstopping shall be installed to subdivide combustible attic spaces and combustible concealed roof spaces such that any horizontal area does not exceed 3,000 square feet.
Ventilation of concealed roof spaces shall be maintained in accordance with Section 1202.2.1.

Attic space is less than 3,000 sf - Not applicable

CHAPTER 8: INTERIOR FINISHES

Section 803.1.2: Interior wall and ceiling finish materials
Interior wall and ceiling finish materials shall be classified in accordance with ASTM E84 of UL 723

Class A	=	Flame spread index	0-25	Smoke Developed index 0-450
Class B	=	Flame spread index	26-75	Smoke Developed index 0-450
Class C	=	Flame spread index	76-200	Smoke Developed index 0-450

Table 803.13: Interior Wall and Ceiling Finish requirements by Occupancy

U classification	Non-Sprinklered
Exit Enclosures and Exitways:	No Restrictions
Corridors:	No Restrictions
Rooms and Enclosed Spaces	No Restrictions

Section 804.2: Interior Floor finish classification
Interior floor finish and floor covering materials required by section 804.4.2 to be of Class I or II materials shall be classified in accordance with NFPA 253.
Class I - 0.45 watts/cm^2 or greater
Class II - 0.22 watts/cm^2 or greater

Section 804.4.2: Interior floor finish requirements - Minimun critical radiant flux
U classification - No Restrictions

CHAPTER 9: FIRE PROTECTION SYSTEMS
Section 903.2 - Automatic Sprinkler System - Group U

NFPA 13 Sprinkler system is <u>NOT</u> required and <u>NOT</u> provided

Section 906.1: Portable fire extinguishers

Portable fire extinguishers are <u>NOT</u> required but <u>ARE</u> provided

Table 906.3 (1): Portable Fire Extinguishers (Class A fires)

	Ordinary (moderate) Hazard
Minimum Rated Single Extinquisher	2-A
Maximum floor area per unit of A	1,500 sf
Maximum floor area per extingisher	11,250 sf
Maximum distance of travel to extinguisher	75 feet

Section 907.2: Manual Fire alarm - Group U

Manual Fire Alarm System is NOT required and NOT Provided

Section 918.1: Emergency Responder Radio Coverage
Emergency responder radio coverage shall be provided in all new buildings in accordance with Section 510 of the International Fire Code

CHAPTER 10: MEANS OF EGRESS
Table 1004.5: Occupancy Load

Room Name	Sq. Ft./Sq. Ft. per Occupant	Occupancy
Water Treatment Building	422/300	2
Total		2

Building is NOT typically occupied. Only occupied for periodic inspection and maintenance

Section 1005: Egress Width

Stairs	0.3"/ occupant	Not Applicable
Stair width required:		N/A
Stair width provided:		N/A
Egress Width Other:	0.2"/ occupant	2 x 0.2"
Egress Width Required:		0.4"
Egress Width Provided:	1 x 68"	68"

Table 1006.2.1: Spaces with one Exit

Occupancy	Max. Occ. Load.	Max Common path of travel
U	49	75 feet
Actual	**2**	**35 feet**

Table 1006.3.3(2): Stories with one exit

Story	Occupancy	Max Occupant Load	Max travel
First Story above / below grade plane	U	49	75 feet
Actual		**2**	**35 feet**

Section 1020: Corridors
Table 1020.1: Corridor Fire Resistance Rating

Occupancy	Occupant load	Requried Fire- Resistance Rating - Non-Sprinklered
U	Greater than 30	1

<u>Occupant load is less than 30 - No Fire-Resistance Rating Required</u>

CHAPTER 8: INTERIOR FINISHES

Section 803.1.2: Interior wall and ceiling finish materials
Interior wall and ceiling finish materials shall be classified in accordance with ASTM E84 or UL 723. Such interior finish materials shall be grouped in the following classes in accordance with their flame spread and smoke-developed indices.

Class A	=	Flame spread index	0-25	Smoke Developed index 0-450
Class B	=	Flame spread index	26-75	Smoke Developed index 0-450
Class C	=	Flame spread index	76-200	Smoke Developed index 0-450

Section 803.2 Thickness Exemption
Materials having a thickness less than 0.036 inch (0.9 mm) applied directly to the surface of walls or ceilings shall not be required to be tested.

Table 803.13: Interior Finish Requirements Based on Occupancy

M classification Sprinklered	
Exit Enclosures and Exitways:	B
Corridors:	C
Rooms and Enclosed Spaces	C

Section 804.2: Interior Floor finish classification
Interior floor finish and floor covering materials required by section 804.4.2 to be of Class I or II materials shall be classified in accordance with NFPA 253.
Class I - 0.45 watts/cm^2 or greater
Class II - 0.22 watts/cm^2 or greater

Section 804.4.2: Interior floor finish requirements - Minimun critical radiant flux
In all occupancies, interior floor finish and floor covering materials in enclosures for stairways anr ramps, exit passageways, corridors and rooms or spaces not separated from corridor partitiojns exgtending from the floor to the underside of the ceiling shall withstand a minimum critical radiant flux.
The critical radiant flux ***shall be not less than Class II*** in Group M

Exception: Where a building is equipped throughout with an automatic sprinkler system in accordance with Section 903.3.1.1 or 903.3.1.2, Class II materials are permitted in any area where Class I materials are required, and materials complying with DOC FF-1 "pill test" (CPSC 16 CFR Part 1630) or with ASTM D2859 are permitted in any area where Class II materials are required.

CHAPTER 29 PLUMBING SYSTEMS
Table 2902.1 Minimum Number of Required Plumbing Fixtures

Total Occupants 2

Water Closets U Use Group - No Requirements	One (1) Provided
Lavatories U Use Group - No Requirements	One (1) Provided
Bathtubs/Showers U Use Group - No Requirements	NONE Provided
Drinking Fountains U Use Group - No Requirements	NONE Provided
Service Sinks U Use Group - No Requirements	One (1) Provided

2018 INTERNATIONAL ENERGY CONSERVATION CODE

Location: Dauphin County, Pennsylvania
Climate Zone 5A

Chapter 4 COMMERCIAL ENERGY EFFICIENCY

Table C402.1.3 & C402.1.4 - Opaque Thermal Envelope Insulation Component Minimum Requirements

Assembly	Required	Provided
Roof (Attic & Other)	R-38 min or U-0.027 max	R-38 min
Walls (Mass)	R-11.4 ci or U-0.090 max	U-0.090 max
Slab on Grade (Un-heated)	R-10 for 24" below or F-0.54 max	R-10 - 24" under slab and down To top of footing
Opaque Doors (non-swing)	R-4.75 or U-0.37 max	R-4.75 min

TABLE C402.3 - Minimum Roof Reflectance And Emittance Options
Three year aged solar reflectance of 0.55 and 3 year aged thermal emittance of 0.75
Three year aged solar reflectance index of 64

TABLE C402.4 - Building Envelope Fenestration Maximum U-Factor And Shgc Requirements

Assembly	Required	Minimum Provided
VERTICAL FENESTRATION		
Fixed Fenestration	U-0.38	Meet Or Exceed
Operable Fenestration	U-0.45	Not Applicable
Entrance Doors	U-0.77	Meet Or Exceed
SHGC		
Orientation	SEW N	
Pf<0.25	U-0.38 U-0.51	Meet Or Exceed
0.25<Pf<0.5	U-0.46 U-0.56	Meet Or Exceed
Pf>0.5	U-0.61 U-0.61	Meet Or Exceed
Skylights		
U-Factor	0.50	Not Applicable
SHGC	0.40	Not Applicable

Section C402.4.1 Maximum Area
The vertical fenestration area (not including opaque doors and opaque spandrel panels) shall not be greater than 30 percent of the gross above-grade wall area.....

Actual - 0%

C402.5 Air Leakage—Thermal Envelope (Mandatory)

The thermal envelope of buildings shall comply with Sections C402.5.1 through C402.5.8, or the building thermal envelope shall be tested in accordance with ASTM E 779 at a pressure differential of 0.3 inch water gauge (75 Pa) or an equivalent method approved by the code official and deemed to comply with the provisions of this section when the tested air leakage rate of the building thermal envelope is not greater than 0.40 cfm/ft2 (2.0 L/s • m2). Where compliance is based on such testing, the building shall also comply with Sections C402.5.5, C402.5.6 and C402.5.7.

C402.5.5 Air Intakes, Exhaust Openings, Stairways and Shafts

Stairway enclosures, elevator shaft vents and other outdoor air intakes and exhaust openings integral to the building envelope shall be provided with dampers in accordance with Section C403.7.7.

C402.5.6 Loading Dock Weatherseals

NOT APPLICABLE

C402.5.7 Vestibules

Building entrances shall be protected with an enclosed vestibule, with all doors opening into and out of the vestibule equipped with self-closing devices. Vestibules shall be designed so that in passing through the vestibule it is not necessary for the interior and exterior doors to open at the same time. The installation of one or more revolving doors in the building entrance shall not eliminate the requirement that a vestibule be provided on any doors adjacent to revolving doors.
<u>Exception 4</u>. Doors that open directly from a spec less than 3,000 sf in area

Vestibule <u>NOT</u> Required and <u>NOT</u> provided

Table C402.5.2 - Maximum air leakage rate for fenestrations

Fenstration	Assembly Max. rate (cfm/ft2)	Test Procedure
Windows	0.20	AAMA/WDMA/CSA101/I.S.2/A440 or NFRC 400
Swinging Doors	0.20	AAMA/WDMA/CSA 101/I.S.2/A440 or NFRC 400

<u>USE GROUP LEGEND</u>

U - UTILITY

LIFE SAFETY LEGEND

- - - -	EGRESS TRAVEL PATH
(X)	INDICATES THE NUMBER OF OCCUPANTS
▼	EGRESS EXIT
●	2A:10-B:C. 5-LB MULTI-PURPOSE FIRE EXTINGUISHER - 75'-0" MAX TRAVEL DISTANCE

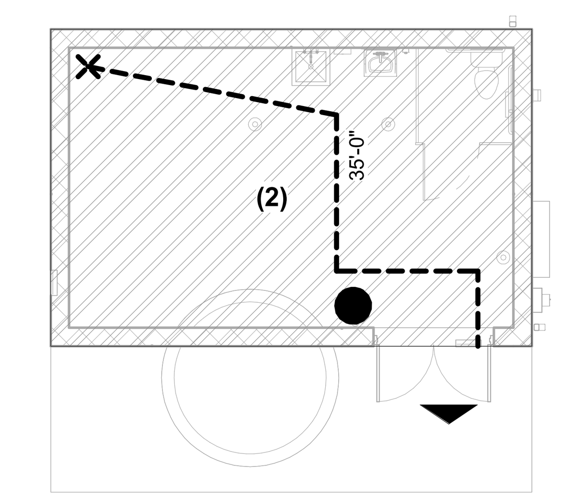

1 LENKER ESTATES - LIFE SAFETY PLAN
1/8" = 1'-0"

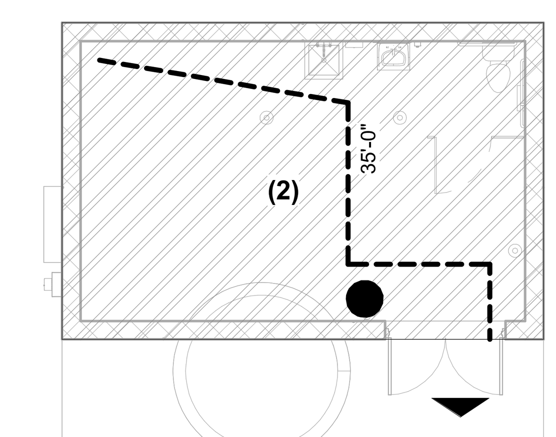

2 ROADCAP LANE - LIFE SAFETY PLAN
1/8" = 1'-0"

SGS
ARCHITECTS - ENGINEERS, INC.
1 TYLER COURT
CARLISLE, PA 17015
(P) 717.249.4569
(F) 717.249.0284
WWW.SGSARCHITECTS.COM

NO.	REVISION	DATE	BY

REGISTERED ARCHITECT PENNSYLVANIA DENNIS FRANKLIN SOWERS RA-00790-X
09/01/2022

HRG
Herbert, Rowland & Grubic, Inc.
Engineering & Related Services
AN EMPLOYEE-OWNED COMPANY
369 East Park Drive
Harrisburg, PA 17111
(717) 564-1121
Fax (717) 564-1158
hrg@hrg-inc.com
www.hrg-inc.com

HALIFAX AREA
WATER & SEWER AUTHORITY
203 ARMSTRONG STREET
HALIFAX, PA 17032
(717) 896-8063

LENKER ESTATES & ROADCAP LANE PUMP STATIONS

LIFE SAFETY PLAN AND CODE ANALYSIS

FOR:

HALIFAX TOWNSHIP SEWER AUTHORITY

HALIFAX TOWNSHIP **DAUPHIN COUNTY** **PENNSYLVANIA**

PROJ. MGR. -	RAM
DESIGN-	DFS
CADD-	RAM
CHECKED-	DFS
SCALE-	As indicated
DATE-	AUG. 2022

DRAWING NO.
A-03

PROJECT 001650.0428

WALL ASSEMBLIES

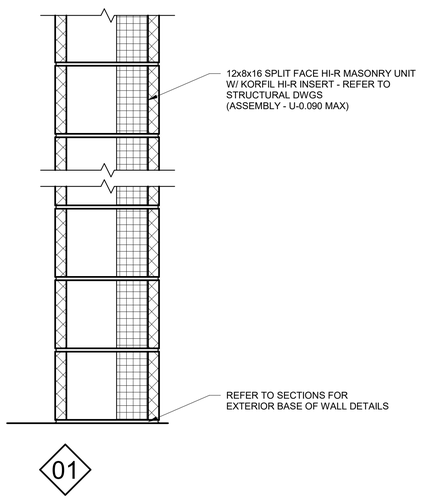

ROOF / CEILING ASSEMBLIES

RC-A

LOAD BEARING
FIRE RATING: NONE

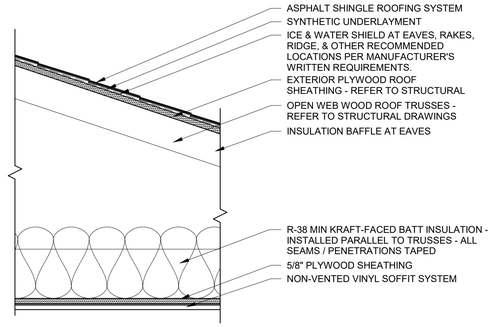

FLOOR ASSEMBLIES

F-A

LOAD BEARING
FIRE RATING: NONE

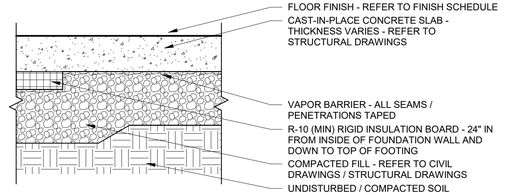

GENERAL NOTES:

1. CONTRACTOR TO VERIFY AND INSTALL ALL COMPONENTS PER LISTED ASSEMBLY.

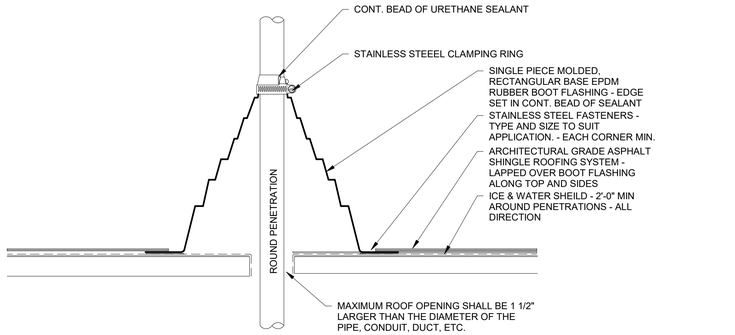

1 PIPE PENETRATION DETAIL
1" = 1'-0"

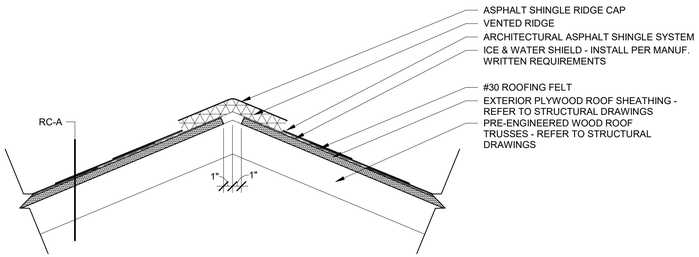

2 RIDGE DETAIL
1 1/2" = 1'-0"

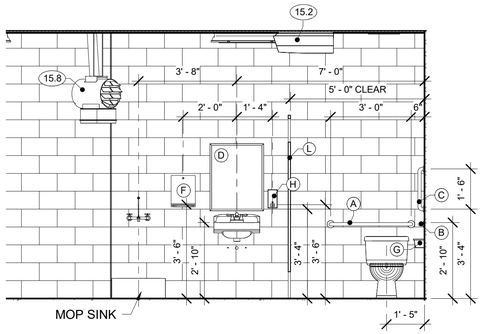

3 PLUMBING WALL ELEVATION - a
3/8" = 1'-0"

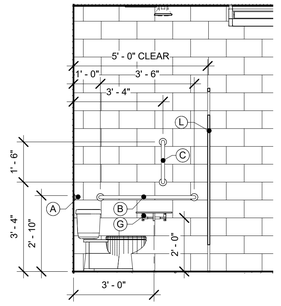

4 PLUMBING WALL ELEVATION - b
3/8" = 1'-0"

GENERAL BATHROOM NOTES

1. ALL DIMENSIONS ON ELEVATIONS ARE CLEAR TO FACE OF WALL / EQUIPMENT OR TO CENTERLINE OF EQUIPMENT, UNLESS OTHERWISE NOTED
2. ALL EXPOSED PIPING UNDER SINKS MUST BE INSULATED / PROTECTED
3. CAULK BETWEEN ALL DIS-SIMILAR MATERIALS
4. REFER TO ELECTRICAL DRAWING FOR LIGHT FIXTURE INFORMATION & MOUNTING HEIGHTS
5. ALL MIRRORS ARE TO BE INSTALLED WITH THE BOTTOM OF THE REFLECTING SURFACE AT 40" A.F.F. (NOT THE MIRROR ASSEMBLY)

TOILET ACCESSORY SCHEDULE

A	GRAB BAR: 36" LONG STAINLESS STEEL
B	GRAB BAR: 42" LONG STAINLESS STEEL
C	VERTICAL GRAB BAR: 18" HIGH STAINLESS STEEL
D	24" x 30" MIRROR WITH STAINLESS STEEL FRAME
E	NOT USED
F	SURFACE MOUNTED PAPER TOWEL DISPENSER
G	SURFACE MOUNTED DOUBLE ROLL TOILET PAPER DISPENSER
H	SURFACE MOUNTED SOAP DISPENSER - 40 OZ
L	FLOOR MOUNTED OVERHEAD BRACED TOILET PARTITION

KEYNOTE LEGEND

KEY	DESCRIPTION
15.2	MINI-SPLIT INDOOR UNIT - REFER TO MECHANICAL DRAWINGS FOR ADDITIONAL INFORMATION
15.8	CEILING MOUNTED UNIT HEATER - REFER TO MECHANICAL DRAWINGS FOR ADDITIONAL INFORMATION

SGS ARCHITECTS - ENGINEERS, INC.
1 TYLER COURT
CARLISLE, PA 17015
(P) 717.249.4569
(F) 717.249.0284
WWW.SGSARCHITECTS.COM

NO.	REVISION	DATE	BY

09/01/2022

HRG
Herbert, Rowland & Grubic, Inc.
Engineering & Related Services
AN EMPLOYEE-OWNED COMPANY
369 East Park Drive
Harrisburg, PA 17111
(717) 564-1121
Fax (717) 564-1158
hrg@hrg-inc.com
www.hrg-inc.com

HALIFAX AREA
WATER & SEWER AUTHORITY
203 ARMSTRONG STREET
HALIFAX, PA 17032
(717) 896-8063

LENKER ESTATES & ROADCAP LANE PUMP STATIONS

ASSEMBLIES & MISC. DETAILS

FOR:

HALIFAX TOWNSHIP SEWER AUTHORITY

HALIFAX TOWNSHIP DAUPHIN COUNTY PENNSYLVANIA

PROJ. MGR. -	RAM
DESIGN-	DFS
CADD-	RAM
CHECKED-	DFS
SCALE-	As indicated
DATE-	AUG. 2022

DRAWING NO.
A-04
SHEET NO.
83 OF 109
PROJECT 001650.0428

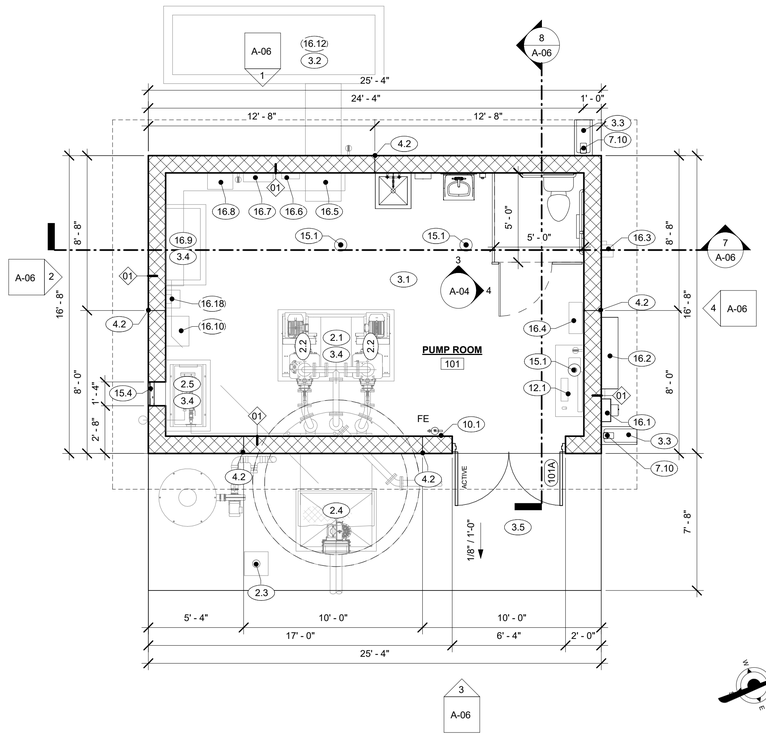

1 LENKER ESTATES - FLOOR PLAN
1/4" = 1'-0"

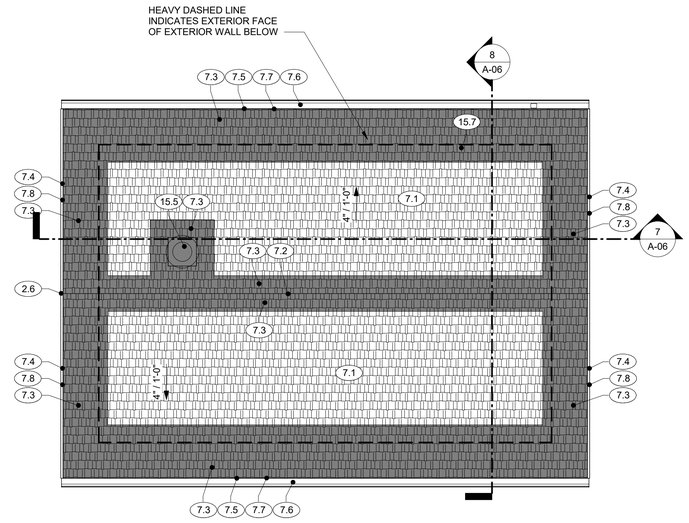

2 LENKER ESTATES - ROOF PLAN
1/4" = 1'-0"

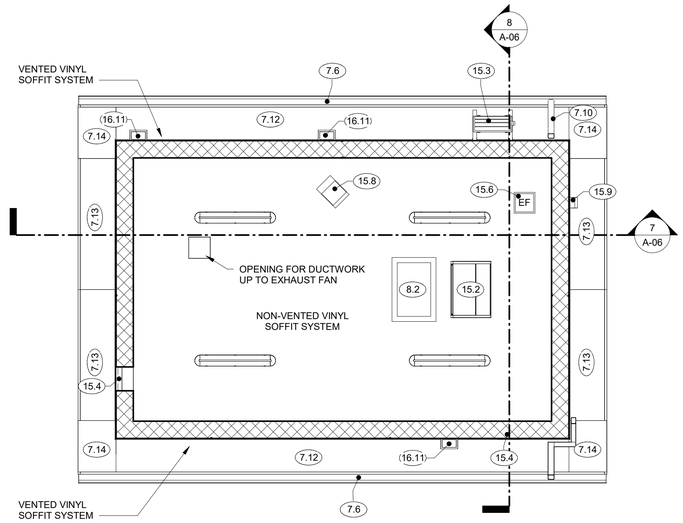

3 LENKER ESTATES - REFLECTED CEILING PLAN
1/4" = 1'-0"

GENERAL ARCHITECTURAL PLAN NOTES

1 DO NOT SCALE DRAWINGS. VERIFY ALL EXISTING CONDITIONS AT SITE BEFORE PROCEEDING WITH WORK.
2 ANY CONFLICT OR DISCREPANCY BETWEEN INFORMATION ON DRAWINGS AND ACTUAL FIELD CONDITIONS SHOULD BE BROUGHT TO THE DEPARTMENTS AND THE DEPARTMENT REPRESENTATIVE'S ATTENTION FOR RESOLUTION PRIOR TO COMMENCING WITH WORK.
3 REFER TO LIFE SAFETY PLANS FOR FIRE/SMOKE RATED PARTITIONS AND OCCUPANCY CLASSIFICATIONS.
4 PARTITION DIMENSIONS INDICATED ARE FROM FACE OF CMU TO FACE OF CMU UNLESS OTHERWISE NOTED
5 ALL DOORS SHALL MAINTAIN 18" MIN. CLEAR ON THE PULL SIDE FROM THE LATCH TO ADJACENT WALL / FIXTURE
6 PROCESS PIPING AND EQUIPMENT SHOWN FOR REFERENCE ONLY - REFER TO PROCESS DRAWINGS FOR MORE INFORMATION
7 REFER TO SHEET A-03 FOR WALL TYPES
8 REFER TO CIVIL DRAWINGS FOR FINISH FLOOR ELEVATIONS FOR EACH BUILDING - WILL BE LISTED AS 0'-0" FOR ARCHITECTURAL DRAWINGS

FE 10 POUND 4-A RATED MULTI-PURPOSE (A,B,C) FIRE EXTINGUISHER W/ STANDARD WALL MOUNTING BRACKETS

FIRE EXTINGUISHER LEGEND
1/4" = 1'-0"

KEYNOTE LEGEND

KEY	DESCRIPTION
2.1	PUMP SKID - REFER TO PROCESS DRAWINGS
2.2	PUMP - REFER TO PROCESS DRAWINGS
2.3	PORTABLE DAVIT CRANE - REFER TO PROCESS DRAWINGS
2.4	30"x48" DOUBLE DOOR ALUMINUM ACCESS HATCH - PART OF PRECAST TANK - REFER TO PROCESS DRAWINGS
2.5	WET WELL AERATION UNIT - REFER TO PROCESS DRAWINGS
2.6	FASCIA MOUNTED ANTENNA - REFER TO PROCESS / ELECTRICAL DRAWINGS
3.1	CONCRETE SLAB ON GRADE (ASSEMBLY F-A) - REFER TO STRUCTURAL DRAWINGS
3.2	CONCRETE PAD FOR EMERGENCY GENERATOR - COORDINATE SIZE W/ APPROVED EMERGENCY GENERATOR & STRUCTURAL DRAWINGS
3.3	PRECAST CONCRETE SPLASH BLOCK
3.4	CONCRETE HOUSEKEEPING PAD - REFER TO PROCESS / STRUCTURAL DRAWINGS
3.5	CONCRETE STOOP - REFER TO STRUCTURAL DRAWINGS
4.2	VERTICAL MASONRY CONTROL JOINT - REFER TO STRUCTURAL DRAWINGS
7.1	ASPHALT SHINGLE ROOFING SYSTEM W/ 30# FELT UNDERLAYMENT
7.2	ASPHALT SHINGLE RIDGE VENT
7.3	ICE & WATER SHIELD - INSTALLED PER MANUFACTURER'S WRITTEN REQUIREMENTS
7.4	PREFINISHED METAL WRAPPED WOOD 2x10 RAKE TRIM
7.5	PREFINISHED METAL WRAPPED WOOD 2x10 EAVE TRIM
7.6	PREFINISHED METAL 5" K-GUTTER SYSTEM
7.7	PREFINISHED METAL DRIP EDGE EAVE FLASHING
7.8	PREFINISHED METAL DRIP EDGE RAKE FLASHING
7.10	PREFINISHED 2x3 METAL DOWNSPOUT - TIE INTO UNDERGROUND STORMWATER MANAGEMENT SYSTEM
7.12	PREFINISHED VENTED VINYL SOFFIT SYSTEM
7.13	SLOPING PREFINISHED VENTED VINYL SOFFIT SYSTEM
7.14	PREFINISHED METAL WRAPPED WOOD TRIM
8.2	ATTIC ACCESS HATCH BETWEEN TRUSSES - REFER TO DETAILS ON STRUCTURAL DRAWINGS
10.1	ADA TACTILE BRAILLE EXIT SIGNAGE W/ PICTOGRAM
12.1	SECURITY DESK - FURNISHED AND INSTALLED BY OWNER
15.1	FLOOR DRAIN - REFER TO PLUMBING / PROCESS DRAWINGS FOR ADDITIONAL INFORMATION
15.2	MINI-SPLIT INDOOR UNIT - REFER TO MECHANICAL DRAWINGS FOR ADDITIONAL INFORMATION
15.3	MINI-SPLIT OUTDOOR UNIT W/ WALL MOUNTING BRACKET - REFER TO MECHANICAL DRAWINGS FOR ADDITIONAL INFORMATION
15.4	PREFINISHED WEATHERPROOF DRAINABLE BLADE WALL LOUVER - REFER TO MECHANICAL DRAWINGS FOR ADDITIONAL INFORMATION
15.5	ROOF EXHAUST FAN W/ CURB & CRICKET - CENTER BETWEEN ROOF TRUSSES - REFER TO MECHANICAL / ELECTRICAL DRAWINGS FOR ADDITIONAL INFORMATION
15.6	EXHAUST FAN - REFER TO MECHANICAL DRAWINGS FOR ADDITIONAL INFORMATION
15.7	VENT THRU ROOF - REFER TO DETAIL 1/A-04 AND PLUMBING DRAWINGS FOR ADDITIONAL INFORMATION
15.8	CEILING MOUNTED UNIT HEATER - REFER TO MECHANICAL DRAWINGS FOR ADDITIONAL INFORMATION
15.9	EXHAUST FAN WALL CAP - REFER TO MECHANICAL DRAWINGS FOR ADDITIONAL INFORMATION
16.1	METER BASE & SOCKET - REFER TO ELECTRICAL DRAWINGS FOR ADDTIONAL INFORMATION
16.2	CT CABINET - REFER TO ELECTRICAL DRAWINGS FOR ADDTIONAL INFORMATION
16.3	EXTERIOR WALL MOUNTED DISCONNECT SWITCH - REFER TO ELECTRICAL DRAWINGS FOR ADDTIONAL INFORMATION
16.4	MCB - REFER TO ELECTRICAL DRAWINGS FOR ADDTIONAL INFORMATION
16.5	LGCP - REFER TO ELECTRICAL DRAWINGS FOR ADDTIONAL INFORMATION
16.6	LLP - REFER TO ELECTRICAL DRAWINGS FOR ADDTIONAL INFORMATION
16.7	REMOTE ANNUNCIATOR - REFER TO ELECTRICAL DRAWINGS FOR ADDTIONAL INFORMATION
16.8	AUTOMATIC TRANSFER SWICTH - REFER TO ELECTRICAL DRAWINGS FOR ADDTIONAL INFORMATION
16.9	LPCP - REFER TO ELECTRICAL DRAWINGS FOR ADDTIONAL INFORMATION
16.10	LBCP - REFER TO ELECTRICAL DRAWINGS FOR ADDTIONAL INFORMATION
16.11	EXTERIOR WALL MOUNTED LIGHT FIXTURE - REFER TO ELECTRICAL DRAWINGS FOR ADDTIONAL INFORMATION
16.12	EMERGENCY GENERATOR - REFER TO ELECTRICAL DRAWINGS FOR ADDTIONAL INFORMATION
16.18	AUTODIALER - REFER TO ELECTRICAL DRAWINGS FOR ADDITIONAL INFORMATION

GENERAL ROOF NOTES

1 DO NOT SCALE DRAWINGS. VERIFY ALL EXISTING CONDITIONS AT SITE BEFORE PROCEEDING WITH WORK.
2 ANY CONFLICT OR DISCREPANCY BETWEEN INFORMATION ON DRAWINGS AND ACTUAL FIELD CONDITIONS SHOULD BE BROUGHT TO THE DEPARTMENTS AND THE DEPARTMENT REPRESENTATIVE'S ATTENTION FOR RESOLUTION PRIOR TO COMMENCING WITH WORK.
3 REFER TO MECHANICAL / PLUMBING DRAWINGS FOR ROOF VENT PENETRATIONS
4 REFER TO PLANS / ELEVATIONS FOR DOWNSPOUT LOCATIONS
5 ALL DOWNSPOUTS SHALL TIE INTO UNDERGROUND STORM WATER MANAGEMENT SYSTEM - REFER TO CIVIL DRAWINGS FOR ADDITIONAL INFORMATION

GENERAL CEILING NOTES

1 REFERENCE MEP AND LIGHTING DRAWINGS FOR FIXTURE TYPES AND SPECIFICATIONS.
2 REFER TO ROOM FINISH SCHEDULE FOR FURTHER MATERIAL INFORMATION.

REFLECTED CEILING SYMBOL LEGEND

9'-0" AFF ADDITIONAL CEILING HEIGHT IN A PORTION OF A SCHEDULED ROOM

MISC CONSTRUCTION

UNIT HEATER

LIGHT FIXTURES

48" LED SURFACE MOUNTED LIGHT

WALL MOUNTED BUILDING LIGHT

SGS ARCHITECTS - ENGINEERS, INC.
1 TYLER COURT
CARLISLE, PA 17015
(P) 717.249.4569
(F) 717.249.0284
WWW.SGSARCHITECTS.COM

NO.	REVISION	DATE	BY

REGISTERED ARCHITECT COMMONWEALTH OF PENNSYLVANIA DANIEL F. SCHLOSS 09/01/2022

HRG
Herbert, Rowland & Grubic, Inc.
Engineering & Related Services
AN EMPLOYEE-OWNED COMPANY
369 East Park Drive
Harrisburg, PA 17111
(717) 564-1121
Fax (717) 564-1158
hrg@hrg-inc.com
www.hrg-inc.com

HALIFAX AREA
WATER & SEWER AUTHORITY
203 ARMSTRONG STREET
HALIFAX, PA 17032
(717) 896-8063

LENKER ESTATES PUMP STATION
ARCH. FLOOR PLAN, ROOF PLAN, & RCP
FOR:
HALIFAX TOWNSHIP SEWER AUTHORITY
HALIFAX TOWNSHIP DAUPHIN COUNTY PENNSYLVANIA

PROJ. MGR. -	RAM
DESIGN-	DFS
CADD-	RAM
CHECKED-	DFS
SCALE-	As indicated
DATE-	AUG. 2022

DRAWING NO. A-05
SHEET NO. 84 OF 109
PROJECT 001650.0428

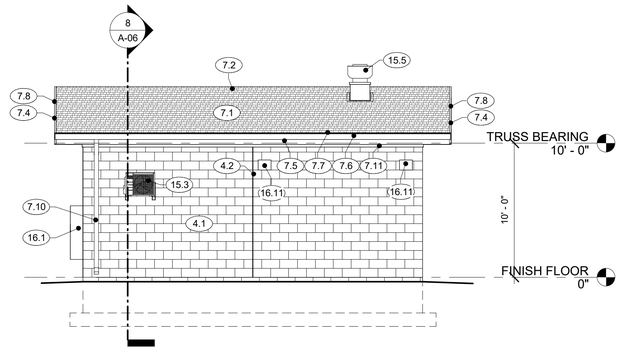

1 LENKER ESTATES - WEST ELEVATION
3/16" = 1'-0"

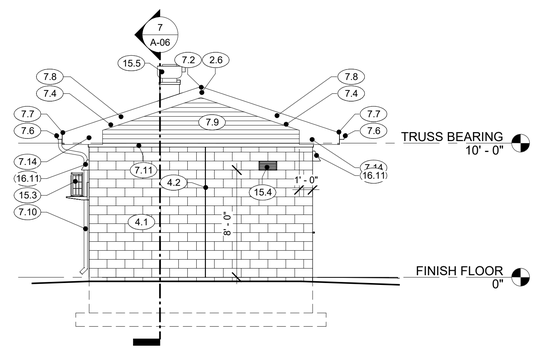

2 LENKER ESTATES - SOUTH ELEVATION
3/16" = 1'-0"

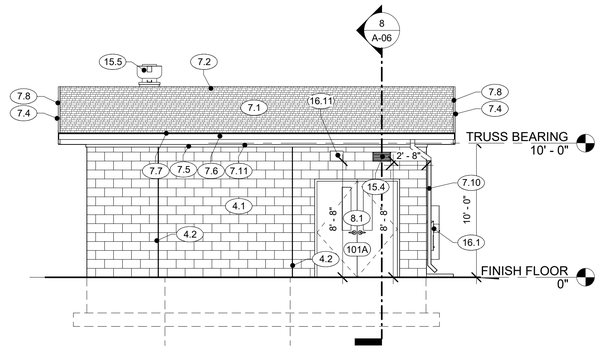

3 LENKER ESTATES - EAST ELEVATION
3/16" = 1'-0"

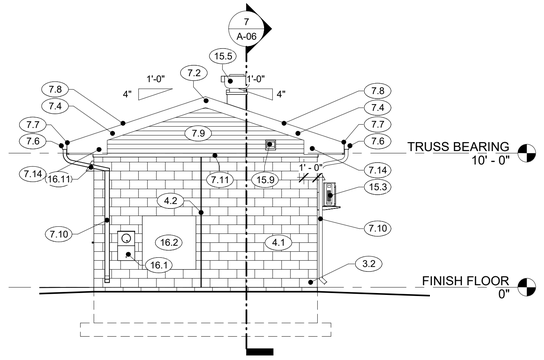

4 LENKER ESTATES - NORTH ELEVATION
3/16" = 1'-0"

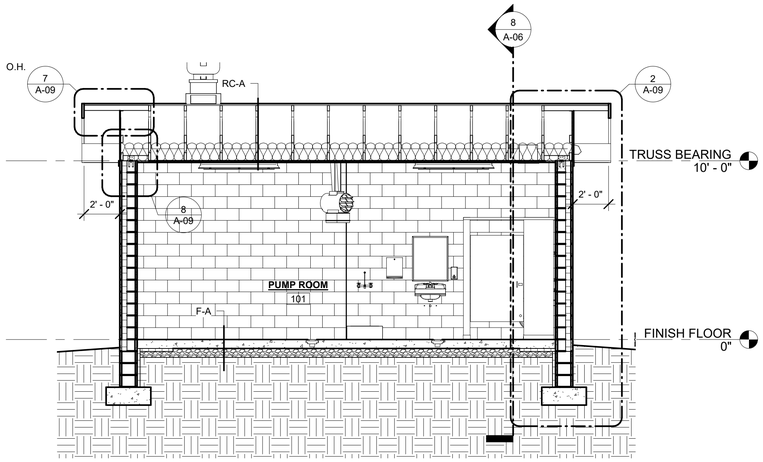

7 LENKER ESTATES LONGITUDINAL SECTION
1/4" = 1'-0"

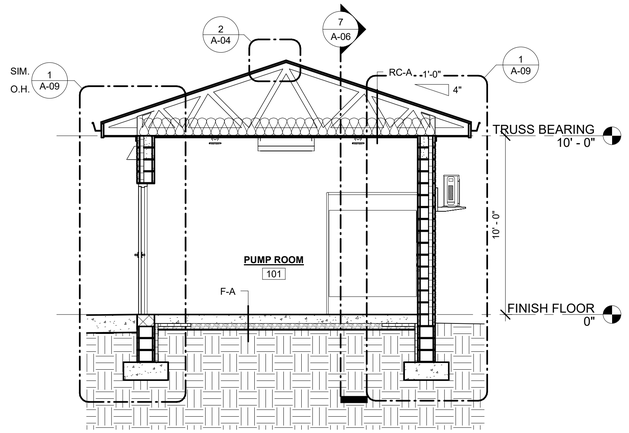

8 LENKER ESTATES CROSS SECTION
1/4" = 1'-0"

GENERAL ELEVATION NOTES

1 SLOPE EXTERIOR FINISH GRADE AWAY FROM BUILDING & STRUCTURES TO PROMOTE POSITIVE DRAINAGE.

2 REFER TO CIVIL DRAWINGS FOR FINISH FLOOR ELEVATIONS FOR EACH BUILDING - WILL BE LISTED AS 0'-0" FOR ARCHITECTURAL DRAWINGS

ELEVATION KEYNOTE LEGEND

KEY	DESCRIPTION
2.6	FASCIA MOUNTED ANTENNA - REFER TO PROCESS / ELECTRICAL DRAWINGS
3.2	CONCRETE PAD FOR EMERGENCY GENERATOR - COORDINATE SIZE W/ APPROVED EMERGENCY GENERATOR & STRUCTURAL DRAWINGS
4.1	12x8x16 SPLIT FACE HI-R-H MASONRY UNIT W/ KORFIL HI-R-H INSERT - REFER TO STRUCTURAL DWGS
4.2	VERTICAL MASONRY CONTROL JOINT - REFER TO STRUCTURAL DRAWINGS
7.1	ASPHALT SHINGLE ROOFING SYSTEM W/ 30# FELT UNDERLAYMENT
7.2	ASPHALT SHINGLE RIDGE VENT
7.4	PREFINISHED METAL WRAPPED WOOD 2x10 RAKE TRIM
7.5	PREFINISHED METAL WRAPPED WOOD 2x10 EAVE TRIM
7.6	PREFINISHED METAL 5" K-GUTTER SYSTEM
7.7	PREFINISHED METAL DRIP EDGE EAVE FLASHING
7.8	PREFINISHED METAL DRIP EDGE RAKE FLASHING
7.9	PREFINISHED HORIZONTAL VINYL SIDING SYSTEM - 4" EXPOSURE
7.10	PREFINISHED 2x3 METAL DOWNSPOUT - TIE INTO UNDERGROUND STORMWATER MANAGEMENT SYSTEM
7.11	PREFINISHED METAL WRAPPED 2x4 WOOD WALL TRIM
7.14	PREFINISHED METAL WRAPPED WOOD TRIM
8.1	INSULATED ALUMINUM DOOR & FRAME - REFER TO PLANS & DOOR SCHEDULE
15.3	MINI-SPLIT OUTDOOR UNIT W/ WALL MOUNTING BRACKET - REFER TO MECHANICAL DRAWINGS FOR ADDITIONAL INFORMATION
15.4	PREFINISHED WEATHERPROOF DRAINABLE BLADE WALL LOUVER - REFER TO MECHANICAL DRAWINGS FOR ADDITIONAL INFORMATION
15.5	ROOF EXHAUST FAN W/ CURB & CRICKET - CENTER BETWEEN ROOF TRUSSES - REFER TO MECHANICAL / ELECTRICAL DRAWINGS FOR ADDITIONAL INFORMATION
15.9	EXHAUST FAN WALL CAP - REFER TO MECHANICAL DRAWINGS FOR ADDITIONAL INFORMATION
16.1	METER BASE & SOCKET - REFER TO ELECTRICAL DRAWINGS FOR ADDTIONAL INFORMATION
16.2	CT CABINET - REFER TO ELECTRICAL DRAWINGS FOR ADDTIONAL INFORMATION
16.11	EXTERIOR WALL MOUNTED LIGHT FIXTURE - REFER TO ELECTRICAL DRAWINGS FOR ADDTIONAL INFORMATION

SGS ARCHITECTS - ENGINEERS, INC.
1 TYLER COURT
CARLISLE, PA 17015
(P) 717.249.4569
(F) 717.249.0284
WWW.SGSARCHITECTS.COM

NO.	REVISION	DATE	BY

REGISTERED ARCHITECT COMMONWEALTH OF PENNSYLVANIA RICHARD A. MOYER JR. FRANKLIN SOMERSET
09/01/2022

HRG
Herbert, Rowland & Grubic, Inc.
Engineering & Related Services
AN EMPLOYEE-OWNED COMPANY
369 East Park Drive
Harrisburg, PA 17111
(717) 564-1121
Fax (717) 564-1158
hrg@hrg-inc.com
www.hrg-inc.com

HALIFAX AREA WATER & SEWER AUTHORITY
203 ARMSTRONG STREET
HALIFAX, PA 17032
(717) 896-8063

LENKER ESTATES PUMP STATION
EXTERIOR ELEVATIONS & BUILDING SECTIONS
FOR:
HALIFAX TOWNSHIP SEWER AUTHORITY
HALIFAX TOWNSHIP DAUPHIN COUNTY PENNSYLVANIA

PROJ. MGR. -	RAM
DESIGN-	DFS
CADD-	RAM
CHECKED-	DFS
SCALE-	As indicated
DATE-	AUG. 2022

DRAWING NO.
A-06
SHEET NO.
85 OF 109
PROJECT 001650.0428

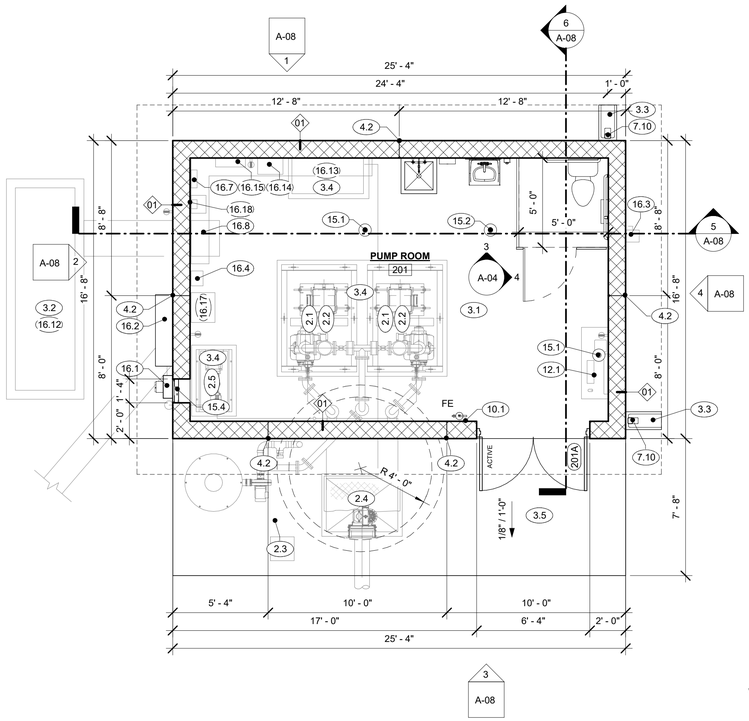

1 ROADCAP LANE - FLOOR PLAN
1/4" = 1'-0"

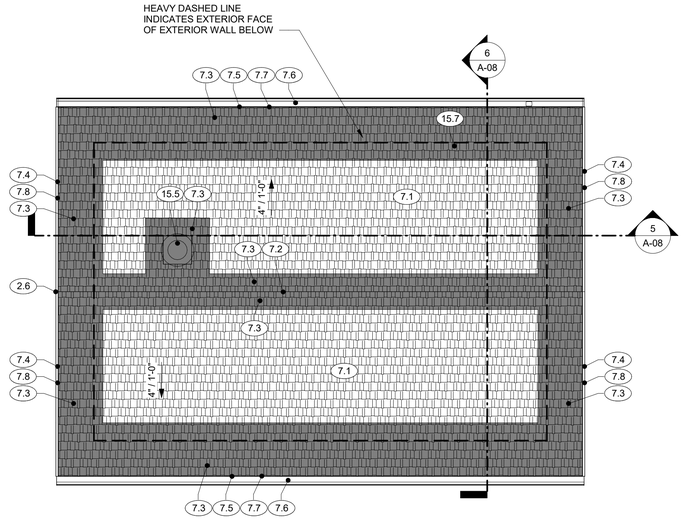

2 ROADCAP LANE - ROOF PLAN
1/4" = 1'-0"

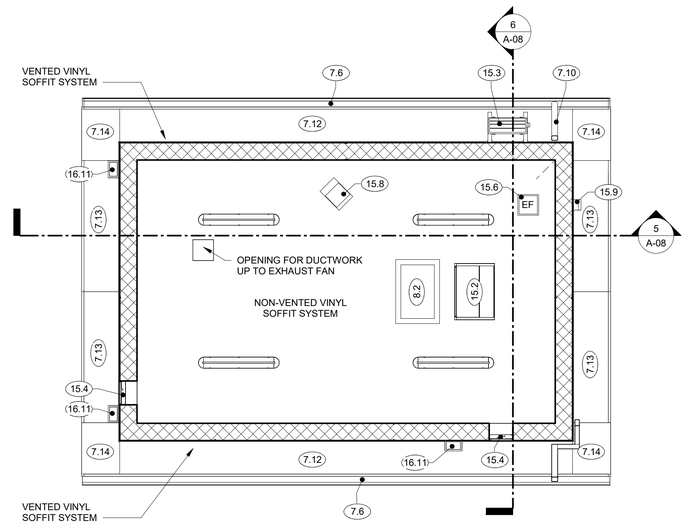

3 ROADCAP LANE - REFLECTED CEILING PLAN
1/4" = 1'-0"

GENERAL ARCHITECTURAL PLAN NOTES

1. DO NOT SCALE DRAWINGS. VERIFY ALL EXISTING CONDITIONS AT SITE BEFORE PROCEEDING WITH WORK.
2. ANY CONFLICT OR DISCREPANCY BETWEEN INFORMATION ON DRAWINGS AND ACTUAL FIELD CONDITIONS SHOULD BE BROUGHT TO THE DEPARTMENTS AND THE DEPARTMENT REPRESENTATIVE'S ATTENTION FOR RESOLUTION PRIOR TO COMMENCING WITH WORK.
3. REFER TO LIFE SAFETY PLANS FOR FIRE/SMOKE RATED PARTITIONS AND OCCUPANCY CLASSIFICATIONS.
4. PARTITION DIMENSIONS INDICATED ARE FROM FACE OF CMU TO FACE OF CMU UNLESS OTHERWISE NOTED
5. ALL DOORS SHALL MAINTAIN 18" MIN. CLEAR ON THE PULL SIDE FROM THE LATCH TO ADJACENT WALL / FIXTURE
6. PROCESS PIPING AND EQUIPMENT SHOWN FOR REFERENCE ONLY - REFER TO PROCESS DRAWINGS FOR MORE INFORMATION
7. REFER TO SHEET A-03 FOR WALL TYPES
8. REFER TO CIVIL DRAWINGS FOR FINISH FLOOR ELEVATIONS FOR EACH BUILDING - WILL BE LISTED AS 0'-0" FOR ARCHITECTURAL DRAWINGS

FE — 10 POUND 4-A RATED MULTI-PURPOSE (A,B,C) FIRE EXTINGUISHER W/ STANDARD WALL MOUNTING BRACKETS

FIRE EXTINGUISHER LEGEND
1/4" = 1'-0"

KEYNOTE LEGEND

KEY	DESCRIPTION
2.1	PUMP SKID - REFER TO PROCESS DRAWINGS
2.2	PUMP - REFER TO PROCESS DRAWINGS
2.3	PORTABLE DAVIT CRANE - REFER TO PROCESS DRAWINGS
2.4	30"x48" DOUBLE DOOR ALUMINUM ACCESS HATCH - PART OF PRECAST TANK - REFER TO PROCESS DRAWINGS
2.5	WET WELL AERATION UNIT - REFER TO PROCESS DRAWINGS
2.6	FASCIA MOUNTED ANTENNA - REFER TO PROCESS / ELECTRICAL DRAWINGS
3.1	CONCRETE SLAB ON GRADE (ASSEMBLY F-A) - REFER TO STRUCTURAL DRAWINGS
3.2	CONCRETE PAD FOR EMERGENCY GENERATOR - COORDINATE SIZE W/ APPROVED EMERGENCY GENERATOR & STRUCTURAL DRAWINGS
3.3	PRECAST CONCRETE SPLASH BLOCK
3.4	CONCRETE HOUSEKEEPING PAD - REFER TO PROCESS / STRUCTURAL DRAWINGS
3.5	CONCRETE STOOP - REFER TO STRUCTURAL DRAWINGS
4.2	VERTICAL MASONRY CONTROL JOINT - REFER TO STRUCTURAL DRAWINGS
7.1	ASPHALT SHINGLE ROOFING SYSTEM W/ 30# FELT UNDERLAYMENT
7.2	ASPHALT SHINGLE RIDGE VENT
7.3	ICE & WATER SHIELD - INSTALLED PER MANUFACTURER'S WRITTEN REQUIREMENTS
7.4	PREFINISHED METAL WRAPPED WOOD 2x10 RAKE TRIM
7.5	PREFINISHED METAL WRAPPED WOOD 2x10 EAVE TRIM
7.6	PREFINISHED METAL 5" K-GUTTER SYSTEM
7.7	PREFINISHED METAL DRIP EDGE EAVE FLASHING
7.8	PREFINISHED METAL DRIP EDGE RAKE FLASHING
7.10	PREFINISHED 2x3 METAL DOWNSPOUT - TIE INTO UNDERGROUND STORMWATER MANAGEMENT SYSTEM
7.12	PREFINISHED VENTED VINYL SOFFIT SYSTEM
7.13	SLOPING PREFINISHED VENTED VINYL SOFFIT SYSTEM
7.14	PREFINISHED METAL WRAPPED WOOD TRIM
8.2	ATTIC ACCESS HATCH BETWEEN TRUSSES - REFER TO DETAILS ON STRUCTURAL DRAWINGS
10.1	ADA TACTILE BRAILLE EXIT SIGNAGE W/ PICTOGRAM
12.1	SECURITY DESK - FURNISHED AND INSTALLED BY OWNER
15.1	FLOOR DRAIN - REFER TO PLUMBING / PROCESS DRAWINGS FOR ADDITIONAL INFORMATION
15.2	MINI-SPLIT INDOOR UNIT - REFER TO MECHANICAL DRAWINGS FOR ADDITIONAL INFORMATION
15.3	MINI-SPLIT OUTDOOR UNIT W/ WALL MOUNTING BRACKET - REFER TO MECHANICAL DRAWINGS FOR ADDITIONAL INFORMATION
15.4	PREFINISHED WEATHERPROOF DRAINABLE BLADE WALL LOUVER - REFER TO MECHANICAL DRAWINGS FOR ADDITIONAL INFORMATION
15.5	ROOF EXHAUST FAN W/ CURB & CRICKET - CENTER BETWEEN ROOF TRUSSES - REFER TO MECHANICAL / ELECTRICAL DRAWINGS FOR ADDITIONAL INFORMATION
15.6	EXHAUST FAN - REFER TO MECHANICAL DRAWINGS FOR ADDITIONAL INFORMATION
15.7	VENT THRU ROOF - REFER TO DETAIL 1/A-04 AND PLUMBING DRAWINGS FOR ADDITIONAL INFORMATION
15.8	CEILING MOUNTED UNIT HEATER - REFER TO MECHANICAL DRAWINGS FOR ADDITIONAL INFORMATION
15.9	EXHAUST FAN WALL CAP - REFER TO MECHANICAL DRAWINGS FOR ADDITIONAL INFORMATION
16.1	METER BASE & SOCKET - REFER TO ELECTRICAL DRAWINGS FOR ADDTIONAL INFORMATION
16.2	CT CABINET - REFER TO ELECTRICAL DRAWINGS FOR ADDTIONAL INFORMATION
16.3	EXTERIOR WALL MOUNTED DISCONNECT SWITCH - REFER TO ELECTRICAL DRAWINGS FOR ADDTIONAL INFORMATION
16.4	MCB - REFER TO ELECTRICAL DRAWINGS FOR ADDTIONAL INFORMATION
16.7	REMOTE ANNUNCIATOR - REFER TO ELECTRICAL DRAWINGS FOR ADDTIONAL INFORMATION
16.8	AUTOMATIC TRANSFER SWICTH - REFER TO ELECTRICAL DRAWINGS FOR ADDTIONAL INFORMATION
16.11	EXTERIOR WALL MOUNTED LIGHT FIXTURE - REFER TO ELECTRICAL DRAWINGS FOR ADDTIONAL INFORMATION
16.12	EMERGENCY GENERATOR - REFER TO ELECTRICAL DRAWINGS FOR ADDTIONAL INFORMATION
16.13	RLPCP - REFER TO ELECTRICAL DRAWINGS FOR ADDTIONAL INFORMATION
16.14	RLGCP - REFER TO ELECTRICAL DRAWINGS FOR ADDTIONAL INFORMATION
16.15	RLLP - REFER TO ELECTRICAL DRAWINGS FOR ADDTIONAL INFORMATION
16.17	RLBCP - REFER TO ELECTRICAL DRAWINGS FOR ADDTIONAL INFORMATION
16.18	AUTODIALER - REFER TO ELECTRICAL DRAWINGS FOR ADDITIONAL INFORMATION

GENERAL ROOF NOTES

1. DO NOT SCALE DRAWINGS. VERIFY ALL EXISTING CONDITIONS AT SITE BEFORE PROCEEDING WITH WORK.
2. ANY CONFLICT OR DISCREPANCY BETWEEN INFORMATION ON DRAWINGS AND ACTUAL FIELD CONDITIONS SHOULD BE BROUGHT TO THE DEPARTMENTS AND THE DEPARTMENT REPRESENTATIVE'S ATTENTION FOR RESOLUTION PRIOR TO COMMENCING WITH WORK.
3. REFER TO MECHANICAL / PLUMBING DRAWINGS FOR ROOF VENT PENETRATIONS
4. REFER TO PLANS / ELEVATIONS FOR DOWNSPOUT LOCATIONS
5. ALL DOWNSPOUTS SHALL TIE INTO UNDERGROUND STORM WATER MANAGEMENT SYSTEM - REFER TO CIVIL DRAWINGS FOR ADDITIONAL INFORMATION

GENERAL CEILING NOTES

1. REFERENCE MEP AND LIGHTING DRAWINGS FOR FIXTURE TYPES AND SPECIFICATIONS.
2. REFER TO ROOM FINISH SCHEDULE FOR FURTHER MATERIAL INFORMATION.

REFLECTED CEILING SYMBOL LEGEND

9'-0" AFF — ADDITIONAL CEILING HEIGHT IN A PORTION OF A SCHEDULED ROOM

MISC CONSTRUCTION

UNIT HEATER

LIGHT FIXTURES

48" LED SURFACE MOUNTED LIGHT

WALL MOUNTED BUILDING LIGHT

SGS ARCHITECTS - ENGINEERS, INC.
1 TYLER COURT
CARLISLE, PA 17015
(P) 717.249.4569
(F) 717.249.0284
WWW.SGSARCHITECTS.COM

NO.	REVISION	DATE	BY

REGISTERED ARCHITECT COMMONWEALTH OF PENNSYLVANIA DANIEL F. SOWERS, JR. 09/01/2022

HRG
Herbert, Rowland & Grubic, Inc.
Engineering & Related Services
AN EMPLOYEE-OWNED COMPANY
369 East Park Drive
Harrisburg, PA 17111
(717) 564-1121
Fax (717) 564-1158
hrg@hrg-inc.com
www.hrg-inc.com

HALIFAX AREA
WATER & SEWER AUTHORITY
203 ARMSTRONG STREET
HALIFAX, PA 17032
(717) 896-8063

ROADCAP LANE PUMP STATION
ARCH. FLOOR PLAN, ROOF PLAN, & RCP
FOR:
HALIFAX TOWNSHIP SEWER AUTHORITY
HALIFAX TOWNSHIP DAUPHIN COUNTY PENNSYLVANIA

PROJ. MGR. -	RAM
DESIGN-	DFS
CADD-	RAM
CHECKED-	DFS
SCALE-	As indicated
DATE-	AUG. 2022

DRAWING NO. A-07
SHEET NO. 86 OF 109
PROJECT 001650.0428

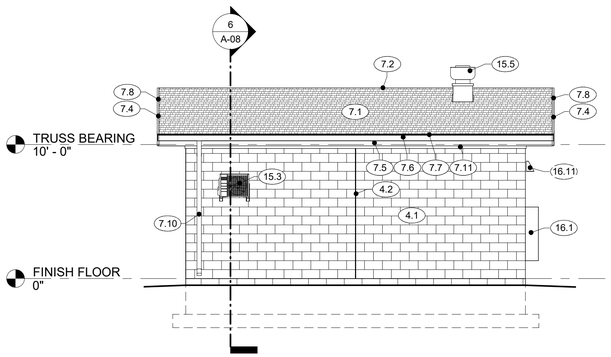

1 ROADCAP LANE - NORTH ELEVATION
3/16" = 1'-0"

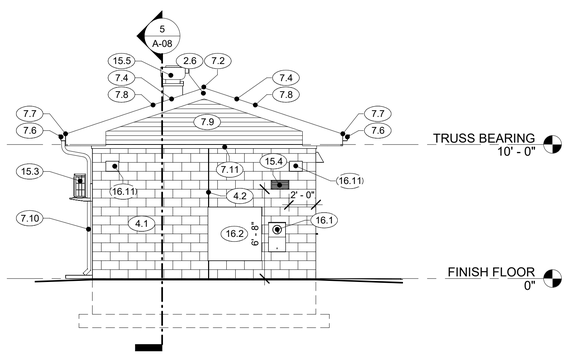

2 ROADCAP LANE - WEST ELEVATION
3/16" = 1'-0"

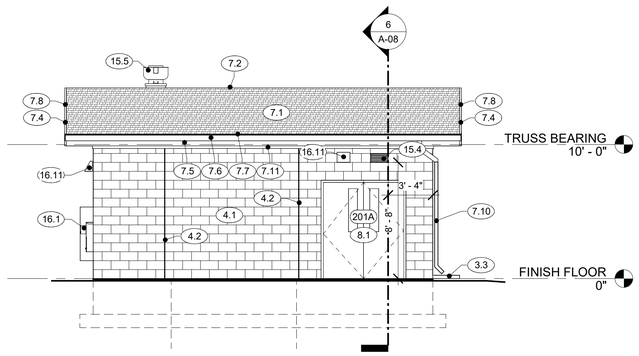

3 ROADCAP LANE - SOUTH ELEVATION
3/16" = 1'-0"

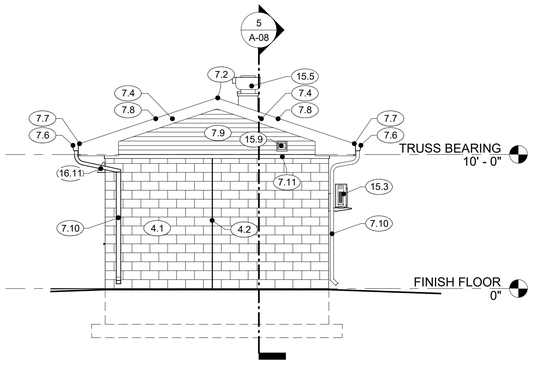

4 ROADCAP LANE - EAST ELEVATION
3/16" = 1'-0"

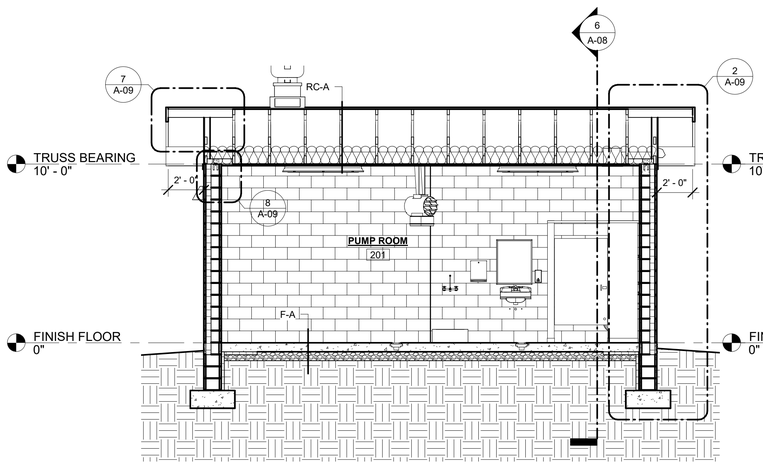

5 ROADCAP LANE - LONGITUDINAL SECTION
1/4" = 1'-0"

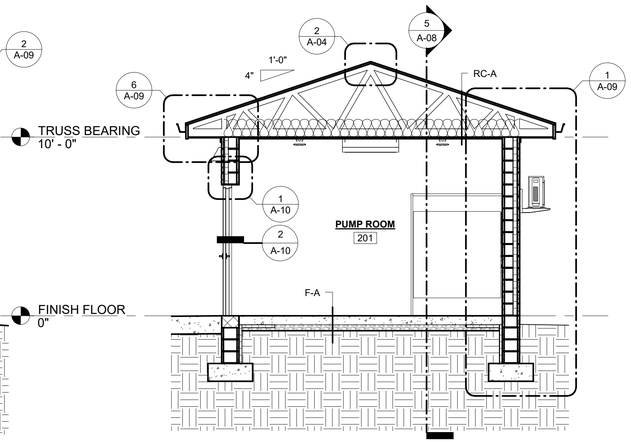

6 ROADCAP LANE - CROSS SECTION
1/4" = 1'-0"

GENERAL ELEVATION NOTES

1 SLOPE EXTERIOR FINISH GRADE AWAY FROM BUILDING & STRUCTURES TO PROMOTE POSITIVE DRAINAGE.

2 REFER TO CIVIL DRAWINGS FOR FINISH FLOOR ELEVATIONS FOR EACH BUILDING - WILL BE LISTED AS 0'-0" FOR ARCHITECTURAL DRAWINGS

ELEVATION KEYNOTE LEGEND

KEY	DESCRIPTION
2.6	FASCIA MOUNTED ANTENNA - REFER TO PROCESS / ELECTRICAL DRAWINGS
3.3	PRECAST CONCRETE SPLASH BLOCK
4.1	12x8x16 SPLIT FACE HI-R-H MASONRY UNIT W/ KORFIL HI-R-H INSERT - REFER TO STRUCTURAL DWGS
4.2	VERTICAL MASONRY CONTROL JOINT - REFER TO STRUCTURAL DRAWINGS
7.1	ASPHALT SHINGLE ROOFING SYSTEM W/ 30# FELT UNDERLAYMENT
7.2	ASPHALT SHINGLE RIDGE VENT
7.4	PREFINISHED METAL WRAPPED WOOD 2x10 RAKE TRIM
7.5	PREFINISHED METAL WRAPPED WOOD 2x10 EAVE TRIM
7.6	PREFINISHED METAL 5" K-GUTTER SYSTEM
7.7	PREFINISHED METAL DRIP EDGE EAVE FLASHING
7.8	PREFINISHED METAL DRIP EDGE RAKE FLASHING
7.9	PREFINISHED HORIZONTAL VINYL SIDING SYSTEM - 4" EXPOSURE
7.10	PREFINISHED 2x3 METAL DOWNSPOUT - TIE INTO UNDERGROUND STORMWATER MANAGEMENT SYSTEM
7.11	PREFINISHED METAL WRAPPED 2x4 WOOD WALL TRIM
8.1	INSULATED ALUMINUM DOOR & FRAME - REFER TO PLANS & DOOR SCHEDULE
15.3	MINI-SPLIT OUTDOOR UNIT W/ WALL MOUNTING BRACKET - REFER TO MECHANICAL DRAWINGS FOR ADDITIONAL INFORMATION
15.4	PREFINISHED WEATHERPROOF DRAINABLE BLADE WALL LOUVER - REFER TO MECHANICAL DRAWINGS FOR ADDITIONAL INFORMATION
15.5	ROOF EXHAUST FAN W/ CURB & CRICKET - CENTER BETWEEN ROOF TRUSSES - REFER TO MECHANICAL / ELECTRICAL DRAWINGS FOR ADDITIONAL INFORMATION
15.9	EXHAUST FAN WALL CAP - REFER TO MECHANICAL DRAWINGS FOR ADDITIONAL INFORMATION
16.1	METER BASE & SOCKET - REFER TO ELECTRICAL DRAWINGS FOR ADDTIONAL INFORMATION
16.2	CT CABINET - REFER TO ELECTRICAL DRAWINGS FOR ADDTIONAL INFORMATION
16.11	EXTERIOR WALL MOUNTED LIGHT FIXTURE - REFER TO ELECTRICAL DRAWINGS FOR ADDTIONAL INFORMATION

SGS ARCHITECTS - ENGINEERS, INC.
1 TYLER COURT
CARLISLE, PA 17015
(P) 717.249.4569
(F) 717.249.0284
WWW.SGSARCHITECTS.COM

NO.	REVISION	DATE	BY

REGISTERED ARCHITECT COMMONWEALTH OF PENNSYLVANIA FRANKLIN SOMERS III
09/01/2022

HRG
Herbert, Rowland & Grubic, Inc.
Engineering & Related Services
AN EMPLOYEE-OWNED COMPANY
369 East Park Drive
Harrisburg, PA 17111
(717) 564-1121
Fax (717) 564-1158
hrg@hrg-inc.com
www.hrg-inc.com

HALIFAX AREA
WATER & SEWER AUTHORITY
203 ARMSTRONG STREET
HALIFAX, PA 17032
(717) 896-8063

ROADCAP LANE PUMP STATION
EXTERIOR ELEVATIONS & BUILDING SECTIONS
FOR:
HALIFAX TOWNSHIP SEWER AUTHORITY
HALIFAX TOWNSHIP **DAUPHIN COUNTY** **PENNSYLVANIA**

PROJ. MGR. -	RAM
DESIGN-	DFS
CADD-	RAM
CHECKED-	DFS
SCALE-	As indicated
DATE-	AUG. 2022

DRAWING NO.
A-08
SHEET NO.
87 OF 109
PROJECT 001650.0428

GENERAL DETAIL NOTES

1 INSTALL ASPHALT SHINGLE ROOFING SYSTEM IN STRICT ACCORDANCE W/ MANUFACTURERS WRITTEN INSTALLATION REQUIREMENTS. DETAILS SHOWN ARE INTENDED TO PROVIDE GRAPHICAL REPRESENTATION FOR REFERENCE ONLY

2 INSTALL GUTTER & DOWNSPOUT SYSTEM TO PROVIDE WATER TIGHT CONSTRUCTION FOR FLOW OF RUNOFF INTO THE GUTTER AND DOWNSPOUT

3 REFER TO A-04 FOR FLOOR, ROOF, AND WALL ASSEMBLIES

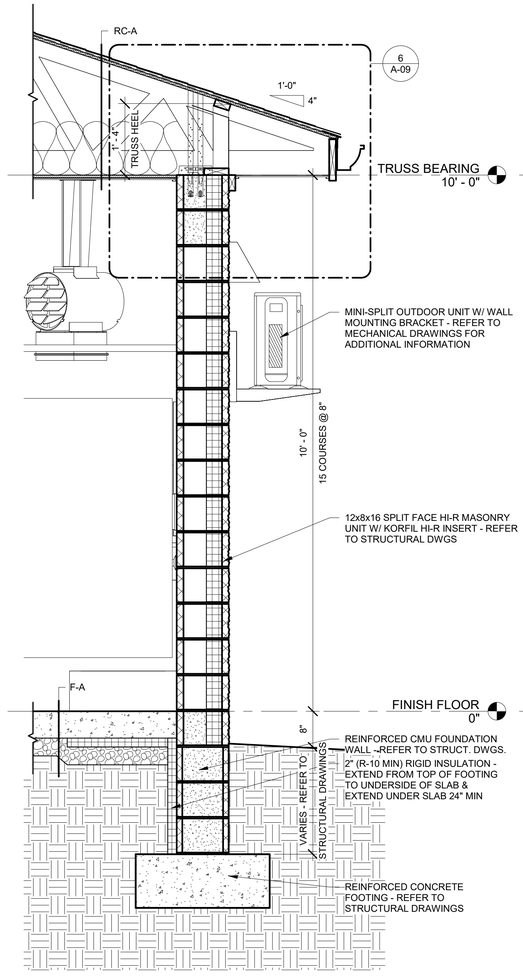

1 TYPICAL WALL SECTION
3/4" = 1'-0"

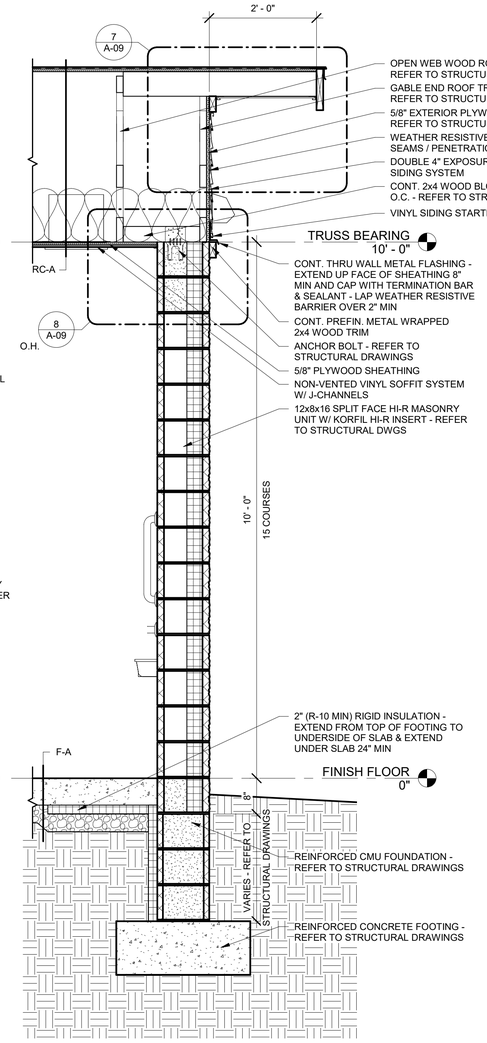

2 WALL SECTION - RAKE END
3/4" = 1'-0"

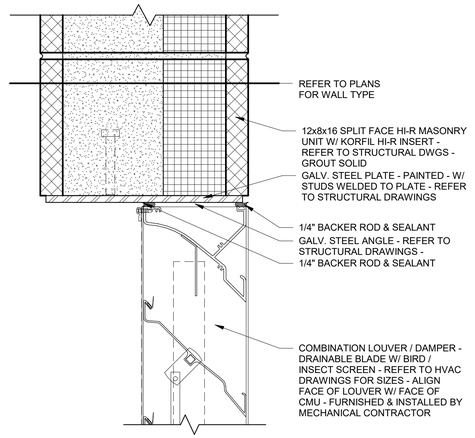

3 LOUVER HEAD / WINDOW SILL DETAIL
3" = 1'-0"

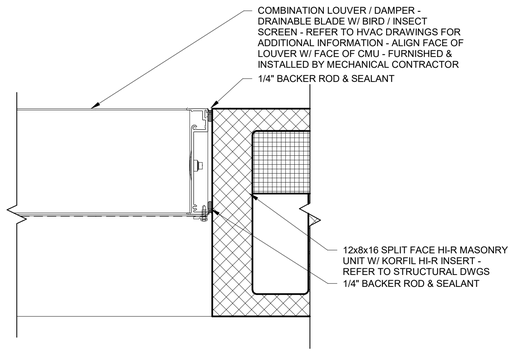

4 LOUVER JAMB DETAIL
3" = 1'-0"

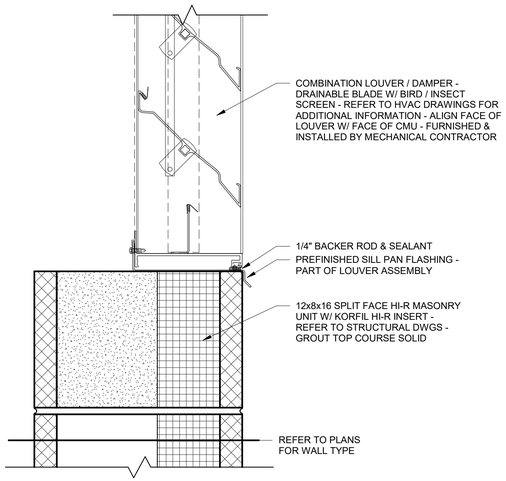

5 LOUVER SILL DETAIL
3" = 1'-0"

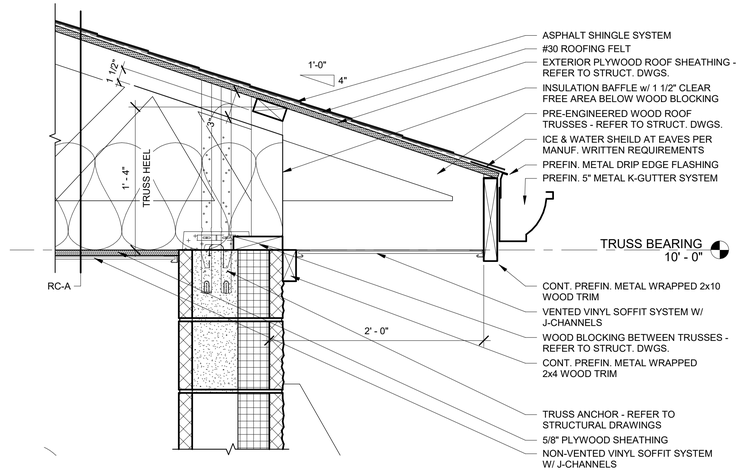

6 TYPICAL EAVE DETAIL
1 1/2" = 1'-0"

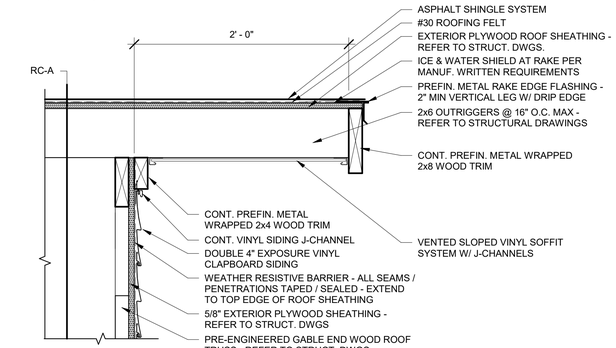

7 TYPICAL RAKE DETAIL
1 1/2" = 1'-0"

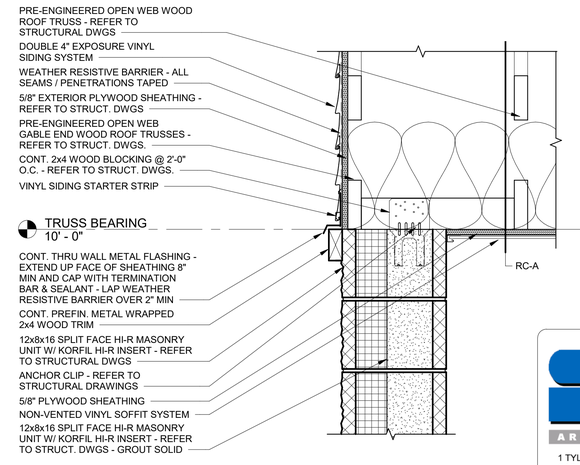

8 TOP OF WALL DETAIL - PARALLEL WITH TRUSSES
1 1/2" = 1'-0"

SGS ARCHITECTS - ENGINEERS, INC.
1 TYLER COURT
CARLISLE, PA 17015
(P) 717.249.4569
(F) 717.249.0284
WWW.SGSARCHITECTS.COM

NO.	REVISION	DATE	BY

REGISTERED ARCHITECT COMMONWEALTH OF PENNSYLVANIA SHAWN M. SOMERS JR.
09/01/2022

HRG
Herbert, Rowland & Grubic, Inc.
Engineering & Related Services
AN EMPLOYEE-OWNED COMPANY
369 East Park Drive
Harrisburg, PA 17111
(717) 564-1121
Fax (717) 564-1158
hrg@hrg-inc.com
www.hrg-inc.com

HALIFAX AREA WATER & SEWER AUTHORITY
203 ARMSTRONG STREET
HALIFAX, PA 17032
(717) 896-8063

LENKER ESTATES & ROADCAP LANE PUMP STATIONS
WALL SECTIONS & DETAILS
FOR:
HALIFAX TOWNSHIP SEWER AUTHORITY
HALIFAX TOWNSHIP DAUPHIN COUNTY PENNSYLVANIA

PROJ. MGR. -	RAM
DESIGN-	DFS
CADD-	RAM
CHECKED-	DFS
SCALE-	As indicated
DATE-	AUG. 2022

DRAWING NO.
A-09
SHEET NO.
88 OF 109
PROJECT 001650.0428

DOOR SCHEDULE

ROOM NAME	DOOR Mark	Width	Height	Thick.	Elevation	Material	Finish	Glass	FRAME Type	Material	Finish	Size	DETAILS Head	Jamb	Fire Rating	Hardware Set	Comments
PUMP ROOM	101A	2@3'-0"	7' - 2"	1 3/4"	2N	ALUM	PF	TIG	F-1	ALUM	PF	4 1/2"	1/A-08	2/A-08	--	1	* 3/8" UNDERCUT ; DOOR SIGN #1
PUMP ROOM	201A	2@3'-0"	7' - 2"	1 3/4"	2N	ALUM	PF	TIG	F-1	ALUM	PF	4 1/2"	1/A-08	2/A-08	--	1	* 3/8" UNDERCUT ; DOOR SIGN #1

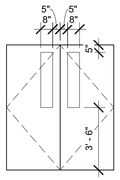

TYPE 2N
DOUBLE NARROW
VISION PANEL

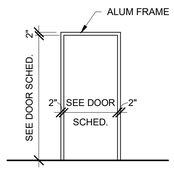

TYPE F-1

DOOR TYPES
SCALE : 1/4"=1'-0"

FRAME TYPES
SCALE : 1/4"=1'-0"

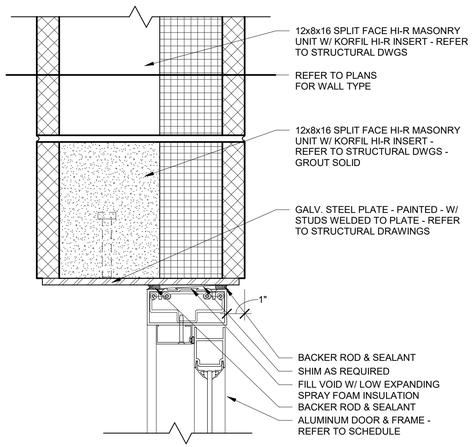

1 HEAD DETAIL
3" = 1'-0"

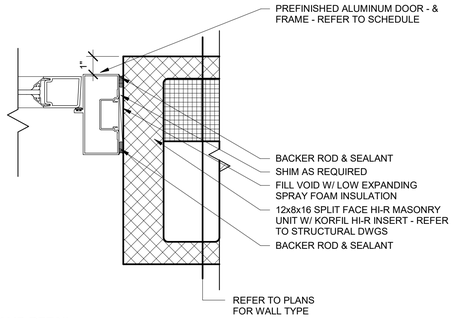

2 JAMB DETAIL
3" = 1'-0"

DOOR SIGN LEGEND

1 ADA COMPLIANT TACTILE "EXIT" SIGN
W/ BRAILLE & PICTOGRAM

HARDWARE MANUFACTURER LISTING

HARDWARE MANUFACTURER LISTING

PRODUCT	SPECIFIED MFG.	APPROVED MFG.
CONT. HINGES	STANLEY	PEMKO, ROTON, ABH
LOCKSETS	BEST	DORMA, YALE 5400, SCHLAGE ND
CLOSERS	BEST	DORMA NORTON 8500/7500 LCN 1400/4040
EXIT DEVICES	PRECISION	DORMA VON DUPRIN SARGENT
THRESHOLDS & SEALS	NATIONAL GUARD	PEMKO, REESE
PUSH/PULL DOOR STOPS FLUSHBOLTS	TRIMCO	BURNS, ROCKWOOD MFG.
CYLINDER/KEYS	BEST	DORMA YALE KEYMARK SCHLAGE EVEREST

DOOR HARDWARE SCHEDULE

HARDWARE SET NO. 1
DOOR 101A, 201A

2	CONTINUOUS HINGE	661HD UL X LAR EPT PREP	AL	ST
1	EXIT DEVICE	C MLR WTS 2303 X M4903A	630	PR
1	DUST PROOF STRIKE	3911	626	TR
2	MANUAL FLUSHBOLT	3913	626	TR
1	MORTISE CYLINDER	1E-74 PATD CORMAX PATENTED KEYING	626	BE
1	CLOSER	HD8016 SDS	630	BE
1	WEATHERSTRIP	700N HEAD & JAMBS		NA
1	ASTRAGAL SET	115NA		NA
1	DRIP CAP	16 A - 4" ODW		NA
2	DOOR SWEEP	200NA X LAR		NA
1	THRESHOLD	896N X LAR 1/4-20 SSMS/EA	AL	NA

DOOR HARDWARE FINISH LIST

CODE	DESCRIPTION
AL	ALUMINUM
626	SATIN CHROMIUM PLATED
630	SATIN STAINLESS STEEL
BLACK	BLACK

BASIS OF DESIGN MANUF. LIST

CODE	NAME
BE	BEST ACCESS SYSTEMS
BY	BY OTHERS
HS	HES
NA	NATIONAL GUARD
PR	PRECISION
RC	RCI
ST	STANLEY
TR	TRIMCO

ROOM OR SPACE

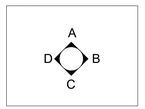

KEY PLAN
NOT TO SCALE

PARTIAL ABBREVIATION LIST

ALUM	ALUMINUM
BR	SPECBRIK
CONC	CONCRETE
EP	EPOXY PAINT
P	PAINT
PF	PRE-FINISHED
S / H	SEALED & HARDENED
STL	GALVANIZED STEEL
TIG	1" TEMPERED INSULATED GLASS
VS	VINYL SOFFIT

GENERAL FINISH NOTES

1. FINISH MATERIALS LISTED BY ABBREVIATIONS ARE APPLICABLE WHERE AND AS NOTED ON ANY OR ALL DRAWINGS TO INCLUDE PLANS, ENLARGED PLANS, ELEVATIONS AND DETAILS AS REFERENCED
2. REFER TO SPECIFICATION FOR FURTHER FINISH INFORMATION, INCLUDING HARDWARE, DOOR/WALL PROTECTION MATERIALS, PAINT SYSTEMS, ETC.
3. ONLY APPLY FINISH MATERIALS WHEN ENVIRONMENTAL CONDITIONS (AIR QUALITY, HUMIDITY AND TEMPERATURE) MEET MANUFACTURERS' REQUIREMENTS
4. ALL INTERIOR FINISH MATERIALS SHALL BE OF LOW VOC CONTENT AS SPECIFIED, INCLUDING CAULKING SEALANT MATERIALS, FOAM INSULATION MATERIALS, ADHEASIVES, SEALERS, GROUTS, PAINTS,& CLEAR FINISHES
5. DO NOT APPLY PAINTS UNTIL PROPER SUBSTRATE PREPARATION & THOROUGH CLEANING OF THE WORK AREA HAS BEEN COMPLETED
6. DO NOT APPLY LIQUID TYPE FINISHES WHEN AIRBORNE DUST AND PARTICULATES ARE PRESENT
7. FASTENERS IN ALL EXPOSED WOOD FINISHES SHALL BE COUNTERSUNK. A WOOD PUTTY OR FILLER MATCHING THE PROPOSED FINISH COLOR SHALL BE INSTALLED, CURED, & SANDED SMOOTH PRIOR TO APPLICATION OF PAINT, STAIN, OR CLEAR SEALER.
8. ATTACH ALL FINISH MATERIALS TO STABLY & SECURELY INSTALLED BACK-UP AND BLOCKING MATERIALS RESULTING IN SOLID, STRONG CONNECTION. NAIL OR SMALL DIA SHANK SCREWS ARE ACCEPTABLE FOR INTERIOR WORK.

ROOM FINISH SCHEDULE

NO.	NAME	FLOOR SUB.	FLOOR MAT.	BASE MAT.	BASE HT.	WALLS A	WALLS B	WALLS C	WALLS D	CEILING MAT.	CEILING HT.	FINISHES A	FINISHES B	FINISHES C	FINISHES D	FINISHES CLNG.	FINISHES DOOR	FINISHES DOOR FRAME	FINISHES WIN.	COLOR FLOOR	COLOR BASE	COLOR A	COLOR B	COLOR C	COLOR D	COLOR CLNG.	COLOR DOOR	COLOR DOOR FRAME	COLOR WIN.	REMARKS
101	PUMP ROOM	CONC	S / H	--	--	CMU	CMU	CMU	CMU	VS	19'-0"	EP	EP	EP	EP	PF	PF	PF	--	--	--	EP-X	EP-X	EP-X	EP-X	PF	PF	PF	--	--
201	PUMP ROOM	CONC	S / H	--	--	CMU	CMU	CMU	CMU	VS	19'-0"	EP	EP	EP	EP	PF	PF	PF	--	--	--	EP-X	EP-X	EP-X	EP-X	PF	PF	PF	--	--

SGS ARCHITECTS-ENGINEERS, INC.
1 TYLER COURT
CARLISLE, PA 17015
(P) 717.249.4569
(F) 717.249.0284
WWW.SGSARCHITECTS.COM

NO.	REVISION	DATE	BY

REGISTERED ARCHITECT COMMONWEALTH OF PENNSYLVANIA
09/01/2022

HRG
Herbert, Rowland & Grubic, Inc.
Engineering & Related Services
AN EMPLOYEE-OWNED COMPANY
369 East Park Drive
Harrisburg, PA 17111
(717) 564-1121
Fax (717) 564-1158
hrg@hrg-inc.com
www.hrg-inc.com

HALIFAX AREA
WATER & SEWER AUTHORITY
203 ARMSTRONG STREET
HALIFAX, PA 17032
(717) 896-8063

LENKER ESTATES & ROADCAP LANE PUMP STATIONS
ROOM & DOOR SCHED, DOOR DETAILS, & MISC DETAILS
HALIFAX TOWNSHIP SEWER AUTHORITY
HALIFAX TOWNSHIP DAUPHIN COUNTY PENNSYLVANIA

PROJ. MGR. -	RAM
DESIGN-	DFS
CADD-	RAM
CHECKED-	DFS
SCALE-	As indicated
DATE-	AUG. 2022

DRAWING NO.
A-10
SHEET NO.
89 OF 109
PROJECT 001650.0428

CORROSION RESISTANT ELECTRIC HORIZONTAL UNIT HEATER SCHEDULE

SYMBOL	DESCRIPTION	MFG.	MODEL	KW	VOLTAGE	HP	CONTROL VOLTAGE	AMPS	STAGES	HEATING MBH	CFM	THROW	WEIGHT LBS.	REMARKS
CRHUH-1	HORIZONTAL UNIT HEATER	*QMARK	QWD10212	10.0	240V-1ø	–	24	42.4	2	34.1	1450	–	60	(1) (2) (3)

NOTES:
(1) PROVIDE WITH REMOTE WALL MOUNTED THERMOSTAT MOUNTED AT 42" TO BOTTOM.
(2) PROVIDE WITH MOUNTING BRACKET (HORIZONTAL).
(3) PROVIDE WITH CORROSION RESISTANT CONSTRUCTION AND COATING.

*ALTERNATE INDEECO OR APPROVED EQUAL

CORROSION RESISTANT EXHAUST FAN SCHEDULE

SYMBOL	SERVING	TYPE *	C.F.M.	E.S.P.	R.P.M.	WATTS OR HP	VOLTAGE	REFERENCE MFG.	REFERENCE MODEL NO.	WEIGHT LBS.	REMARKS	RECOMMENDED DUCT SIZE & ROOF OPENING SIZE
CRPRE-1	PUMP ROOM 101	RT	600	0.375"	870	1/4	115/60/1	* GREENHECK	GB-120-4	65	NOTES 1,2,3,4,5,6	DUCT 12X12, ROOF OPENING 19"X19"

C = CEILING MOUNTED RT = ROOF TOP WM = WALL MOUNTED IL = IN-LINE

NOTES:
1. PROVIDE CORROSION RESISTANT CONSTRUCTION WITH MACROPOXY COATING.
2. PROVIDE 12" PITCHED ALUMINUM ROOF CURB.
3. CONTROLLED BY DOOR SWITCH, REVERSE ACTING STAT, HUMDISTAT & SENSORS BY E.C.
4. CONTROLLED BY REVERSE ACTING STAT, HUMDISTAT & OCCUPANCY SENSORS BY E.C.
5. PROVIDE WITH DAMPER TRAY AND BACK-DRAFT DAMPER.
6. PROVIDE WITH INSECT SCREEN.

*ALTERNATE CARNES OR APPROVED EQUAL

EXHAUST FAN SCHEDULE

SYMBOL	SERVING	TYPE *	C.F.M.	E.S.P.	R.P.M.	WATTS OR HP	VOLTAGE	REFERENCE MFG.	REFERENCE MODEL NO.	WEIGHT LBS.	REMARKS
CEF-1	PUMP ROOM 101	C	110	0.20"	950	80W	115/60/1	* GREENHECK	SP-B110	20	NOTE 1,2,3,4

C = CEILING MOUNTED RT = ROOF TOP WM = WALL MOUNTED IL = IN-LINE

NOTES:
1. CONTROLLED BY LIGHT SWITCH.
2. PROVIDE WITH BACK-DRAFT DAMPER.
3. PROVIDE WITH RECTANGULAR WALL CAP WITH INSECT SCREEN.
4. PROVIDE WITH INSECT SCREEN.

* ALTERNATE CARNES OR APPROVED EQUAL

PACKAGED DUCTED MINI SPLIT SYSTEM HEAT PUMP

SYMBOL	MFG.	MODEL NO.	CFM	COOLING CAPACITY TOTAL MBH	COOLING CAPACITY S.E.E.R.	ELECTRICAL CHARACTERISTICS COMPRESSOR R.L.A.	COMPRESSOR L.R.A.	O.D. FAN H.P.	O.D. FAN F.L.A.	POWER SUPPLY MCA	POWER SUPPLY MFA	VOLTAGE	REMARKS
MS-1	MITSUBISHI	PCA-A36KA7	990	–	–	–	–	--	–	–	–	–	(4)
OU-1	MITSUBISHI	PUZ-A36NHA7	–	36.0	19.1	–	–	--	–	–	30	208/230V-1PH	(1) (2) (3) (5)

*ALTERNATE FUJITSU OR EQUAL

REMARKS
(1) UNIT SHALL BE PROVIDED WITH THE FOLLOWING ACCESSORIES: TIME DELAY RELAY, LOW AMBIENT CONTROLLER, WINTER START CONTROL EVAPORATOR DEFROST CONTROL KIT, HIGH LOW PRESSURE CUT-OUT SWITCH AND 8" HIGH SNOW LEGS.
(2) REFRIGERANT LINE SETS SHALL BE SIZED PER MANUFACTURERS RECOMMENDATIONS AND SHALL BE INSULATED WITH 1" AP ARMAFLEX .
(3) WIRED AND INTERLOCKED WITH RESPECTIVE INDOOR UNIT MS-X.
(4) WALL MOUNTED WITH WIRED THERMOSTAT.
(5) PROVIDE WIND BAFFLES FOR LOW AMBIENT COOLING TO 0 DEG. F.

HVAC GENERAL NOTES

1. THIS CONTRACTOR SHALL PERFORM IS WORK IN COMPLIANCE WITH ALL PERTINENT CODES, RULES, ORDINANCES AND REGULATIONS OF ALL STATE, LOCAL AND NATIONAL GOVERNING AUTHORITIES THAT HAVE JURISDICTION OVER THIS BUILDING.
2. DO NOT SCALE DRAWINGS - ALL DIMENSIONS SHALL BE CHECKED AND VERIFIED BY THIS CONTRACTOR. CONTRACTOR SHALL NOTIFY ENGINEER OF ANY DEVIATIONS THAT ARE FOUND BETWEEN THE DRAWINGS AND SITE CONDITIONS.
3. CONTRACTOR SHALL REPORT ALL DISCREPANCIES FOUND IN THE DRAWINGS AND/OR IN THE SPECIFICATIONS FOR CLARIFICATION.
4. THE DRAWINGS ARE DIAGRAMMATIC AND SHOW ONLY THE GENERAL ARRANGEMENT OF ALL DUCTWORK, PIPING AND EQUIPMENT LAYOUT. BECAUSE OF THE SMALL SCALE OF THE DRAWINGS, IT IS NOT POSSIBLE TO SHOW OR INDICATE ALL OFFSETS, FITTINGS AND ACCESSORIES WHICH MAY BE REQUIRED TO AVOID EXISTING PIPING OR STRUCTURAL FEATURES THEREFORE THE CONTRACTOR SHALL PROVIDE WHAT IS REQUIRED TO INSTALL A COMPLETE SYSTEM.
5. ALL DUCTWORK SIZES NOTED ARE FREE AREA SIZES. THE FIRST FIGURE OF THE DUCT SIZE INDICATES THE DIMENSION OF THE FACE SHOWN OR INDICATED. EXHAUST DUCTWORK DOES NOT REQUIRE INSULATION.
6. INSURE THAT ALL EXHAUST, FLUE AND VENTS ARE MINIMUM 10'-0" FROM ALL FRESH AIR INTAKES.
7. HVAC EQUIPMENT SHALL BE CLEANED, LUBRICATED AND HAVE NEW FILTERS INSTALLED PRIOR TO START-UP.
8. ALL DUCTWORK SHALL BE RUN ABOVE CEILING.
9. ALL CUTTING AND PATCHING REQUIRED FOR THIS WORK SHALL BE DONE BY THE GENERAL CONTRACTOR.
10. DUCTWORK AND EQUIPMENT INSTALLATION SHALL BE COORDINATED WITH ALL OTHER TRADES.
11. THIS CONTRACTOR SHALL COORDINATE ALL HVAC POWER REQUIREMENTS WITH THE ELECTRICAL CONTRACTOR.
12. THE CONTRACTOR SHALL INSURE THAT THE ALL-WEATHER LOUVERS INSTALLED FOR FRESH AIR INTAKE DO NOT EXCEED THE WATER PENETRATION VELOCITY.
13. THIS CONTRACTOR SHALL BE RESPONSIBLE FOR CHECKING TRUSS CONFIGURATION WITH EQUIPMENT LOCATIONS AND DUCT LAYOUT, PRIOR TO ORDERING DUCTWORK TO INSURE THAT LAYOUT WILL FIT IN AVAILABLE SPACE. THIS CONTRACTOR SHALL MAKE CHANGES AS REQUIRED WITHOUT COST TO THE OWNER.
14. CAP AND SEAL ALL DUCTWORK, PIPING, FLUES, INTAKES, ETC. UNTIL FINAL CONNECTION IS MADE.
15. DO NOT RUN DUCTWORK OVER ELECTRICAL EQUIPMENT.
16. PROVIDE RECOMMENDED MANUFACTURER CLEARANCES AROUND EQUIPMENT FOR SERVICING AND OPERATION.
17. VERIFY ALL MOUNTING HEIGHTS AND REQUIREMENTS FOR EQUIPMENT WITH EQUIPMENT INSTALLATION REQUIREMENTS, ARCHITECTURAL DRAWINGS, CODE ENFORCEMENT OFFICER AND OWNER.
18. METAL DUCTWORK SHALL BE G90 GALVANIZED SHEET METAL.
19. ELECTRICAL DISCONNECT SWITCHES BY E.C.

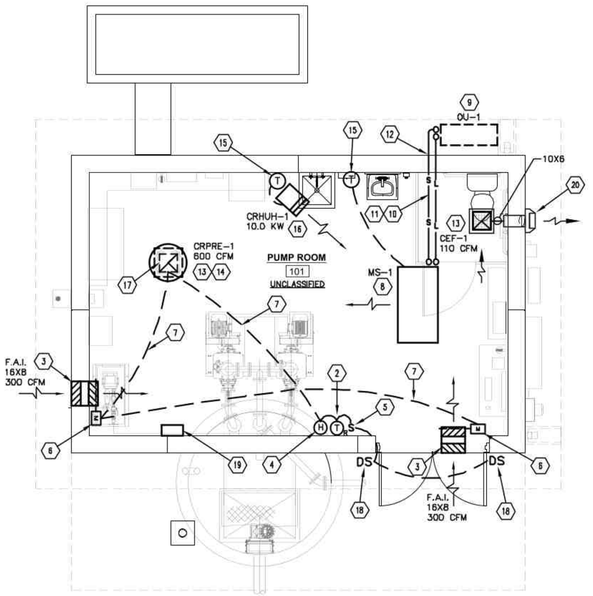

LENKER ESTATES - FLOOR PLAN - HVAC (1)
1/4" = 1'-0"

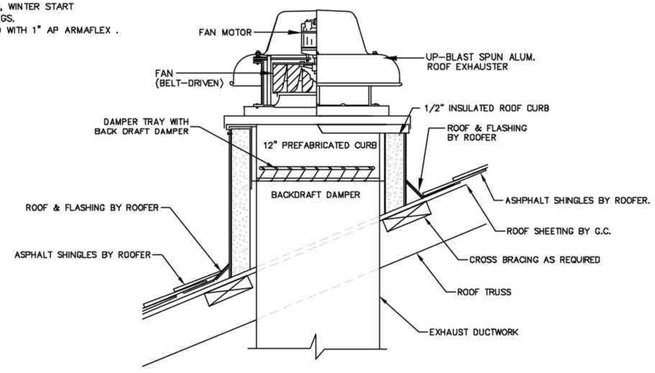

TYPICAL DOWN BLAST EXHAUST FAN DETAIL
NO SCALE

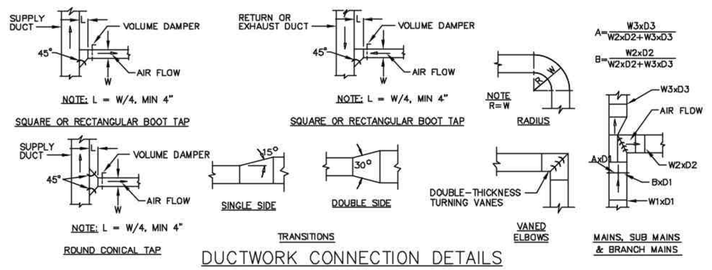

DUCTWORK CONNECTION DETAILS
NO SCALE

PUMP/ELECTRICAL ROOM VENTILATION SYSTEM SEQUENCE OF OPERATION

THE SEQUENCE OF OPERATION FOR THIS VENTILATION SYSTEM SHALL BE AS FOLLOWS:

OCCUPIED: THE POWER ROOF EXHAUSTER (CRPRE-1) SHALL BE IN OPERATION.

UNOCCUPIED: THE WALL POWER ROOF EXHAUSTER (CRPRE-1) SHALL BE DE-ENERGIZED.

ANYTIME: REVERSE ACTING THERMOSTAT SET AT 85°F. SHALL ENERGIZE EXHAUST FANS TO REMOVE HEAT FROM THE BUILDING AND REDUCE TEMPERATURE INSIDE.

ANYTIME: HUMIDISTAT SET AT 60% RH SHALL ENERGIZE FAN TO RUN ON TIMER FOR 5 MINUTES.

**NOTE: ALL BACKDRAFT DAMPERS ARE GRAVITY DAMPERS. NO POWER REQUIRED TO DAMPERS. ALL FRESH AIR INTAKE DAMPERS SHALL BE MOTORIZED AND SHALL FAIL OPEN.

DESIGN NOTES: THE VENTILATION RATE FOR THIS SPACE IS BASED UPON 10 AIR CHANGES PER HOUR & CONSIDERING EQUIPMENT HEAT GAIN TO THE SPACE AS PROVIDED BY THE ELECTRICAL DESIGNER.

NOTE:

THIS CONTRACTOR SHALL COORDINATE EQUIPMENT LOCATIONS WITH MANUFACTURERS RECOMMENDATIONS, ARCHITECTURAL, STRUCTURAL, PLUMBING, PROCESS & ELECTRICAL DRAWINGS PRIOR TO ORDERING EQUIPMENT AND CONSTRUCTION.

NOTE:

THIS CONTRACTOR SHALL SEAL ALL PENETRATIONS THROUGH WALLS, CEILINGS AND FLOORS WHEN PASSING THROUGH THEM WITH PIPES, ETC. COORDINATE LOCATIONS OF PIPES AND ACCESS DOORS WITH ALL OTHER TRADES PRIOR TO CONSTRUCTION.

HVAC PLAN NOTES:

(1) CONTRACTOR SHALL COORDINATE THE LOCATION OF ALL EQUIPMENT AND PENETRATIONS PRIOR TO BIDDING AND CONSTRUCTION. COORDINATE WITH STRUCTURAL AND ARCHITECTURAL PRIOR TO BIDDING.
(2) REVERSE ACTING THERMOSTAT SET AT 85°F. MOUNT AT 42" ABOVE FINISHED FLOOR.
(3) 16X8 ALL WEATHER LOUVER DRAINABLE BLADE LOUVER WITH MINIMUM FREE AREA OF 0.44 SQ.FT. SEE A SERIES DRAWINGS FOR LOUVER LOCATIONS. LOUVER SHALL BE GREENHECK MODEL ESD-435, CESCO OR APPROVED EQUAL. PROVIDE MOTORIZED DAMPER WITH BLADE SEALS INTERLOCKED WITH CRPRE-1. SEAL AROUND MOUNTING FLANGE AS REQUIRED. COLOR BY OWNER.
(4) HUMIDISTAT SET AT 60% RH. MOUNT AT 42" A.F.F.
(5) DEDICATED SWITCH FOR MANUAL OPERATION, BY E.C.
(6) MOTORIZED DAMPER INTERLOCKED WITH FAN. PROVIDE MOTORIZED DAMPERS WITH BLADE SEALS, INTERLOCKED WITH RESPECTIVE FAN. PROVIDE NEMA 4 ENCLOSURE FOR OPERATOR. (FAIL OPEN).
(7) CONTROL WIRING BY E.C.
(8) INDOOR MINI SPLIT SYSTEM CEILING MOUNTED UNIT. INSTALL IN ACCORDANCE WITH MANUFACTURERS RECOMMENDATIONS.
(9) OUTDOOR HEAT PUMP UNIT TO BE INSTALLED ON WALL BRACKET IN ACCORDANCE WITH MANUFACTURERS RECOMMENDATIONS. MOUNT MINIMUM 8'-0" ABOVE FINISHED GRADE TO BOTTOM.
(10) REFRIGERANT LINE SET TO OUTDOOR HEAT PUMP UNIT. RUN AS HIGH AS POSSIBLE. SEE LOCATION THIS DRAWING.
(11) VERIFY REFRIGERANT LINE SIZES FOR LENGTH OF RUN WITH EQUIPMENT MANUFACTURER PRIOR TO ORDERING. INSULATE REFRIGERANT PIPING WITH MINIMUM 1" AP ARMAFLEX PIPING INSULATION, K-FLEX USA OR APPROVED EQUAL.
(12) RUN REFRIGERANT PIPING THROUGH EXTERIOR WALL TO INDOOR UNIT AS REQUIRED. INSULATE REFRIGERANT PIPING WITH MINIMUM 1" AP ARMAFLEX PIPING INSULATION, K-FLEX USA OR APPROVED EQUAL AND WEATHER SEAL PENETRATION AS REQUIRED.
(13) SECURE EXHAUST FAN TO STRUCTURE AS REQUIRED.
(14) CRPRE-1, CORROSION RESISTANT POWER ROOF EXHAUSTER, SEE SCHEDULE THIS DRAWING. PROVIDE WITH 12" TAPERED INSULATED ROOF CURB AND FLASH IN AS REQUIRED. PROVIDE DUCT STUBBED INTO ROOM. SECURE DUCT AND FAN AS REQUIRED. PROVIDE WITH GRAVITY BACK DRAFT DAMPER AND INSECT SCREEN. FAN SHALL BE INTERLOCKED WITH RESPECTIVE MOTORIZED DAMPERS AS SHOWN. COORDINATE INSTALLATION WITH GENERAL CONTRACTOR AND ROOFING CONTRACTOR. SEE DETAIL THIS DRAWING. CONTROLS AND WIRING BY E.C.
(15) THERMOSTAT MOUNTED AT 42" ABOVE FINISHED FLOOR. VERIFY LOCATION WITH OWNER.
(16) CRHUH-1, CORROSION RESISTANT ELECTRIC HORIZONTAL UNIT HEATER, SEE SCHEDULE THIS DRAWING. MOUNT AT 8'-0" ABOVE FINISHED FL. PROVIDE REMOTE WALL THERMOSTAT MOUNTED AT 42" ABOVE FINISHED FLOOR.
(17) RUN 12"X12" EXHAUST DUCT UP FROM CEILING TO POWER ROOF EXHAUSTER CRPRE-1 ON ROOF AS REQUIRED.
(18) DOOR SWITCH BY E.C. TO ENERGIZE FAN UPON DOOR OPENING.
(19) WALL MOUNTED DEHUMIDIFIER - INTEGRAL HUMIDISTAT, FUNCTIONING RH RANGE 34-95% AT 46-95° F, UP TO 29.5 PPD AT 80°F./60%RH, 120V-1ø, 2.8 RLA, 14.5A RLA, 155 CFM, R134A 190G REFRIGERANT, UNIT SHALL BE AS MANUFACTURED BY INNOVATIVE DE-HUMIDIFIER, MODEL IW25-4 ON WALL DEHUMIDIFIER WITH INTEGRATED CONDENSATE PUMP, OR APPROVED EQUAL. PIPE DRAIN LINE TO SPILL TO GRADE AS REQUIRED.
(20) WALL CAP WITH BACK DRAFT DAMPER AND INSECT SCREEN. TYPICAL.

ABBREVIATIONS

AC	AIR CONDITIONING	HZ	HERTZ
AFF	ABOVE FINISHED FLOOR	IN	INCHES
AHU	AIR HANDLING UNIT	LRA	LOCKED ROTOR AMPS
APPROX	APPROXIMATELY	MAX	MAXIMUM
BLD'G	BUILDING	MBH	THOUSAND BTU'S PER HOUR
BTU	BRITISH THERMAL UNITS	MCA	MINIMUM CIRCUIT AMPS
BTUH	BRITISH THERMAL UNITS PER HOUR	MECH	MECHANICAL
CAP	CAPACITY	MFG	MANUFACTURER
CFM	CUBIC FEET PER MINUTE	MIN	MINIMUM
CL'G	CEILING	MT'D	MOUNTED OR MOUNTING
CONT'D	CONTINUED	NIC	NOT IN CONTRACT
DB	DRY BULB	OA	OUTSIDE AIR
DEG	DEGREE	PC	PLUMBING CONTRACTOR
DIA	DIAMETER	PH OR ø	PHASE
DN	DOWN	QTY	QUANTITY
DWG	DRAWING	REQU'D	REQUIRED
EAT	ENTERING AIR TEMPERATURE	RG	REGISTER
EC	ELECTRICAL CONTRACTOR	RLA	RUNNING LOAD AMPS
EER	ENERGY EFFICIENCY RATING	RPM	REVOLUTIONS PER MINUTE
EF	EXHAUST FAN	SA	SUPPLY AIR
ESP	EXTERNAL STATIC PRESSURE	SEER	SEASONAL ENERGY EFFICIENCY RATING
EXH	EXHAUST	SENS	SENSIBLE
EXIST	EXISTING	SP	STATIC PRESSURE
F	FAHRENHEIT	STAT	THERMOSTAT
FD	FIRE DAMPER	STD	STANDARD
FL	FLOOR	TEMP	TEMPERATURE
FLA	FULL LOAD AMPS	TSP	TOTAL STATIC PRESSURE
GC	GENERAL CONTRACTOR	TYP	TYPICAL
HC	HEATING CONTRACTOR	W	WATTS
HVAC	HEATING VENTILATING AIR CONDITIONING	WB	WET BULB
HP	HORSE POWER		

NOTE: THE ABOVE SCHEDULE IS A STANDARD. THE ABBREVIATIONS DO NOT NECESSARILY APPEAR ON THE DRAWINGS FOR THIS PROJECT.

SYMBOLS

(T)	THERMOSTAT	DS	DOOR SWITCH BY E.C.
	AIR FLOW DIRECTION	(T)	THERMOSTAT
	CEILING EXHAUST FAN	(H)	HUMIDISTAT
	EXHAUST DUCT RISER	(T)R	REVERSE ACTING THERMOSTAT
D.L.	DOOR LOUVER		

Cox Engineering
175 Matamoras Road
Halifax, PA 17032
Phone/Fax: (717)896-8242
Mobile: (717)877-0102
E-Mail: Cox.Engineering@comcast.net

NO.	REVISION	DATE	BY

HRG
Herbert, Rowland & Grubic, Inc
Engineering & Related Services
AN EMPLOYEE-OWNED COMPANY
369 East Park Drive
Harrisburg, PA 17111
(717) 564-1121
Fax (717) 564-1158
hrg@hrg-inc.com
www.hrg-inc.com

HALIFAX AREA
WATER & SEWER AUTHORITY
203 ARMSTRONG STREET
HALIFAX, PA 17032
(717) 896-8063

LENKER ESTATES PUMP STATION
HVAC FLOOR PLAN, NOTES, SCHEDULES & DETAILS
HALIFAX TOWNSHIP SEWER AUTHORITY
HALIFAX TOWNSHIP DAUPHIN COUNTY PENNSYLVANIA

PROJ. MGR. - RAM	
DESIGN-	LEC
CADD-	LEC
CHECKED-	LEC
SCALE-	As indicated
DATE-	08/24/2022

DRAWING NO. H-01
SHEET NO. 90 OF 109
PROJECT 001650.0428

CORROSION RESISTANT ELECTRIC HORIZONTAL UNIT HEATER SCHEDULE

SYMBOL	DESCRIPTION	MFG.	MODEL	KW	VOLTAGE	HP	CONTROL VOLTAGE	AMPS	STAGES	HEATING MBH	CFM	THROW	WEIGHT LBS.	REMARKS
CRHUH-1	HORIZONTAL UNIT HEATER	*QMARK	QWD10212	10.0	240V-1ø	–	24	42.4	2	34.1	1450	–	60	(1) (2) (3)

NOTES:
(1) PROVIDE WITH REMOTE WALL MOUNTED THERMOSTAT MOUNTED AT 42" TO BOTTOM.
(2) PROVIDE WITH MOUNTING BRACKET (HORIZONTAL).
(3) PROVIDE WITH CORROSION RESISTANT CONSTRUCTION AND COATING.

*ALTERNATE INDEECO OR APPROVED EQUAL

CORROSION RESISTANT EXHAUST FAN SCHEDULE

SYMBOL	SERVING	TYPE *	C.F.M.	E.S.P.	R.P.M.	WATTS OR HP	VOLTAGE	REFERENCE MFG.	REFERENCE MODEL NO.	WEIGHT LBS.	REMARKS	RECOMMENDED DUCT SIZE & ROOF OPENING SIZE
CRPRE-1	PUMP ROOM 201	RT	600	0.375"	870	1/4	115/60/1	* GREENHECK	GB-120-4	65	NOTES 1,2,3,4,5,6	DUCT 12X12, ROOF OPENING 19"X19"

C = CEILING MOUNTED RT = ROOF TOP WM = WALL MOUNTED IL = IN-LINE

NOTES:
1. PROVIDE CORROSION RESISTANT CONSTRUCTION WITH MACROPOXY COATING.
2. PROVIDE 12" PITCHED ALUMINUM ROOF CURB.
3. CONTROLLED BY DOOR SWITCH, REVERSE ACTING STAT, HUMDISTAT & SENSORS BY E.C.
4. CONTROLLED BY REVERSE ACTING STAT, HUMDISTAT & OCCUPANCY SENSORS BY E.C.
5. PROVIDE WITH DAMPER TRAY AND BACK-DRAFT DAMPER.
6. PROVIDE WITH INSECT SCREEN.

*ALTERNATE CARNES OR APPROVED EQUAL

EXHAUST FAN SCHEDULE

SYMBOL	SERVING	TYPE *	C.F.M.	E.S.P.	R.P.M.	WATTS OR HP	VOLTAGE	REFERENCE MFG.	REFERENCE MODEL NO.	WEIGHT LBS.	REMARKS
CEF-1	PUMP ROOM 201	C	110	0.20"	950	80W	115/60/1	* GREENHECK	SP-B110	20	NOTE 1,2,3,4,5,

C = CEILING MOUNTED RT = ROOF TOP WM = WALL MOUNTED IL = IN-LINE

NOTES:
1. CONTROLLED BY LIGHT SWITCH.
2. PROVIDE WITH BACK-DRAFT DAMPER.
3. PROVIDE WITH RECTANGULAR WALL CAP WITH INSECT SCREEN.
4. PROVIDE WITH INSECT SCREEN.

* ALTERNATE CARNES OR APPROVED EQUAL

PACKAGED DUCTED MINI SPLIT SYSTEM HEAT PUMP

SYMBOL	MFG.	MODEL NO.	CFM	COOLING CAPACITY TOTAL MBH	COOLING CAPACITY S.E.E.R.	ELECTRICAL CHARACTERISTICS COMPRESSOR R.L.A.	COMPRESSOR L.R.A.	O.D. FAN H.P.	O.D. FAN F.L.A.	POWER SUPPLY MCA	POWER SUPPLY MFA	VOLTAGE	REMARKS
MS-1	MITSUBISHI	PCA-A36KA7	990	–	–	–	–	--	–	–	–	–	(4)
OU-1	MITSUBISHI	PUZ-A36NHA7	–	36.0	19.1	–	–	--	–	–	30	208/230V-1PH	(1) (2) (3) (5)

*ALTERNATE FUJITSU OR EQUAL

REMARKS
(1) UNIT SHALL BE PROVIDED WITH THE FOLLOWING ACCESSORIES: TIME DELAY RELAY, LOW AMBIENT CONTROLLER, WINTER START CONTROL EVAPORATOR DEFROST CONTROL KIT, HIGH LOW PRESSURE CUT-OUT SWITCH AND 8" HIGH SNOW LEGS.
(2) REFRIGERANT LINE SETS SHALL BE SIZED PER MANUFACTURERS RECOMMENDATIONS AND SHALL BE INSULATED WITH 1" AP ARMAFLEX .
(3) WIRED AND INTERLOCKED WITH RESPECTIVE INDOOR UNIT MS-X.
(4) WALL MOUNTED WITH WIRED THERMOSTAT.
(5) PROVIDE WIND BAFFLES FOR LOW AMBIENT COOLING TO 0 DEG. F.

HVAC GENERAL NOTES

1. THIS CONTRACTOR SHALL PERFORM IS WORK IN COMPLIANCE WITH ALL PERTINENT CODES, RULES, ORDINANCES AND REGULATIONS OF ALL STATE, LOCAL AND NATIONAL GOVERNING AUTHORITIES THAT HAVE JURISDICTION OVER THIS BUILDING.
2. DO NOT SCALE DRAWINGS – ALL DIMENSIONS SHALL BE CHECKED AND VERIFIED BY THIS CONTRACTOR. CONTRACTOR SHALL NOTIFY ENGINEER OF ANY DEVIATIONS THAT ARE FOUND BETWEEN THE DRAWINGS AND SITE CONDITIONS.
3. CONTRACTOR SHALL REPORT ALL DISCREPANCIES FOUND IN THE DRAWINGS AND/OR IN THE SPECIFICATIONS FOR CLARIFICATION.
4. THE DRAWINGS ARE DIAGRAMMATIC AND SHOW ONLY THE GENERAL ARRANGEMENT OF ALL DUCTWORK, PIPING AND EQUIPMENT LAYOUT. BECAUSE OF THE SMALL SCALE OF THE DRAWINGS, IT IS NOT POSSIBLE TO SHOW OR INDICATE ALL OFFSETS, FITTINGS AND ACCESSORIES WHICH MAY BE REQUIRED TO AVOID EXISTING PIPING OR STRUCTURAL FEATURES THEREFORE THE CONTRACTOR SHALL PROVIDE WHAT IS REQUIRED TO INSTALL A COMPLETE SYSTEM.
5. ALL DUCTWORK SIZES NOTED ARE FREE AREA SIZES. THE FIRST FIGURE OF THE DUCT SIZE INDICATES THE DIMENSION OF THE FACE SHOWN OR INDICATED. EXHAUST DUCTWORK DOES NOT REQUIRE INSULATION.
6. INSURE THAT ALL EXHAUST, FLUE AND VENTS ARE MINIMUM 10'-0" FROM ALL FRESH AIR INTAKES.
7. HVAC EQUIPMENT SHALL BE CLEANED, LUBRICATED AND HAVE NEW FILTERS INSTALLED PRIOR TO START-UP.
8. ALL DUCTWORK SHALL BE RUN ABOVE CEILING.
9. ALL CUTTING AND PATCHING REQUIRED FOR THIS WORK SHALL BE DONE BY THE GENERAL CONTRACTOR.
10. DUCTWORK AND EQUIPMENT INSTALLATION SHALL BE COORDINATED WITH ALL OTHER TRADES.
11. THIS CONTRACTOR SHALL COORDINATE ALL HVAC POWER REQUIREMENTS WITH THE ELECTRICAL CONTRACTOR.
12. THE CONTRACTOR SHALL INSURE THAT THE ALL-WEATHER LOUVERS INSTALLED FOR FRESH AIR INTAKE DO NOT EXCEED THE WATER PENETRATION VELOCITY.
13. THIS CONTRACTOR SHALL BE RESPONSIBLE FOR CHECKING TRUSS CONFIGURATION WITH EQUIPMENT LOCATIONS AND DUCT LAYOUT, PRIOR TO ORDERING DUCTWORK TO INSURE THAT LAYOUT WILL FIT IN AVAILABLE SPACE. THIS CONTRACTOR SHALL MAKE CHANGES AS REQUIRED WITHOUT COST TO THE OWNER.
14. CAP AND SEAL ALL DUCTWORK, PIPING, FLUES, INTAKES, ETC. UNTIL FINAL CONNECTION IS MADE.
15. DO NOT RUN DUCTWORK OVER ELECTRICAL EQUIPMENT.
16. PROVIDE RECOMMENDED MANUFACTURER CLEARANCES AROUND EQUIPMENT FOR SERVICING AND OPERATION.
17. VERIFY ALL MOUNTING HEIGHTS AND REQUIREMENTS FOR EQUIPMENT WITH EQUIPMENT INSTALLATION REQUIREMENTS, ARCHITECTURAL DRAWINGS, CODE ENFORCEMENT OFFICER AND OWNER.
18. METAL DUCTWORK SHALL BE G90 GALVANIZED SHEET METAL.
19. ELECTRICAL DISCONNECT SWITCHES BY E.C.

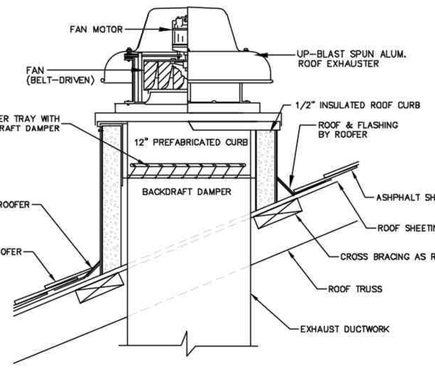

TYPICAL DOWN BLAST EXHAUST FAN DETAIL
NO SCALE

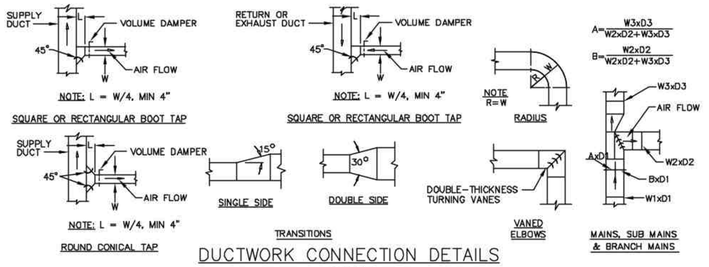

DUCTWORK CONNECTION DETAILS
NO SCALE

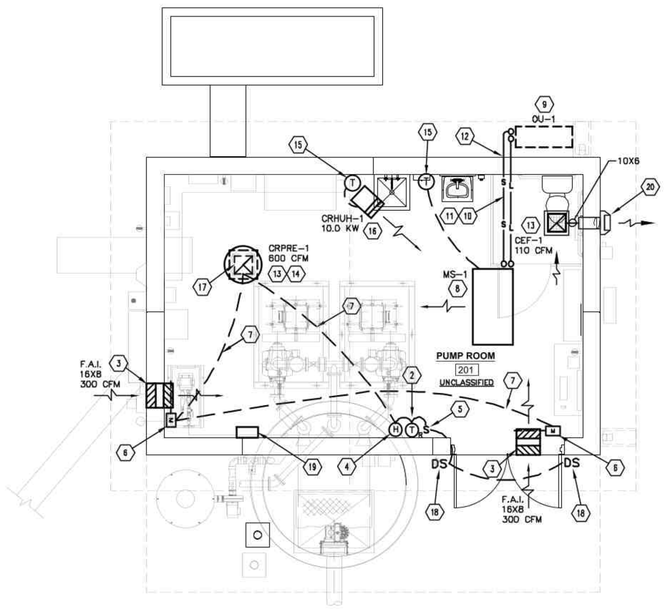

ROADCAP LANE - FLOOR PLAN - HVAC (1)
1/4" = 1'-0"

PUMP/ELECTRICAL ROOM VENTILATION SYSTEM SEQUENCE OF OPERATION

THE SEQUENCE OF OPERATION FOR THIS VENTILATION SYSTEM SHALL BE AS FOLLOWS:

OCCUPIED: THE POWER ROOF EXHAUSTER (CRPRE-1) SHALL BE IN OPERATION.

UNOCCUPIED: THE WALL POWER ROOF EXHAUSTER (CRPRE-1) SHALL BE DE-ENERGIZED.

ANYTIME: REVERSE ACTING THERMOSTAT SET AT 85°F. SHALL ENERGIZE EXHAUST FANS TO REMOVE HEAT FROM THE BUILDING AND REDUCE TEMPERATURE INSIDE.

ANYTIME: HUMIDISTAT SET AT 60% RH SHALL ENERGIZE FAN TO RUN ON TIMER FOR 5 MINUTES.

**NOTE: ALL BACKDRAFT DAMPERS ARE GRAVITY DAMPERS. NO POWER REQUIRED TO DAMPERS. ALL FRESH AIR INTAKE DAMPERS SHALL BE MOTORIZED AND SHALL FAIL OPEN.

DESIGN NOTES: THE VENTILATION RATE FOR THIS SPACE IS BASED UPON 10 AIR CHANGES PER HOUR & CONSIDERING EQUIPMENT HEAT GAIN TO THE SPACE AS PROVIDED BY THE ELECTRICAL DESIGNER.

NOTE:
THIS CONTRACTOR SHALL COORDINATE EQUIPMENT LOCATIONS WITH MANUFACTURERS RECOMMENDATIONS, ARCHITECTURAL, STRUCTURAL, PLUMBING, PROCESS & ELECTRICAL DRAWINGS PRIOR TO ORDERING EQUIPMENT AND CONSTRUCTION.

NOTE:
THIS CONTRACTOR SHALL SEAL ALL PENETRATIONS THROUGH WALLS, CEILINGS AND FLOORS WHEN PASSING THROUGH THEM WITH PIPES, ETC. COORDINATE LOCATIONS OF PIPES AND ACCESS DOORS WITH ALL OTHER TRADES PRIOR TO CONSTRUCTION.

HVAC PLAN NOTES:

(1) CONTRACTOR SHALL COORDINATE THE LOCATION OF ALL EQUIPMENT AND PENETRATIONS PRIOR TO BIDDING AND CONSTRUCTION. COORDINATE WITH STRUCTURAL AND ARCHITECTURAL PRIOR TO BIDDING.
(2) REVERSE ACTING THERMOSTAT SET AT 85°F. MOUNT AT 42" ABOVE FINISHED FLOOR.
(3) 16X8 ALL WEATHER LOUVER DRAINABLE BLADE LOUVER WITH MINIMUM FREE AREA OF 0.44 SQ.FT. SEE A SERIES DRAWINGS FOR LOUVER LOCATIONS. LOUVER SHALL BE GREENHECK MODEL ESD-435, CESCO OR APPROVED EQUAL. PROVIDE MOTORIZED DAMPER WITH BLADE SEALS INTERLOCKED WITH CRPRE-1. SEAL AROUND MOUNTING FLANGE AS REQUIRED. COLOR BY OWNER.
(4) HUMIDISTAT SET AT 60% RH. MOUNT AT 42" A.F.F.
(5) DEDICATED SWITCH FOR MANUAL OPERATION, BY E.C.
(6) MOTORIZED DAMPER INTERLOCKED WITH FAN. PROVIDE MOTORIZED DAMPERS WITH BLADE SEALS, INTERLOCKED WITH RESPECTIVE FAN. PROVIDE NEMA 4 ENCLOSURE FOR OPERATOR. (FAIL OPEN).
(7) CONTROL WIRING BY E.C.
(8) INDOOR MINI SPLIT SYSTEM CEILING MOUNTED UNIT. INSTALL IN ACCORDANCE WITH MANUFACTURERS RECOMMENDATIONS.
(9) OUTDOOR HEAT PUMP UNIT TO BE INSTALLED ON WALL BRACKET IN ACCORDANCE WITH MANUFACTURERS RECOMMENDATIONS. MOUNT MINIMUM 8'-0" ABOVE FINISHED GRADE TO BOTTOM.
(10) REFRIGERANT LINE SET TO OUTDOOR HEAT PUMP UNIT. RUN AS HIGH AS POSSIBLE. SEE LOCATION THIS DRAWING.
(11) VERIFY REFRIGERANT LINE SIZES FOR LENGTH OF RUN WITH EQUIPMENT MANUFACTURER PRIOR TO ORDERING. INSULATE REFRIGERANT PIPING WITH MINIMUM 1" AP ARMAFLEX PIPING INSULATION, K-FLEX USA OR APPROVED EQUAL.
(12) RUN REFRIGERANT PIPING THROUGH EXTERIOR WALL TO INDOOR UNIT AS REQUIRED. INSULATE REFRIGERANT PIPING WITH MINIMUM 1" AP ARMAFLEX PIPING INSULATION, K-FLEX USA OR APPROVED EQUAL AND WEATHER SEAL PENETRATION AS REQUIRED.
(13) SECURE EXHAUST FAN TO STRUCTURE AS REQUIRED.
(14) CRPRE-1, CORROSION RESISTANT POWER ROOF EXHAUSTER, SEE SCHEDULE THIS DRAWING. PROVIDE WITH 12" TAPERED INSULATED ROOF CURB AND FLASH IN AS REQUIRED. PROVIDE DUCT STUBBED INTO ROOM. SECURE DUCT AND FAN AS REQUIRED. PROVIDE WITH GRAVITY BACK DRAFT DAMPER AND INSECT SCREEN. FAN SHALL BE INTERLOCKED WITH RESPECTIVE MOTORIZED DAMPERS AS SHOWN. COORDINATE INSTALLATION WITH GENERAL CONTRACTOR AND ROOFING CONTRACTOR. SEE DETAIL THIS DRAWING. CONTROLS AND WIRING BY E.C.
(15) THERMOSTAT MOUNTED AT 42" ABOVE FINISHED FLOOR. VERIFY LOCATION WITH OWNER.
(16) CRHUH-1, CORROSION RESISTANT ELECTRIC HORIZONTAL UNIT HEATER. SEE SCHEDULE THIS DRAWING. MOUNT AT 8'-0" ABOVE FINISHED FL. PROVIDE REMOTE WALL THERMOSTAT MOUNTED AT 42" ABOVE FINISHED FLOOR.
(17) RUN 12"X12" EXHAUST DUCT UP FROM CEILING TO POWER ROOF EXHAUSTER CRPRE-1 ON ROOF AS REQUIRED.
(18) DOOR SWITCH BY E.C. TO ENERGIZE FAN UPON DOOR OPENING.
(19) WALL MOUNTED DEHUMIDIFIER – INTEGRAL HUMIDISTAT, FUNCTIONING RH RANGE 34-95% AT 46-95° F., UP TO 29.5 PPD AT 80°F./80%RH, 120V-1ø, 2.8 RLA, 14.5A RLA, 155 CFM, R134A 190G REFRIGERANT, UNIT SHALL BE AS MANUFACTURED BY INNOVATIVE DE-HUMIDIFIER, MODEL IW25-4 ON WALL DEHUMIDIFIER WITH INTEGRATED CONDENSATE PUMP, OR APPROVED EQUAL. PIPE DRAIN LINE TO SPILL TO GRADE AS REQUIRED.
(20) WALL CAP WITH BACK DRAFT DAMPER AND INSECT SCREEN. TYPICAL.

ABBREVIATIONS

AC	AIR CONDITIONING	HZ	HERTZ
AFF	ABOVE FINISHED FLOOR	IN	INCHES
AHU	AIR HANDLING UNIT	LRA	LOCKED ROTOR AMPS
APPROX	APPROXIMATELY	MAX	MAXIMUM
BLD'G	BUILDING	MBH	THOUSAND BTU'S PER HOUR
BTU	BRITISH THERMAL UNITS	MCA	MINIMUM CIRCUIT AMPS
BTUH	BRITISH THERMAL UNITS PER HOUR	MECH	MECHANICAL
CAP	CAPACITY	MFG	MANUFACTURER
CFM	CUBIC FEET PER MINUTE	MIN	MINIMUM
CL'G	CEILING	MT'D	MOUNTED OR MOUNTING
CONT'D	CONTINUED	NIC	NOT IN CONTRACT
DB	DRY BULB	OA	OUTSIDE AIR
DEG	DEGREE	PC	PLUMBING CONTRACTOR
DIA	DIAMETER	PH OR ø	PHASE
DN	DOWN	QTY	QUANTITY
DWG	DRAWING	REQ'D	REQUIRED
EAT	ENTERING AIR TEMPERATURE	RG	REGISTER
EC	ELECTRICAL CONTRACTOR	RLA	RUNNING LOAD AMPS
EER	ENERGY EFFICIENCY RATING	RPM	REVOLUTIONS PER MINUTE
EF	EXHAUST FAN	SA	SUPPLY AIR
ESP	EXTERNAL STATIC PRESSURE	SEER	SEASONAL ENERGY EFFICIENCY RATING
EXH	EXHAUST	SENS	SENSIBLE
EXIST	EXISTING	SP	STATIC PRESSURE
F	FAHRENHEIT	STAT	THERMOSTAT
FD	FIRE DAMPER	STD	STANDARD
FL	FLOOR	TEMP	TEMPERATURE
FLA	FULL LOAD AMPS	TSP	TOTAL STATIC PRESSURE
GC	GENERAL CONTRACTOR	TYP	TYPICAL
HC	HEATING CONTRACTOR	W	WATTS
HVAC	HEATING VENTILATING AIR CONDITIONING	WB	WET BULB
HP	HORSE POWER		

NOTE: THE ABOVE SCHEDULE IS A STANDARD. THE ABBREVIATIONS DO NOT NECESSARILLY APPEAR ON THE DRAWINGS FOR THIS PROJECT.

SYMBOLS

(T)	THERMOSTAT	DS	DOOR SWITCH BY E.C.
	AIR FLOW DIRECTION	(T)	THERMOSTAT
	CEILING EXHAUST FAN	(H)	HUMIDISTAT
	EXHAUST DUCT RISER	(T)R	REVERSE ACTING THERMOSTAT
D.L.	DOOR LOUVER		

Cox Engineering
175 Matamoras Road
Halifax, PA 17032
Phone/Fax: (717)896-8242
Mobile: (717)877-0102
E-Mail: Cox.Engineering@comcast.net

NO.	REVISION	DATE	BY

COMMONWEALTH OF PENNSYLVANIA REGISTERED PROFESSIONAL LARRY EUGENE COX, JR ENGINEER

HRG
Herbert, Rowland & Grubic, Inc
Engineering & Related Services
AN EMPLOYEE-OWNED COMPANY
369 East Park Drive
Harrisburg, PA 17111
(717) 564-1121
Fax (717) 564-1158
hrg@hrg-inc.com
www.hrg-inc.com

HALIFAX AREA
WATER & SEWER AUTHORITY
203 ARMSTRONG STREET
HALIFAX, PA 17032
(717) 896-8063

ROADCAP LANE PUMP STATION
HVAC FLOOR PLAN, NOTES, SCHEDULES & DETAILS
HALIFAX TOWNSHIP SEWER AUTHORITY
HALIFAX TOWNSHIP DAUPHIN COUNTY PENNSYLVANIA

PROJ. MGR. - RAM	
DESIGN-	LEC
CADD-	LEC
CHECKED-	LEC
SCALE-	As indicated
DATE-	08/24/2022

DRAWING NO. H-02
SHEET NO. 91 OF 109
PROJECT 001650.0428

PLUMBING GENERAL NOTES:

1. EXACT LOCATION OF PLUMBING FIXTURES SHALL BE DETERMINED FROM ARCHITECTURAL DRAWINGS.
2. CONTRACTOR SHALL VERIFY INVERT ELEVATIONS FOR DISCHARGE INTO WET WELL PRIOR TO CONSTRUCTION.
3. CONTRACTOR SHALL VERIFY AND COORDINATE LOCATION OF ALL PLUMBING LINES WITH DUCTWORK AND ELECTRICAL SERVICES.
4. THE INSTALLATION OF ALL VALVES, UNIONS, THERMOMETERS, GAUGES, OR OTHER INDICATING OR RECORDING EQUIPMENT, OR SPECIALTIES REQUIRING FREQUENT READING, REPAIRS, ADJUSTMENT, INSPECTION, REMOVAL OR REPLACEMENT SHALL BE CONVENIENTLY AND ACCESSIBLY LOCATED WITH REFERENCE TO THE FINISHED BUILDING.
5. ALL VENTS THROUGH ROOF SHALL BE 10'-0" REMOVED FROM ALL AIR INTAKES.
6. WHERE POSSIBLE, TIE THE VENTS TOGETHER SO THAT A MINIMUM NUMBER TERMINATE THROUGH THE ROOF.
7. CONTRACTOR SHALL NOT CUT HOLES IN STRUCTURAL MEMBERS WITHOUT FIRST SECURING WRITTEN APPROVAL FROM THE ARCHITECT.
8. CONTRACTOR SHALL INSTALL DIELECTRIC UNIONS AT CONNECTIONS OF DISSIMILAR METALS.
9. CONTRACTOR SHALL ROUGH-IN ALL WASTES AND SUPPLIES TO SPECIAL EQUIPMENT ACCORDING TO MANUFACTURERS SHOP DRAWINGS AND MAKE FINAL CONNECTIONS. ALL SUPPLIES SHALL BE VALVED.
10. ALL HOT & COLD WATER PIPING RUN OUTS SHALL BE 1/2" UNLESS OTHERWISE NOTED.
11. ALL HOT & COLD WATER DISTRIBUTION PIPING FEEDING MORE THAN ONE FIXTURE SHALL BE NO LESS THAN 3/4" UNLESS OTHERWISE NOTED.
12. ALL DOMESTIC WATER PIPING SHALL BE INSULATED IN ACCORDANCE WITH CURRENT IECC CODE.

    ALL PIPING SHALL BE SECURED AS REQUIRED.
13. ALL PIPING SHALL BE RUN EXPOSED INSIDE THE BUILDING UNLESS OTHERWISE DIRECTED BY OWNER.
14. PROVIDE TRENCHING AND CLEAN BACKFILL AS REQUIRED.
15. INSTALL SUFFICIENT UNIONS IN PIPING SYSTEMS TO ALLOW SERVICE OF ANY CONNECTED EQUIPMENT WITHOUT BREAKING FITTINGS OR CUTTING PIPING.
16. DO NOT RUN PIPING OVER ELECTRICAL EQUIPMENT.
17. PROVIDE SUFFICIENT CLEARANCE FOR MAINTENANCE AND OPERATION FOR PLUMBING EQUIPMENT.
18. PROVIDE SHUT-OFF VALVES FOR ALL DOMESTIC WATER CONNECTIONS TO FIXTURES AND EQUIPMENT.
19. PROVIDE CONDENSATE DRAINS WITH TRAPS FOR HVAC EQUIPMENT.
20. TRAP GUARDS MAY BE USED FOR FLOOR DRAINS IF APPROVED BY OWNER AND LOCAL AUTHORITY. IF APPROVED, ELIMINATE ALL 1/2" DROPS, PRIMERS AND UNDER FLOOR PIPING TO FLOOR DRAIN TRAPS AS REQUIRED.

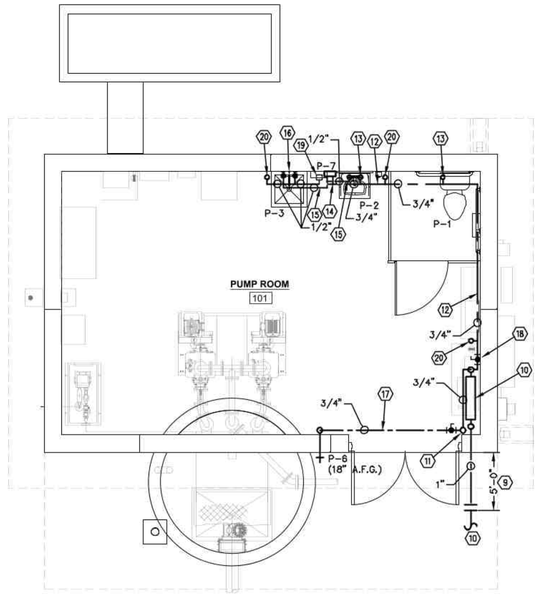

LENKER ESTATES - FLOOR PLAN - DOMESTIC WATER PIPING
1/4" = 1'-0"

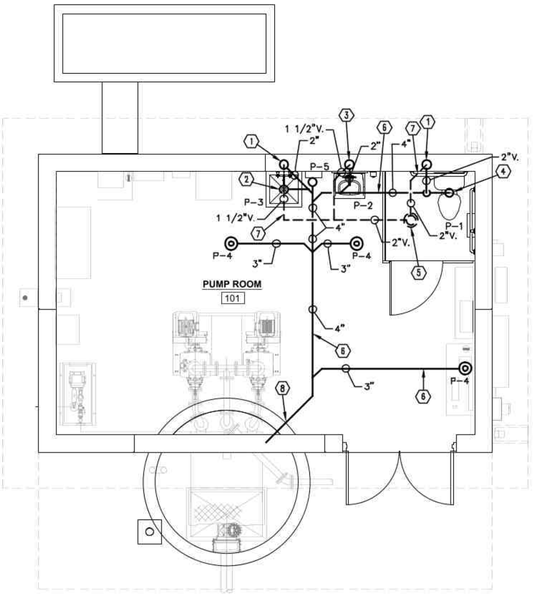

LENKER ESTATES - FLOOR PLAN - SANITARY WASTE & VENT PIPING
1/4" = 1'-0"

PLAN NOTES:

1. 2" VENT RISER.
2. 2" WASTE.
3. 2" WASTE & 1 1/2"V.
4. 4" WASTE.
5. 3" VENT TO 4" VENT THRU ROOF.
6. SANITARY LATERAL RUN BELOW FLOOR SLAB.
7. VENT PIPING RUN IN ATTIC.
8. SANITARY DRAIN TO DISCHARGE INTO WET WELL. COORDINATE WITH PROCESS CONTRACTOR FOR INVERT AND PENETRATION THROUGH SIDE WALL OF WET WELL PRIOR TO CONSTRUCTION.
9. P.C. SHALL PROVIDE WORK TO 5'-0" OUTSIDE BUILDING.
10. 1" DOMESTIC WATER SERVICE TO BUILDING. THIS CONTRACTOR SHALL PROVIDE WORK TO 5'-0" OUTSIDE THE BUILDING. PROVIDE DOUBLE CHECK BACKFLOW PREVENTOR ASSEMBLY WITH QUARTER TURN FULL PORT BALL SHUT-OFF VALVES BOTH SIDES. SEE DETAIL THIS DRAWING.
11. 3/4" DOMESTIC COLD WATER UP TO CEILING AND RUN ACROSS CEILING TO DROP DOWN TO P-6 AS REQUIRED. LABEL PIPING AND SECURE AS REQUIRED.
12. DOMESTIC COLD WATER PIPING RUN EXPOSED ON WALL 6" ABOVE FINISHED FLOOR. LABEL PIPING AND SECURE AS REQUIRED.
13. 1/2" DOMESTIC COLD WATER UP TO FIXTURE AS REQUIRED.
14. 1/2" DOMESTIC COLD WATER UP TO P-7, INSTANTANEOUS WATER HEATER, AS REQUIRED.
15. 1/2" DOMESTIC HOT WATER PIPING RUN EXPOSED ON WALL 16" ABOVE FINISHED FLOOR. LABEL PIPING AND SECURE AS REQUIRED.
16. RUN 1/2" HOT AND 1/2" COLD WATER EXPOSED ON WALL AS REQUIRED TO CONNECT TO MOP SINK FAUCET. MOP SINK FAUCET SHALL BE SURFACE MOUNTED ON WALL WITH BRACE SECURED TO WALL AS REQUIRED.
17. RUN WATER PIPING ACROSS CEILING AND SECURE AS REQUIRED.
18. QUARTER TURN FULL PORT BALL SHUT-OFF VALVES. TYPICAL.
19. SHOCK ARRESTOR. TYPICAL.
20. 1/2" COLD WATER TO TRAP PRIMER(S) FOR FLOOR DRAIN TRAP(S). INSTALL TRAP PRIMER IN AN ACCESSIBLE LOCATION. RUN PIPING DOWN INTO SLAB AND RUN TO TRAP AS REQUIRED. TRAP GUARDS MAY BE USED IN LIEU OF TRAP PRIMERS IF APPROVED IN ADVANCE BY AUTHORITY HAVING JURISDICTION. IF TRAP GUARDS ARE APPROVED, ELIMINATE THE DOMESTIC WATER TO THE TRAPS.

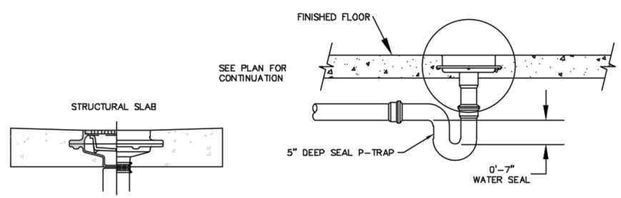

** COORDINATE LOCATIONS AND FLOOR SLOPES WITH ARCHITECTURAL PLANS.

TYPICAL FLOOR DRAIN DETAIL
NO SCALE

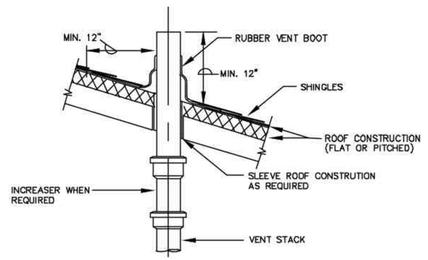

TYPICAL VENT THRU ROOF DETAIL
NO SCALE

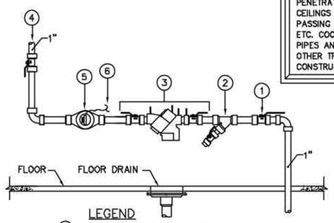

LEGEND
1. BALL VALVE, (FULL PORT).
2. STRAINER WITH DRAIN AND SHUT-OFF VALVE.
3. REDUCED PRESSURE BACKFLOW PREVENTER.
4. 1" COLD WATER PIPE RISER
5. WATER METER WITH REMOTE READER
6. REMOTE READER LOCATION TO BE COORDINATED WITH WATER COMPANY.

1. COORDINATE METER, BACKFLOW PREVENTERS, & PIPING INSTALLATION W/ WATER AUTHORITY PRIOR TO CONSTRUCTION. PROVIDE ACCESS TO VALVES ETC. AND INSTALL REMOTE READER AS REQUIRED.
2. P.C. SHALL PROVIDE ALL SUPPORTS, DEVICES AND NECESSARY EQUIPMENT ASSOCIATED WITH DOMESTIC WATER SERVICE.

TYPICAL DOMESTIC WATER SERVICE DETAIL
NO SCALE

NOTE:
THIS CONTRACTOR SHALL SEAL ALL PENETRATIONS THROUGH WALLS, CEILINGS AND FLOORS WHEN PASSING THROUGH THEM WITH PIPES, ETC. COORDINATE LOCATIONS OF PIPES AND ACCESS DOORS WITH ALL OTHER TRADES PRIOR TO CONSTRUCTION.

NOTE:
THIS CONTRACTOR SHALL COORDINATE ALL WORK WITH ALL OTHER TRADES, ARCHITECTURAL, STRUCTURAL, HVAC AND ELECTRICAL FOR EQUIPMENT LOCATIONS, UTILITY REQUIREMENTS AND LOCATIONS PRIOR TO BIDDING AND CONSTRUCTION.

NOTE:
THIS CONTRACTOR SHALL COORDINATE EQUIPMENT LOCATIONS WITH MANUFACTURERS RECOMMENDATIONS, ARCHITECTURAL, STRUCTURAL, HVAC, PROCESS & ELECTRICAL DRAWINGS PRIOR TO ORDERING EQUIPMENT AND CONSTRUCTION.

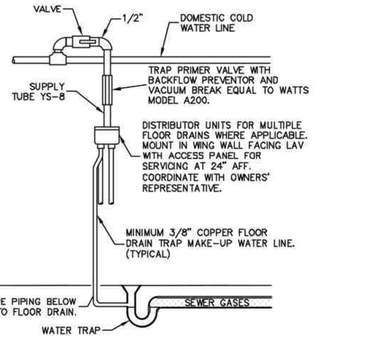

NOTE: TRAP PRIMER VALVE SHALL BE MOUNTED ONE FOOT ABOVE THE FINISHED FLOOR FOR EVERY 20 FEET OF PRIME LINE.

TYPICAL FLOOR DRAIN TRAP PRIMER DETAIL
NO SCALE

PLUMBING FIXTURE SCHEDULE

FIXTURE NO.	FIXTURE NAME	DESCRIPTION	H.W.	C.W.	WASTE	VENT	SPECIFICATIONS
P-1	WATER CLOSET ♿	FLOOR MT'D. FLUSH TANK	--	1 1/2"	4"	2"	KOHLER "HIGHLINE" MODEL K-3493, ELONGATED BOWL, 1.4 GALLON FLUSH, WITH TRIP LEVER, SUPPLIES, STOPS, TRAPS AND ESCUTCHEONS. SEAT SHALL BE SPLIT, COLORS AND FINISHES SHALL BE SPECIFIED BY ARCHITECT.
P-2	LAVATORY ♿	WALL HUNG	1/2"	1/2"	2"	1 1/2"	KOHLER "CHESAPEAK" MODEL K-1728, WALL HUNG LAVATORY WITH K-15240 FAUCET WITH LEVER HANDLES. PROVIDE SUPPLIES, STOPS, TRAP AND ESCUTCHEONS AS REQUIRED FOR COMPLETE INSTALLATION. COLOR BY ARCHITECT. PROVIDE PIPE COVERS BY TRUEBRO FOR ADA REQUIREMENTS.
P-3	MOP SINK	24X24 MOLDED STONE	1/2"	1/2"	2"	1 1/2"	MOP SINK, 24x24 MOLDED STONE AS MANUFACTURED BY FIAT MODEL MSB-2424, WITH WALL GUARD, 832-AA HOSE & BRACKET, 1239 BB - ALUMINUM BUMPER GUARD, 889 CC MOP BRACKET AND 830 AA SERVICE FAUCET.
P-4	FLOOR DRAIN	6" STRAINER	--	--	3"	--	ZURN MODEL Z-742-VP WITH INTEGRAL TRAP, CLEANOUT, BALL FLOAT TYPE BACKWATER VALVE AND VANDAL PROOF SECURED SLOTTED GRATE. ARCHITECT TO SPECIFY NICKEL BRONZE OR BRONZE FINISH.
P-5	CLEANOUT	INTERIOR	--	--	FULL SIZE	--	ZURN MODEL Z-1400, ADJUSTABLE FLOOR CLEANOUT. FULL SIZE OF LATERAL, ARCHITECT TO SPECIFY NICKEL BRONZE OR BRONZE FINISH.
P-6	HYDRANT	NON-FREEZE	--	3/4"	--	--	ZURN Z-1310 EXPOSED, NON FREEZE, ANTI-SIPHON, AUTOMATIC DRAINING. LOCKABLE VALVE HANDLE OR KEY REQUIRED FOR OPERATION. WITH INTEGRAL NON-FREEZE BACKFLOW PREVENTOR AND MEETS IPC 2015 TABLE 608.1, ASSE 1019 APPROVED.
P-7	WATER HEATER	INSTANTANEOUS	1/2"	1/2"	--	--	INSTANTANEOUS WATER HEATER FOR MOP SINK & LAVATORY. EEMAX PROSERIES MODEL PRO11240, 11.0 KW @ 240V-1ø, 46 AMP DRAW, TEMPERATURE RISE 50° F. @ 1.5 GPM, PROVIDE 0.5 GPM AERATOR FOR BOTH MOP SINK AND LAVATORY AS REQUIRED..

NOTES:
THESE ARE THE ACCEPTABLE EQUIVALENT SUBSTITUTIONS OR EQUAL:
1. AS MANUFACTURED BY WADE FOR ZURN PRODUCTS.
2. AS MANUFACTURED BY AMERICAN STANDARD FOR KOHLER FIXTURES.
3. AS MANUFACTURED BY A.O.SMITH FOR STATE WATER HEATERS.
4. AS MANUFACTURED BY RHEEM FOR EEMAX.
5. AS MANUFACTURED BY AMERICAN VALVE FOR WOODFORD.

♿ INDICATES PLUMBING FIXTURE IS TO BE ADA COMPLIANT. (VERIFY LOCATIONS WITH ARCHITECTURAL PLANS)

ABBREVIATIONS

AFF	ABOVE FINISHED FLOOR	GPM	GALLONS PER MINUTE
APPROX	APPROXIMATELY	HC	HEATING CONTRACTOR
ATC	AUTO TEMP CONTROL	HVAC	HEATING VENTILATING AIR CONDITIONING
BTU	BRITISH THERMAL UNITS	HP	HORSE POWER
BTUH	BRITISH THERMAL UNITS PER HOUR	HW	HOT WATER
CAP	CAPACITY	MAX	MAXIMUM
CFM	CUBIC FEET PER MINUTE	MFG	MANUFACTURER
CO	CLEANOUT	MIN	MINIMUM
CW	COLD WATER	M'TD	MOUNTED OR MOUNTING
DEG	DEGREE	PC	PLUMBING CONTRACTOR
DIA	DIAMETER	RLA	RUNNING LOAD AMPS
DWG	DRAWING	SS	STAINLESS STEEL
EC	ELECTRICAL CONTRACTOR	STD	STANDARD
EXH	EXHAUST	SW	SAFETY WASTE
F	FAHRENHEIT	TEMP	TEMPERATURE
FLA	FULL LOAD AMPS	TYP	TYPICAL
GC	GENERAL CONTRACTOR	VR	VENT RISER
		VTR	VENT-THRU-ROOF
		W	WATTS

NOTE: THE ABOVE SCHEDULE IS A STANDARD, THE ABBREVIATIONS DO NOT NECESSARILY APPEAR ON THE DRAWINGS FOR THIS PROJECT.

SYMBOLS

- BALL VALVE
- SHOCK ABSORBER
- UNION
- CHECK VALVE
- SANITARY SEWER PIPING
- VENT PIPING
- COLD WATER PIPING
- HOT WATER PIPING
- SEWER CLEANOUT

Cox Engineering
175 Matamoras Road
Halifax, PA 17032
Phone/Fax: (717)896-8242
Mobile: (717)877-0102
E-Mail: Cox.Engineering@comcast.net

NO.	REVISION	DATE	BY

COMMONWEALTH OF PENNSYLVANIA
REGISTERED PROFESSIONAL
LARRY EUGENE COX, JR
ENGINEER

HRG
Herbert, Rowland & Grubic, Inc
Engineering & Related Services
AN EMPLOYEE-OWNED COMPANY
369 East Park Drive
Harrisburg, PA 17111
(717) 564-1121
Fax (717) 564-1158
hrg@hrg-inc.com
www.hrg-inc.com

HALIFAX AREA
WATER & SEWER AUTHORITY
203 ARMSTRONG STREET
HALIFAX, PA 17032
(717) 896-8063

LENKER ESTATES PUMP STATION

PLUMBING FLOOR PLAN, SYMBOLS, ABBREVIATIONS, SCHEDULES, NOTES & DETAILS

HALIFAX TOWNSHIP DAUPHIN COUNTY PENNSYLVANIA

PROJ. MGR. -	RAM
DESIGN-	LEC
CADD-	LEC
CHECKED-	LEC
SCALE-	As indicated
DATE-	08/24/2022

DRAWING NO. P-01
SHEET NO. 92 OF 109
PROJECT 001650.0428

PLUMBING GENERAL NOTES:

1. EXACT LOCATION OF PLUMBING FIXTURES SHALL BE DETERMINED FROM ARCHITECTURAL DRAWINGS.
2. CONTRACTOR SHALL VERIFY INVERT ELEVATIONS FOR DISCHARGE INTO WET WELL PRIOR TO CONSTRUCTION.
3. CONTRACTOR SHALL VERIFY AND COORDINATE LOCATION OF ALL PLUMBING LINES WITH DUCTWORK AND ELECTRICAL SERVICES.
4. THE INSTALLATION OF ALL VALVES, UNIONS, THERMOMETERS, GAUGES, OR OTHER INDICATING OR RECORDING EQUIPMENT, OR SPECIALTIES REQUIRING FREQUENT READING, REPAIRS, ADJUSTMENT, INSPECTION, REMOVAL OR REPLACEMENT SHALL BE CONVENIENTLY AND ACCESSIBLY LOCATED WITH REFERENCE TO THE FINISHED BUILDING.
5. ALL VENTS THROUGH ROOF SHALL BE 10'-0" REMOVED FROM ALL AIR INTAKES.
6. WHERE POSSIBLE, TIE THE VENTS TOGETHER SO THAT A MINIMUM NUMBER TERMINATE THROUGH THE ROOF.
7. CONTRACTOR SHALL NOT CUT HOLES IN STRUCTURAL MEMBERS WITHOUT FIRST SECURING WRITTEN APPROVAL FROM THE ARCHITECT.
8. CONTRACTOR SHALL INSTALL DIELECTRIC UNIONS AT CONNECTIONS OF DISSIMILAR METALS.
9. CONTRACTOR SHALL ROUGH-IN ALL WASTES AND SUPPLIES TO SPECIAL EQUIPMENT ACCORDING TO MANUFACTURERS SHOP DRAWINGS AND MAKE FINAL CONNECTIONS. ALL SUPPLIES SHALL BE VALVED.
10. ALL HOT & COLD WATER PIPING RUN OUTS SHALL BE 1/2" UNLESS OTHERWISE NOTED.
11. ALL HOT & COLD WATER DISTRIBUTION PIPING FEEDING MORE THAN ONE FIXTURE SHALL BE NO LESS THAN 3/4" UNLESS OTHERWISE NOTED.
12. ALL DOMESTIC WATER PIPING SHALL BE INSULATED IN ACCORDANCE WITH CURRENT IECC CODE.

    ALL PIPING SHALL BE SECURED AS REQUIRED.
13. ALL PIPING SHALL BE RUN EXPOSED INSIDE THE BUILDING UNLESS OTHERWISE DIRECTED BY OWNER.
14. PROVIDE TRENCHING AND CLEAN BACKFILL AS REQUIRED.
15. INSTALL SUFFICIENT UNIONS IN PIPING SYSTEMS TO ALLOW SERVICE OF ANY CONNECTED EQUIPMENT WITHOUT BREAKING FITTINGS OR CUTTING PIPING.
16. DO NOT RUN PIPING OVER ELECTRICAL EQUIPMENT.
17. PROVIDE SUFFICIENT CLEARANCE FOR MAINTENANCE AND OPERATION FOR PLUMBING EQUIPMENT.
18. PROVIDE SHUT-OFF VALVES FOR ALL DOMESTIC WATER CONNECTIONS TO FIXTURES AND EQUIPMENT.
19. PROVIDE CONDENSATE DRAINS WITH TRAPS FOR HVAC EQUIPMENT.
20. TRAP GUARDS MAY BE USED FOR FLOOR DRAINS IF APPROVED BY OWNER AND LOCAL AUTHORITY. IF APPROVED, ELIMINATE ALL 1/2" DROPS, PRIMERS AND UNDER FLOOR PIPING TO FLOOR DRAIN TRAPS AS REQUIRED.

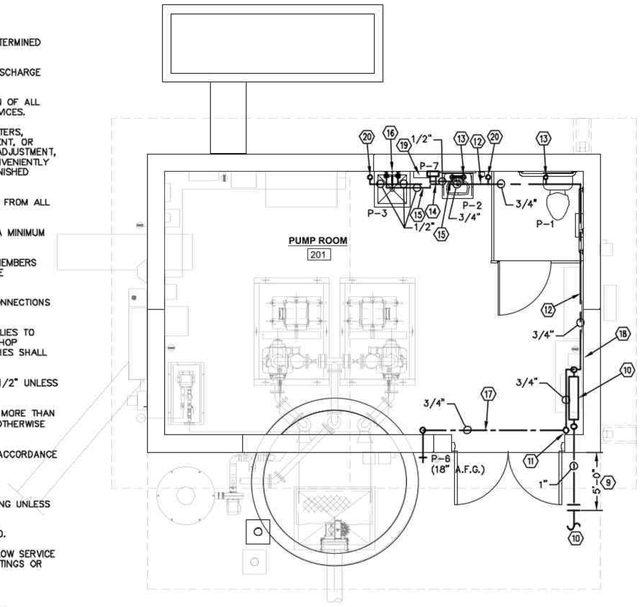

ROADCAP LANE - FLOOR PLAN - DOMESTIC WATER PIPING
1/4" = 1'-0"

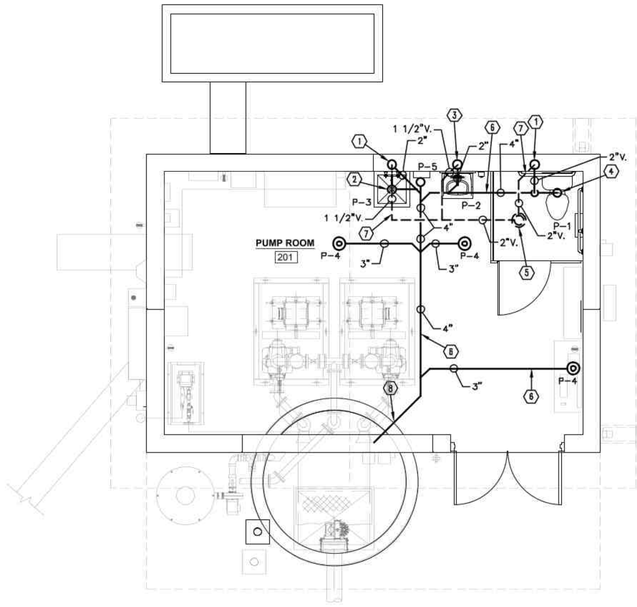

ROADCAP LANE - FLOOR PLAN - SANITARY WASTE & VENT PIPING
1/4" = 1'-0"

PLAN NOTES:

1. 2" VENT RISER.
2. 2" WASTE.
3. 2" WASTE & 1 1/2"V.
4. 4" WASTE.
5. 3" VENT TO 4" VENT THRU ROOF.
6. SANITARY LATERAL RUN BELOW FLOOR SLAB.
7. VENT PIPING RUN IN ATTIC.
8. SANITARY DRAIN TO DISCHARGE INTO WET WELL. COORDINATE WITH PROCESS CONTRACTOR FOR INVERT AND PENETRATION THROUGH SIDE WALL OF WET WELL PRIOR TO CONSTRUCTION.
9. P.C. SHALL PROVIDE WORK TO 5'-0" OUTSIDE BUILDING.
10. 1" DOMESTIC WATER SERVICE TO BUILDING. THIS CONTRACTOR SHALL PROVIDE WORK TO 5'-0" OUTSIDE THE BUILDING. PROVIDE DOUBLE CHECK BACKFLOW PREVENTOR ASSEMBLY WITH QUARTER TURN FULL PORT BALL SHUT-OFF VALVES BOTH SIDES. SEE DETAIL THIS DRAWING.
11. 3/4" DOMESTIC COLD WATER UP TO CEILING AND RUN ACROSS CEILING TO DROP DOWN TO P-6 AS REQUIRED. LABEL PIPING AND SECURE AS REQUIRED.
12. DOMESTIC COLD WATER PIPING RUN EXPOSED ON WALL 6" ABOVE FINISHED FLOOR. LABEL PIPING AND SECURE AS REQUIRED.
13. 1/2" DOMESTIC COLD WATER UP TO FIXTURE AS REQUIRED.
14. 1/2" DOMESTIC COLD WATER UP TO P-7, INSTANTANEOUS WATER HEATER, AS REQUIRED.
15. 1/2" DOMESTIC HOT WATER PIPING RUN EXPOSED ON WALL 16" ABOVE FINISHED FLOOR. LABEL PIPING AND SECURE AS REQUIRED.
16. RUN 1/2" HOT AND 1/2" COLD WATER EXPOSED ON WALL AS REQUIRED TO CONNECT TO MOP SINK FAUCET. MOP SINK FAUCET SHALL BE SURFACE MOUNTED ON WALL WITH BRACE SECURED TO WALL AS REQUIRED.
17. RUN WATER PIPING ACROSS CEILING AND SECURE AS REQUIRED.
18. QUARTER TURN FULL PORT BALL SHUT-OFF VALVES. TYPICAL.
19. SHOCK ARRESTOR. TYPICAL.
20. 1/2" COLD WATER TO TRAP PRIMER(S) FOR FLOOR DRAIN TRAP(S). INSTALL TRAP PRIMER IN AN ACCESSIBLE LOCATION. RUN PIPING DOWN INTO SLAB AND RUN TO TRAP AS REQUIRED. TRAP GUARDS MAY BE USED IN LIEU OF TRAP PRIMERS IF APPROVED IN ADVANCE BY AUTHORITY HAVING JURISDICTION. IF TRAP GUARDS ARE APPROVED, ELIMINATE THE DOMESTIC WATER TO THE TRAPS.

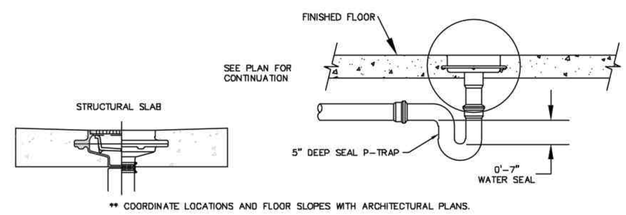

** COORDINATE LOCATIONS AND FLOOR SLOPES WITH ARCHITECTURAL PLANS.

TYPICAL FLOOR DRAIN DETAIL
NO SCALE

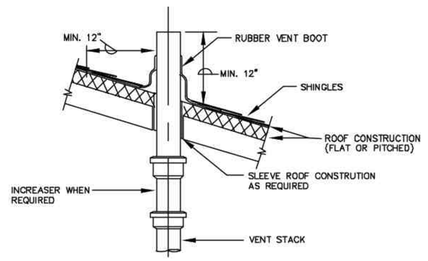

TYPICAL VENT THRU ROOF DETAIL
NO SCALE

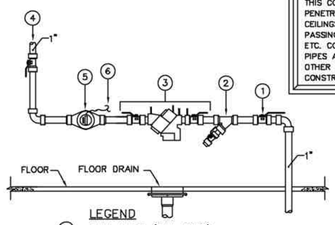

LEGEND
1. BALL VALVE, (FULL PORT).
2. STRAINER WITH DRAIN AND SHUT-OFF VALVE.
3. REDUCED PRESSURE BACKFLOW PREVENTER.
4. 1" COLD WATER PIPE RISER
5. WATER METER WITH REMOTE READER
6. REMOTE READER LOCATION TO BE COORDINATED WITH WATER COMPANY.

1. COORDINATE METER, BACKFLOW PREVENTERS, & PIPING INSTALLATION W/ WATER AUTHORITY PRIOR TO CONSTRUCTION. PROVIDE ACCESS TO VALVES ETC. AND INSTALL REMOTE READER AS REQUIRED.
2. P.C. SHALL PROVIDE ALL SUPPORTS, DEVICES AND NECESSARY EQUIPMENT ASSOCIATED WITH DOMESTIC WATER SERVICE.

TYPICAL DOMESTIC WATER SERVICE DETAIL
NO SCALE

NOTE:
THIS CONTRACTOR SHALL SEAL ALL PENETRATIONS THROUGH WALLS, CEILINGS AND FLOORS WHEN PASSING THROUGH THEM WITH PIPES, ETC. COORDINATE LOCATIONS OF PIPES AND ACCESS DOORS WITH ALL OTHER TRADES PRIOR TO CONSTRUCTION.

NOTE:
THIS CONTRACTOR SHALL COORDINATE ALL WORK WITH ALL OTHER TRADES, ARCHITECTURAL, STRUCTURAL, HVAC AND ELECTRICAL FOR EQUIPMENT LOCATIONS, UTILITY REQUIREMENTS AND LOCATIONS PRIOR TO BIDDING AND CONSTRUCTION.

NOTE:
THIS CONTRACTOR SHALL COORDINATE EQUIPMENT LOCATIONS WITH MANUFACTURERS RECOMMENDATIONS, ARCHITECTURAL, STRUCTURAL, HVAC, PROCESS & ELECTRICAL DRAWINGS PRIOR TO ORDERING EQUIPMENT AND CONSTRUCTION.

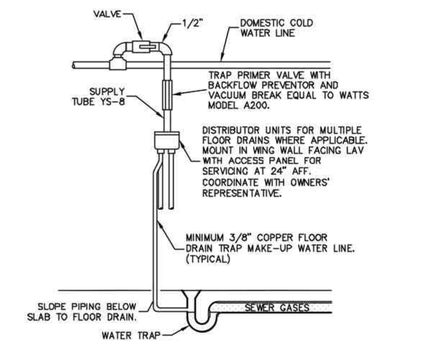

NOTE: TRAP PRIMER VALVE SHALL BE MOUNTED ONE FOOT ABOVE THE FINISHED FLOOR FOR EVERY 20 FEET OF PRIME LINE.

TYPICAL FLOOR DRAIN TRAP PRIMER DETAIL
NO SCALE

PLUMBING FIXTURE SCHEDULE

FIXTURE NO.	FIXTURE NAME	DESCRIPTION	H.W.	C.W.	WASTE	VENT	SPECIFICATIONS
P-1	WATER CLOSET ♿	FLOOR MT'D. FLUSH TANK	--	1 1/2"	4"	2"	KOHLER "HIGHLINE" MODEL K-3493, ELONGATED BOWL, 1.4 GALLON FLUSH, WITH TRIP LEVER, SUPPLIES, STOPS, TRAPS AND ESCUTCHEONS. SEAT SHALL BE SPLIT, COLORS AND FINISHES SHALL BE SPECIFIED BY ARCHITECT.
P-2	LAVATORY ♿	WALL HUNG	1/2"	1/2"	2"	1 1/2"	KOHLER "CHESAPEAK" MODEL K-1728, WALL HUNG LAVATORY WITH K-15240 FAUCET WITH LEVER HANDLES. PROVIDE SUPPLIES, STOPS, TRAP AND ESCUTCHEONS AS REQUIRED FOR COMPLETE INSTALLATION. COLOR BY ARCHITECT. PROVIDE PIPE COVERS BY TRUEBRO FOR ADA REQUIREMENTS.
P-3	MOP SINK	24X24 MOLDED STONE	1/2"	1/2"	2"	1 1/2"	MOP SINK, 24x24 MOLDED STONE AS MANUFACTURED BY FIAT MODEL MSB-2424, WITH WALL GUARD, 832-AA HOSE & BRACKET, 1239 BB - ALUMINUM BUMPER GUARD, 889 CC MOP BRACKET AND 830 AA SERVICE FAUCET.
P-4	FLOOR DRAIN	6" STRAINER	--	--	3"	--	ZURN MODEL Z-742-VP WITH INTEGRAL TRAP, CLEANOUT, BALL FLOAT TYPE BACKWATER VALVE AND VANDAL PROOF SECURED SLOTTED GRATE. ARCHITECT TO SPECIFY NICKEL BRONZE OR BRONZE FINISH.
P-5	CLEANOUT	INTERIOR	--	--	FULL SIZE	--	ZURN MODEL Z-1400, ADJUSTABLE FLOOR CLEANOUT. FULL SIZE OF LATERAL, ARCHITECT TO SPECIFY NICKEL BRONZE OR BRONZE FINISH.
P-6	HYDRANT	NON-FREEZE	--	3/4"	--	--	ZURN Z-1310 EXPOSED, NON FREEZE, ANTI-SIPHON, AUTOMATIC DRAINING. LOCKABLE VALVE HANDLE OR KEY REQUIRED FOR OPERATION. WITH INTEGRAL NON-FREEZE BACKFLOW PREVENTOR AND MEETS IPC 2015 TABLE 608.1, ASSE 1019 APPROVED.
P-7	WATER HEATER	INSTANTANEOUS	1/2"	1/2"	--	--	INSTANTANEOUS WATER HEATER FOR MOP SINK & LAVATORY. EEMAX PROSERIES MODEL PRO11240, 11.0 KW @ 240V-1ø, 46 AMP DRAW, TEMPERATURE RISE 50° F. @ 1.5 GPM, PROVIDE 0.5 GPM AERATOR FOR BOTH MOP SINK AND LAVATORY AS REQUIRED..

NOTES:
THESE ARE THE ACCEPTABLE EQUIVALENT SUBSTITUTIONS OR EQUAL:
1. AS MANUFACTURED BY WADE FOR ZURN PRODUCTS.
2. AS MANUFACTURED BY AMERICAN STANDARD FOR KOHLER FIXTURES.
3. AS MANUFACTURED BY A.O.SMITH FOR STATE WATER HEATERS.
4. AS MANUFACTURED BY RHEEM FOR EEMAX.
5. AS MANUFACTURED BY AMERICAN VALVE FOR WOODFORD.

♿ INDICATES PLUMBING FIXTURE IS TO BE ADA COMPLIANT. (VERIFY LOCATIONS WITH ARCHITECTURAL PLANS)

ABBREVIATIONS

AFF	ABOVE FINISHED FLOOR	GPM	GALLONS PER MINUTE
APPROX	APPROXIMATELY	HC	HEATING CONTRACTOR
ATC	AUTO TEMP CONTROL	HVAC	HEATING VENTILATING AIR CONDITIONING
BTU	BRITISH THERMAL UNITS	HP	HORSE POWER
BTUH	BRITISH THERMAL UNITS PER HOUR	HW	HOT WATER
CAP	CAPACITY	MAX	MAXIMUM
CFM	CUBIC FEET PER MINUTE	MFG	MANUFACTURER
CO	CLEANOUT	MIN	MINIMUM
CW	COLD WATER	MTD	MOUNTED OR MOUNTING
DEG	DEGREE	PC	PLUMBING CONTRACTOR
DIA	DIAMETER	RLA	RUNNING LOAD AMPS
DWG	DRAWING	SS	STAINLESS STEEL
EC	ELECTRICAL CONTRACTOR	STD	STANDARD
EXH	EXHAUST	SW	SAFETY WASTE
F	FAHRENHEIT	TEMP	TEMPERATURE
FLA	FULL LOAD AMPS	TYP	TYPICAL
GC	GENERAL CONTRACTOR	VR	VENT RISER
		VTR	VENT-THRU-ROOF
		W	WATTS

NOTE: THE ABOVE SCHEDULE IS A STANDARD, THE ABBREVIATIONS DO NOT NECESSARILY APPEAR ON THE DRAWINGS FOR THIS PROJECT.

SYMBOLS

- BALL VALVE
- SHOCK ABSORBER
- UNION
- CHECK VALVE
- SANITARY SEWER PIPING
- VENT PIPING
- COLD WATER PIPING
- HOT WATER PIPING
- SEWER CLEANOUT

Cox Engineering
175 Matamoras Road
Halifax, PA 17032
Phone/Fax: (717)896-8242
Mobile: (717)877-0102
E-Mail: Cox.Engineering@comcast.net

NO.	REVISION	DATE	BY

COMMONWEALTH OF PENNSYLVANIA REGISTERED PROFESSIONAL LARRY EUGENE COX, JR ENGINEER

HRG
Herbert, Rowland & Grubic, Inc
Engineering & Related Services
AN EMPLOYEE-OWNED COMPANY
369 East Park Drive
Harrisburg, PA 17111
(717) 564-1121
Fax (717) 564-1158
hrg@hrg-inc.com
www.hrg-inc.com

HALIFAX AREA
WATER & SEWER AUTHORITY
203 ARMSTRONG STREET
HALIFAX, PA 17032
(717) 896-8063

ROADCAP LANE PUMP STATION

PLUMBING FLOOR PLAN, SYMBOLS, ABBREVIATIONS, SCHEDULES, NOTES & DETAILS

HALIFAX TOWNSHIP DAUPHIN COUNTY PENNSYLVANIA

PROJ. MGR. - RAM	
DESIGN-	LEC
CADD-	LEC
CHECKED-	LEC
SCALE-	As indicated
DATE-	08/24/2022

DRAWING NO. P-02
SHEET NO. 93 OF 109
PROJECT 001650.0428

LIGHTING MOUNTING AS NOTED

SYMBOL	DESCRIPTION
	CEILING MOUNTED LED FIXTURE; LETTER INSIDE OR BESIDE DENOTES FIXTURE TYPE
	CEILING MOUNTED LED LIGHTING FIXTURE, WIRED FOR NORMAL/STANDBY POWER OPERATION; LETTER INSIDE OR BESIDE FIXTURE DENOTES FIXTURE TYPE
	WALL MOUNTED LED FIXTURE
	CEILING MOUNTED LED FIXTURE
	WALL MOUNTED LED FIXTURE
	POLE STANDARD LIGHT FIXTURE UNIT – SINGLE ARM
	POLE STANDARD LIGHT FIXTURE UNIT – DOUBLE ARM
	POLE LANTERN TYPE LIGHT FIXTURE UNIT
	EXIT SIGN
	EXIT SIGN (DOUBLE FACE)
	EXIT SIGN WITH DIRECTIONAL ARROW
	EMERGENCY BATTERY PACK UNIT
	REMOTE HEAD FOR EMERGENCY BATTERY PACK UNIT

SWITCHING

SYMBOL	MOUNTING	DESCRIPTION
S	48"AFF	SWITCH, SINGLE POLE
S_2	48"AFF	SWITCH, DPDT
S_3	48"AFF	SWITCH, 3–WAY
S_4	48"AFF	SWITCH, 4–WAY
S_D	48"AFF	SWITCH, DIMMER
S_P	48"AFF	SWITCH WITH PILOT LIGHT
S_M	48"AFF	SWITCH, MANUAL MOTOR STARTER, RATING AND THERMAL OVERLOADS TO MATCH MOTOR NAME PLATE DATA
S_{MXP}	48" AFF	EXPLOSION PROOF SWITCH, MANUAL MOTOR STARTER, RATING AND THERMAL OVERLOADS TO MATCH MOTOR NAME PLATE DATA
S_{MI}	48"AFF	SWITCH, MANUAL MOTOR STARTER WITH IVORY, ILLUMINATED HANDLE
S_{MP}	48"AFF	SWITCH, MANUAL MOTOR STARTER WITH PILOT LIGHT
S_T	48"AFF	MANUAL MOTOR STARTER SWITCH FRACTIONAL HORSEPOWER
S_{XP}	48"AFF	SWITCH, EXPLOSION PROOF, NEMA 7/4X
	AS NOTED	PHOTOELECTRIC CONTROL
R1 ← DESIGNATION	48"AFF	LIGHTING CONTACTOR
LC–1 ← REPRESENTS LIGHTING CONTACTOR BEING CONTROLLED		LIGHTING CONTACTOR REMOTE PUSH–BUTTON "ON–OFF" CONTROL
DS	AS NOTED	DOOR SWITCH
MC	AS NOTED	MOTION CONTROL
M	CEILING	MOTION SENSOR
OS	CEILING	OCCUPATION SENSOR

PANELBOARDS

SYMBOL	MOUNTING	DESCRIPTION
	TOP BREAKER 6'–0"AFF	NEW PANELBOARD – SURFACE MOUNTED
	TOP BREAKER 6'–0"AFF	NEW PANELBOARD – FLUSH MOUNTED
	---	EXISTING PANELBOARD – SURFACE MOUNTED
	---	EXISTING PANELBOARD – FLUSH MOUNTED

INTRUSION ALARM SYSTEM

SYMBOL	MOUNTING	DESCRIPTION
D	AS NOTED	INTRUSION ALARM MAGNETIC DOOR CONTACTS
K	48"AFF	INTRUSION ALARM KEY PAD
M	AS NOTED	INTRUSION ALARM MOTION DETECTOR
D EXP	AS NOTED	INTRUSION ALARM MAGNETIC DOOR CONTACTS, EXPLOSION PROOF
	AS NOTED	INTRUSION ALARM BELL
IACP	48"AFF	INTRUSION ALARM CONTROL PANEL

TELECOMMUNICATION

SYMBOL	MOUNTING	DESCRIPTION
AD	AS NOTED	AUTO DIALER
#	36"AFF	PHONE PORT (# = NUMBER OF VOICE PORTS)
#	36"AFF	DATA PORT (# = NUMBER OF DATA PORTS)
# #	36"AFF	COMBINATION DATA/PHONE PORT (# = NUMBER OF DATA PORTS/VOICE PORTS)
#	FLOOR	PHONE PORT– FLOOR BOX–FLUSH (# = NUMBER OF DATA PORTS/VOICE PORTS)

POWER

SYMBOL	MOUNTING	DESCRIPTION
USB WP C	36"AFF	DUPLEX RECEPTACLE, 20A RATED FOOTNOTE DELINEATES SPECIFIC DEVICE

C – DENOTES MOUNTED 6" ABOVE COUNTERTOP
WP – REQUIREMENT – SEE ABBREVIATIONS
USB – DENOTES USB IN RECEPTACLE

SYMBOL	MOUNTING	DESCRIPTION
	36"AFF	SPECIAL PURPOSE OUTLET (SIZE INDICATED ON PLANS)
	36"AFF	SINGLE RECEPTACLE, 20A RATED
	36"AFF	DUPLEX RECEPTACLE–FLUSH–WITH GROUND FAULT CIRCUIT INTERRUPTER
	36"AFF	DOUBLE DUPLEX RECEPTACLE, 20A RATED
	18"AFF	DUPLEX RECEPTACLE–FLUSH–TRANSIENT VOLTAGE SURGE SUPPRESSION TYPE (TVSS)
	FLOOR	DUPLEX RECEPTACLE– FLOOR BOX–FLUSH
	FLOOR TVSS	DUPLEX RECEPTACLE– FLOOR BOX–FLUSH–TRANSIENT VOLTAGE SURGE SUPPRESSION TYPE (TVSS)
	FLOOR TVSS	COMBINATION DUPLEX RECEPTACLE (TVSS)/VOICE OUTLET PORT– (# DESIGNATES NUMBER OF VOICE PORTS) – FLOOR BOX–FLUSH
MSE ← DESIGNATION	48"AFF	COMBINATION DISCONNECT SWITCH/MOTOR STARTER
	AS NOTED	MOTOR (HORSEPOWER INDICATED ON PLANS)
J	AS NOTED	JUNCTION BOX
T T–1 ← DESIGNATION		TRANSFORMER
CM	AS NOTED	CIRCUIT MONITOR
VR 2	AS NOTED	VOLTAGE REGULATOR
TVSS	AS NOTED	TRANSIENT VOLTAGE SURGE SUPPRESSION
	48"AFF	EMERGENCY POWER SHUT–OFF SWITCH
H	48"AFF	LOCKABLE ON–OFF–AUTO SELECTOR SWITCH W/RED INDICATOR LIGHT
DSA ← DESIGNATION	48"AFF	DISCONNECT SWITCH
480V 50KVA 120V (SIZE, VOLTAGES)		TRANSFORMER
		SHIELDED ISOLATION TYPE TRANSFORMER
C		COUNTER TOP POWER STRIP
		FVNR STARTER

DUCTBANK SYMBOL KEY

①⑤⑦ ②⑥
- NEW CONDUIT, TYP.
- EXISTING CONDUIT, TYP.

NOTE: REFER TO DUCTBANK SCHEDULE & PLANS FOR EXACT NUMBER & SIZE OF CONDUITS.

FIRE ALARM SYSTEM

SYMBOL	MOUNTING U.O.N.	DESCRIPTION
FACP	48"AFF	FIRE ALARM CONTROL PANEL
FAA	AS NOTED	FIRE ALARM ANNUNCIATOR
A	AS NOTED	FIRE ALARM AUDIBLE/VISIBLE SIGNAL WALL MOUNTED AT 6'–8" A.F.F. OR 6" BELOW CEILING; WHICHEVER IS LOWER
F	48"AFF	FIRE ALARM MANUAL PULL STATION
S	CEILING	FIRE ALARM SMOKE DETECTOR
H	CEILING	FIRE ALARM HEAT DETECTOR, FIXED TYPE
A EXP	AS NOTED	FIRE ALARM AUDIBLE ALARM, EXPLOSION PROOF WALL MOUNTED AT 6'–8" A.F.F. OR 6" BELOW CEILING; WHICHEVER IS LOWER
V EXP	AS NOTED	FIRE ALARM VISIBLE ALARM, EXPLOSION PROOF, WALL MOUNTED AT 6'–8" A.F.F. OR 6" BELOW CEILING; WHICHEVER IS LOWER
F EXP	48"AFF	FIRE ALARM MANUAL PULL STATION, EXPLOSION PROOF
H EXP	CEILING	FIRE ALARM HEAT DETECTOR, FIXED TYPE, EXPLOSION PROOF
TS	48"AFF	FIRE SUPPRESSION SYSTEM TAMPER SWITCH
FS	48"AFF	FIRE SUPPRESSION SYSTEM FLOW SWITCH
PS	48"AFF	FIRE SUPPRESSION SYSTEM PRESSURE SWITCH

HVAC

SYMBOL	MOUNTING	DESCRIPTION
M	AS NOTED	MOTOR OPERATED DAMPER
	AS NOTED	UNIT HEATER
T	48"AFF	THERMOSTAT; FURNISHED AND INSTALLED UNDER DIVISION 15 WIRED UNDER DIVISION 16

CONDUIT FEEDERS AND BRANCH CIRCUITS

SYMBOL	DESCRIPTION
—E——E—	OVERHEAD ELECTRIC SERVICE
—PE——PE—	OVERHEAD PRIMARY ELECTRIC SERVICE
—SE——SE—	OVERHEAD SECONDARY ELECTRIC SERVICE
—T——T—	OVERHEAD TELEPHONE SERVICE
—FO——FO—	OVERHEAD FIBER OPTIC
—CTV——CTV—	OVERHEAD TELEVISION SERVICE
	CONDUIT – EMBEDDED IN FLOOR OR EARTH
—EU—	UNDERGROUND ELECTRIC SERVICE
—PEU—	UNDERGROUND PRIMARY ELECTRIC SERVICE
—SEU—	UNDERGROUND SECONDARY ELECTRIC SERVICE
—TU—	UNDERGROUND TELEPHONE SERVICE
—FOU—	UNDERGROUND FIBER OPTIC
—CTVU—	UNDERGROUND TELEVISION SERVICE
	CONDUIT – IN WALL, CEILING OR EXPOSED
—XX——XX—	CONDUIT WITH IDENTIFIER
	CONDUIT TURNED UP
	CONDUIT TURNED DOWN
	CONDUIT CAPPED
	BRANCH CIRCUIT WIRING
	CIRCUIT HOME RUN
1 ← CIRCUIT NUMBER	IN–LINE HOME RUN
—E——E—	EMERGENCY ONLY CIRCUIT
—NE——NE—	NORMAL EMERGENCY CIRCUIT
—//—	DEVICES ON SAME CIRCUIT, SEPARATELY CONTROLLED
F2	ELECTRIC FEEDER LEGEND INDICATION

TYPICAL ANNOTATION

SYMBOL	DESCRIPTION
X CIRDESCRIPTION	DRAWING KEYNOTE
X CIRDESCRIPTION	DEMOLITION KEYNOTE
	REVISION TAG
	REVISION CLOUD
AAA ###	INSTRUMENTATION TAG
CGMDP–701	PROCESS EQUIPMENT TAG
X X HEXDESCRIPTION	HVAC EQUIPMENT TAG
4X	AREA NEMA DESIGNATION TAG

PROCESS & INSTRUMENTATION LEGEND

CIRCUIT TAG DESCRIPTIONS:

SBRCP300–15: 8 (4) #14 3/4"

- PANEL
- CIRCUIT NUMBER IN PANEL
- CONDUIT SIZE
- SIZE OF CONDUCTORS
- # OF SPARE CONDUCTORS
- # OF ACTIVE CONDUCTORS

ADD FOR TOTAL # OF CONDUCTORS (EX. 8 + 4 = 12 TOTAL CONDUCTORS)

PROCESS EQUIPMENT TAGGING

B–100A

- PROCESS SUB AREA
- DEVICE NUMBER
- SUB–DEVICE NUMBER
- PROCESS MAIN AREA
- EQUIPMENT

EQUIPMENT:

AC	AIR COMPRESSOR	MX	MIXER	CP	CONTROL PANEL	SV	SOLENOID VALVE
B	BLOWER	P	PUMP	D	DECANTER	T	TANK
C	COMMINUTOR	S	SAMPLER	DPC	DEFINITE PURPOSE CONTACTOR	V	VALVE
CFD	CHEMICAL FEEDER	SC	SCREEN	G	GRINDER	ZS	POSITION SWITCH

ABBREVIATIONS

A OR AMP	AMPERE	GFCI	GROUND FAULT CIRCUIT INTERRUPTER	NPT	NOMINAL PIPE THREADS
A.C.	ALTERNATING CURRENT	GND. or GRD	GROUND	OE	OVERHEAD ELECTRIC
AF	FRAME AMPERE	H.I.D.	HIGH INTENSITY DISCHARGE	P	# OF POLES IN CIRCUIT BREAKER
A.F.F.	ABOVE FINISHED FLOOR	HP	HORSEPOWER	PH or ø	PHASE
A.F.G.	ABOVE FINISHED GRADE	H.P.S.	HIGH PRESSURE SODIUM	PM	POWER MONITOR
A.I.C.	AMPERE INTERRUPTING CURRENT	HSPS	HIGH SERVICE PUMP STATION	PMT	PAD MOUNTED TRANSFORMER
AS	AMMETER SELECTOR SWITCH	HVAC	HEAT–VENT–AIR CONDITIONING	PNL	PANEL
AT	TRIP AMPERE	I.G.	ISOLATED GROUND	PSI	POUNDS PER SQUARE INCH
A.T.S.	AUTOMATIC TRANSFER SWITCH	I.D.	INNER DIAMETER	PT	POTENTIAL TRANSFORMER
AUTO	AUTOMATIC	IMC	INTERMEDIATE METAL CONDUIT	PVC	POLYVINYL CHLORIDE
AWG	AMERICAN WIRE GAUGE	IND.	INDUSTRIAL	QTY.	QUANTITY
B.F.G.	BELOW FINISHED GRADE	JB	JUNCTION BOX	RGS	RIGID GALVANIZED STEEL
BLDG.	BUILDING	J.I.C.	JOINT INDUSTRIAL COUNCIL	RVSS	REDUCED VOLTAGE SOLID STATE
C	COUNTERTOP RECEPTACLE	KA	KILOAMPERE	SC	SURGE CAPACITOR
C. or COND.	CONDUIT	KCMIL	1000 CIRCULAR MILS	SCC	SYSTEM CONTROL CENTER
CB	CIRCUIT BREAKER	KV	KILOVOLT	SER	SERVICE ENTRANCE RATED
CKT	CIRCUIT	KVA	KILOVOLT AMPERE	SM	SUB–METER
CP	CONTROL PANEL	KW	KILOWATT	SP	SPARE
CPT	CONTROL PANEL TRANSFORMER	LA	LIGHTNING ARRESTOR	S.S.	STAINLESS STEEL
CR	CONTROL RELAY	LC	LIGHTING CONTACTOR	SWBD	SWITCHBOARD
DESIG	DESIGNATION	LTG	LIGHTING	TBA	TO BE ABANDONED
DIA.	DIAMETER	MAX	MAXIMUM	TBR	TO BE REMOVED
DIV.	DIVISION	MCB	MAIN CIRCUIT BREAKER	TCC	TELECOMMUNICATIONS CLOSET
DPDT	DOUBLE POLE, DOUBLE THROW	mA	MILI–AMP	TDC	TELECOMMUNICATIONS DISTRIBUTION CLOSET
DS	DISCONNECT SWITCH	MC	MANUFACTURER'S CABLE	TVSS	TRANSIENT VOLTAGE SURGE SUPPRESSION
E.C.	ELECTRICAL CONTRACTOR	MCC	MOTOR CONTROL CENTER	TYP.	TYPICAL
EHH	ELECTRIC HANDHOLE	MFR	MANUFACTURER	UE	UNDERGROUND ELECTRIC
EMH	ELECTRIC MANHOLE	MIN.	MINIMUM	UH	UNIT HEATER
EP	EXPLOSION PROOF	M.L.O.	MAIN LUG ONLY	UL	UNDERWRITERS LABORATORY
E.T.R.	EXISTING TO REMAIN	M.O.D.	MOTOR OPERATED DAMPER	U.O.N.	UNLESS OTHERWISE NOTED
EUH	ELECTRIC UNIT HEATER	MS	MOTOR STARTER	UE	UNDERGROUND ELECTRIC
E.W.	EACH WAY	MTD.	MOUNTED	UT	UNDERGROUND TELEPHONE
EX	EXAMPLE	N/A	NOT APPLICABLE	UV	ULTRAVIOLET
EXH	EXHAUST FAN	N.C.	NORMALLY CLOSED	V	VOLT
FU	FUSE	NEMA	NATIONAL ELECTRICAL MANUFACTURER'S ASSOCIATION	VAC	VOLTS ALTERNATING CIRCUIT
FRE	FIBERGLASS REINFORCED EPOXY	NID	NETWORK INTERFACE DEVICE (4 POSITION)	VS	VOLTMETER SELECTOR SWITCH
G.C.	GENERAL CONTRACTOR	N.O.	NORMALLY OPEN	W	WIRE
GEN	GENERATOR	No.	NUMBER	WP	WEATHERPROOF
				XFMR	TRANSFORMER

INSTRUMENT & FUNCTION TAGGING

LLL NNNa

- LLL = FUNCTIONAL INSTRUMENT IDENTIFICATION LETTERS FROM INSTRUMENT IDENTIFICATION TABLE.
- a = LETTER SUFFIX TO DISTINGUISH BETWEEN INSTRUMENTS IN LOOP WITH SAME FUNCTIONAL IDENTIFICATION. (USED AS REQ'D.)
- NNN = LOOP NUMBER

NOTE:

THE ABOVE LIST OF SYMBOLS AND ABBREVIATIONS ARE STANDARD. ALL SYMBOLS AND ABBREVIATIONS ARE NOT NECESSARILY USED ON THIS PROJECT.

GENERAL NOTES:

A. DRAWINGS ARE DIAGRAMMATIC IN NATURE, CONTRACTOR SHALL VERIFY DIMENSIONS PRIOR TO INSTALLATION CONTRACTOR SHALL COORDINATE ALL WORK WITH OTHER DIVISION TRADES TO PROVIDE A COMPLETE AND OPERABLE SYSTEM. LOCATE FIXTURES, DEVICES, ETC. IN ORDER TO AVOID INTERFERENCES.

B. ALL WORK SHALL BE PERFORMED AS REQUIRED BY APPLICABLE SECTION OF THE NATIONAL ELECTRICAL CODE, LATEST EDITION, AND ALL GOVERNING LOCAL CODES, LAWS, AND/OR REGULATIONS

C. SYSTEM AND EQUIPMENT GROUNDING CONTINUITY SHALL BE ASSURED AS REQUIRED BY APPLICABLE SECTIONS OF THE NATIONAL ELECTRICAL CODE.

D. ALL WIRING SHALL BE TYPE "THHN–THWN" U.O.N.; MINIMUM WIRING SHALL BE #12 (POWER WIRE). ALL WIRE SHALL BE COPPER. MINIMUM CONDUIT SIZE FOR METALLIC CONDUIT TO BE 3/4" AND 1" FOR PVC.

E. ALL CIRCUIT PROTECTIVE DEVICES SHALL HAVE THE REQUIRED RATING INTERRUPTING CAPACITY EQUAL TO OR GREATER THAN THE AVAILABLE SHORT–CIRCUIT CURRENT AT ITS SUPPLY TERMINAL; MINIMUM INTERRUPTING CAPACITY. SHALL BE 10,000 AMPS, SYMMETRICAL A.I.C. FOR 120/208V SYSTEMS AND 14,000 AMPS, SYMMETRICAL A.I.C. FOR 277/480V SYSTEMS. REFER TO PANEL SCHEDULES FOR A.I.C. RATINGS.

F. ALL OUTDOOR EXPOSED CONDUIT TO BE RGS TRANSITION FROM UNDERGROUND TO EXPOSED SHALL BE RGS.

G. ALL UNDERGROUND CONDUITS TO BE SCHEDULE 40 PVC UNLESS OTHERWISE INDICATED. ALL CONDUITS SHALL INCLUDE A NYLON PULL CORD.

INSTRUMENT IDENTIFICATION TABLE

ISA–S5.1–1984

LETTER	FIRST LETTER		SUCCEEDING LETTERS		
	MEASURED OR INITIATING VARIABLE	MODIFIER	READOUT OR PASSIVE FUNCTION	OUTPUT FUNCTION	MODIFIER
A	ANALYSIS (2)		ALARM		
B	BURNER, COMBUSTION			CLOSE, STOP, DECREASE (1)	OFF (1)
C				CONTROL	
D		DIFFERENTIAL		OPEN, START, INCREASE (1)	
E	VOLTAGE		SENSOR (PRIMARY ELEMENT)		ENABLED (1)
F	FLOW RATE	RATIO (FRACTION)			FAIL (1)
G			GLASS, VIEWING DEVICE		
H	HAND				HIGH (OPENED)
I	CURRENT (ELECTRICAL)		INDICATE		
J	POWER	SCAN			
K	TIME, TIME SCHEDULE	TIME RATE OF CHANGE		CONTROL STATION	
L	LEVEL		LIGHT		LOW (CLOSED)
M	MOTOR, MOTION (1)	MOMENTARY		MOTOR (1)	MIDDLE OR INTERMEDIATE
N					ON OR OPERATE (1)
O			ORIFICE, RESTRICTION		OVERLOAD (1)
P	PRESSURE, VACUUM		POINT (TEST) CONNECTION	PUMP (1)	
Q	QUANTITY (2)	INTEGRATE, TOTALIZE			
R	RADIATION		RECORD		
S	SPEED, FREQUENCY	SAFETY OR SOLENOID		SWITCH	
T	TEMPERATURE			TRANSMIT	
U	MULTIVARIABLE (2)		MULTIFUNCTION (2)	MULTIFUNCTION (2)	MULTIFUNCTION (2)
V	VIBRATION, MECHANICAL ANALYSIS			VALVE, DAMPER, LOUVER	
W	WEIGHT, FORCE		WELL		
X	UNCLASSIFIED, (2)		UNCLASSIFIED (2)	UNCLASSIFIED (2)	UNCLASSIFIED (2)
Y	EVENT, STATE, PRESENCE			RELAY, COMPUTE, CONVERT	
Z	POSITION, DIMENSION			DRIVER, ACTUATOR, UNCLASSIFIED FINAL CONTROL ELEMENT	

(1) USER'S CHOICE
(2) WHEN USED, SYMBOL OR SIGNAL LINE IS INDICATED.

NO.	REVISION	DATE	BY

COMMONWEALTH OF PENNSYLVANIA REGISTERED PROFESSIONAL MATTHEW DANIEL MOORE ENGINEER No. PE74935

9/1/22

HRG
Herbert, Rowland & Grubic, Inc.
Engineering & Related Services
AN EMPLOYEE-OWNED COMPANY
369 East Park Drive
Harrisburg, PA 17111
(717) 564-1121
Fax (717) 564-1158
hrg@hrg-inc.com
www.hrg-inc.com

HALIFAX AREA
WATER AND SEWER AUTHORITY
203 ARMSTRONG STREET
HALIFAX, PA 17032
(717) 896-8083

NOTES, ABBREVIATIONS AND SYMBOLS
FOR
HALIFAX TWP. SANITARY SEWER EXTENSION PROJECT
HALIFAX TOWNSHIP DAUPHIN COUNTY PENNSYLVANIA

PROJ. MGR. – JJM
DESIGN– NMH
CADD– DNC
CHECKED–MDM
SCALE– AS NOTED
DATE– AUG. 2022

DRAWING NO.
E-1
SHEET NO.
94 OF 109
PROJECT 001650.0428

File name: \\hrg.local\hrgdfsfiles\Project\0016\001650_0428\C3D\Plan Sets\ELEC\E0016500428-SI.dwg Layout:E1 Sep 01, 2022–2:59pm dcleland

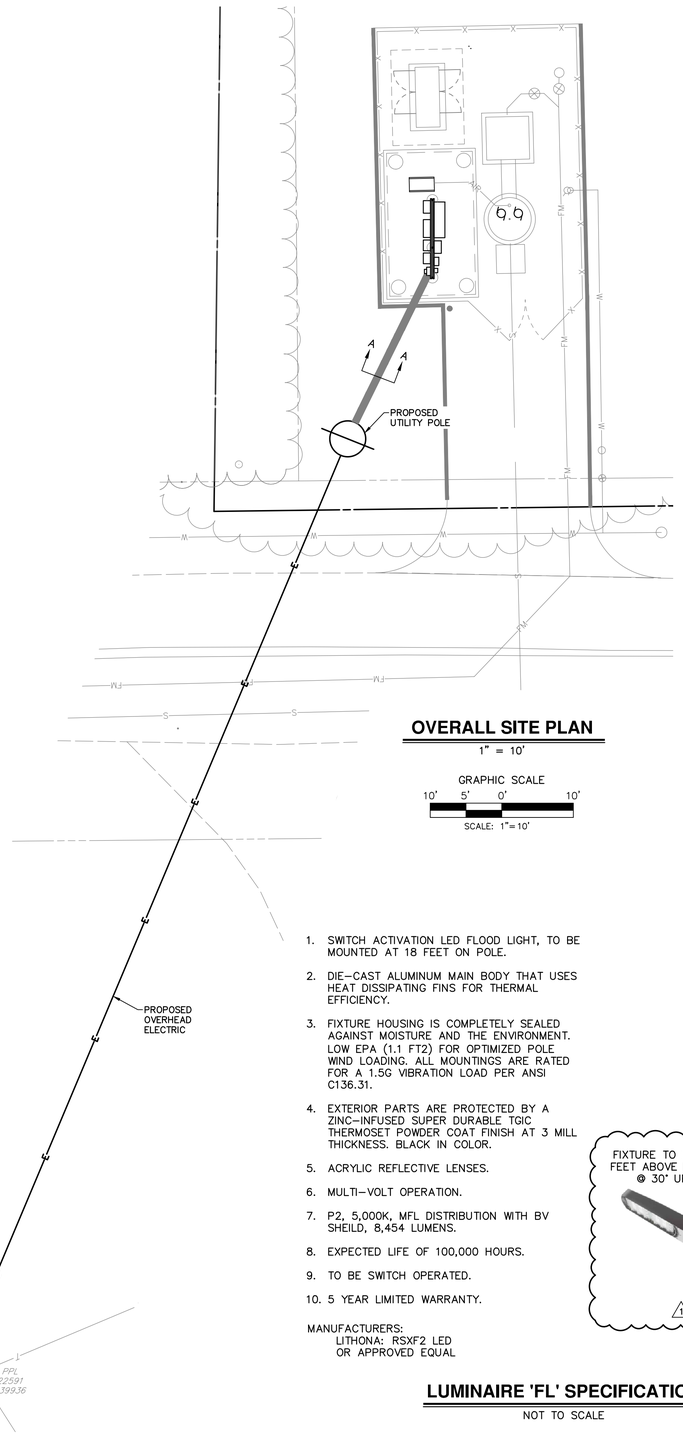

OVERALL SITE PLAN

1" = 10'

GRAPHIC SCALE

10' 5' 0' 10'

SCALE: 1"= 10'

1. SWITCH ACTIVATION LED FLOOD LIGHT, TO BE MOUNTED AT 18 FEET ON POLE.
2. DIE–CAST ALUMINUM MAIN BODY THAT USES HEAT DISSIPATING FINS FOR THERMAL EFFICIENCY.
3. FIXTURE HOUSING IS COMPLETELY SEALED AGAINST MOISTURE AND THE ENVIRONMENT. LOW EPA (1.1 FT2) FOR OPTIMIZED POLE WIND LOADING. ALL MOUNTINGS ARE RATED FOR A 1.5G VIBRATION LOAD PER ANSI C136.31.
4. EXTERIOR PARTS ARE PROTECTED BY A ZINC–INFUSED SUPER DURABLE TGIC THERMOSET POWDER COAT FINISH AT 3 MILL THICKNESS. BLACK IN COLOR.
5. ACRYLIC REFLECTIVE LENSES.
6. MULTI–VOLT OPERATION.
7. P2, 5,000K, MFL DISTRIBUTION WITH BV SHEILD, 8,454 LUMENS.
8. EXPECTED LIFE OF 100,000 HOURS.
9. TO BE SWITCH OPERATED.
10. 5 YEAR LIMITED WARRANTY.

MANUFACTURERS:
LITHONA: RSXF2 LED
OR APPROVED EQUAL

FIXTURE TO BE MOUNTED 21 FEET ABOVE FINISHED GRADE @ 30° UPWARD TILT

1 2

LUMINAIRE 'FL' SPECIFICATION

NOT TO SCALE

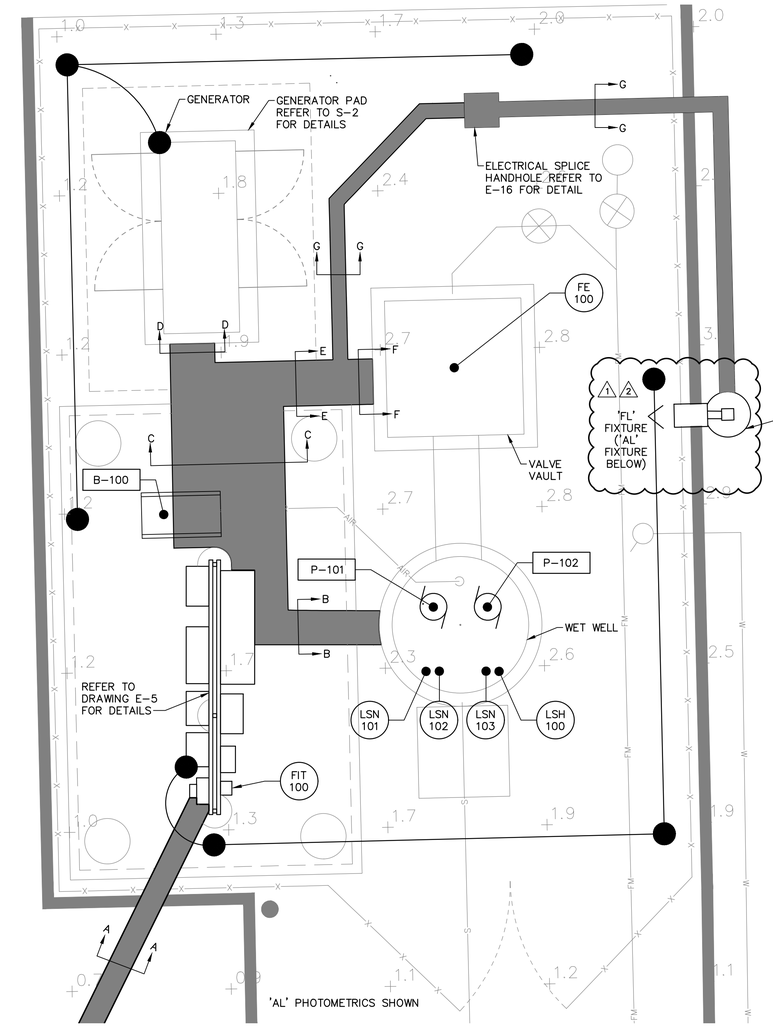

ENLARGED SITE PLAN

NOT TO SCALE

1. POLE MOUNTED LED AREA LIGHT.
2. SINGLE PIECE DIE–CAST ALUMINUM HOUSING WITH WITH INTERGRAL FULLY GASKETED ONE PIECE TUBLAR SILICONE.
3. ACRYLIC LENSES. TYPE 5 OPTICS WITH HOUSE SIDE SHIELDS.
4. CATALOG#: KAD LED 20C 1000 40K R5 MVOLT HS @ 6,219 LUMENS.
5. WITHSTANDING UP TO A 1.5 G VIBRATION LOAD RATING PER ANSI C136.31.
6. EXTERIOR PARTS ARE PROTECTED BY A ZINC–INFUSED SUPER DURABLE TGIC TERMOSET POWDER COAT FINISH AT 3 MILS THICKNESS IN DARK BRONZE.
7. 100,000 HOUR OPERATION.
8. MOTION SENSOR AND SWITCHED OPERATION.
9. FIVE YEAR WARRANTY.

MANUFACTURERS:
LITHONA KAD LED,
HUBBELL RATIO SERIES
OR APPROVED EQUAL

FIXTURE TO BE MOUNTED 17 FEET ABOVE FINISHED GRADE

1

LUMINAIRE 'AL' SPECIFICATION

NOT TO SCALE

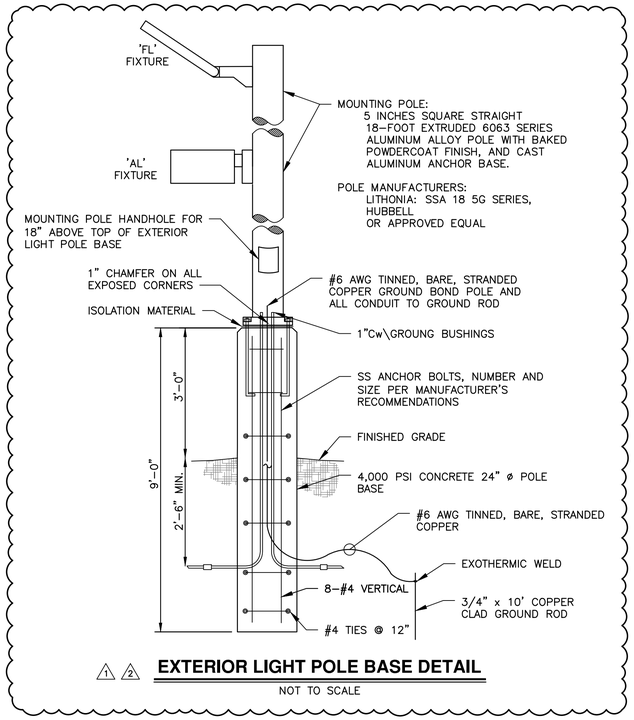

1 2 **EXTERIOR LIGHT POLE BASE DETAIL**

NOT TO SCALE

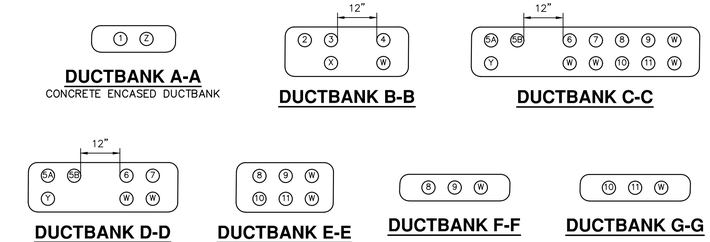

DUCTBANK SCHEDULE AND SECTIONS

NOT TO SCALE

Ductbank Conduit Schedule

Conduit Tag No.	From	To	Conduit/Wiring Legend No.	Conduit Size	Remarks
W			Spare	1	
X			Spare	2	
Y			Spare	3	
Z			Spare	4	
1	UTILITY POLE	METER BASE	UTILITY COND.	4	A-A
2	CRPCP	P-101	VFD CABLE	2	B-B
3	CRPCP	P-102	VFD CABLE	2	B-B
4	CRPCP	LSN-101/102/103, LSH-100	FLOAT CABLES	1	B-B
5A	GENERATOR	ATS-100	3-4/0, #3GND	3	C-C, D-D
5B	GENERATOR	ATS-100	3-4/0, #3GND	3	C-C, D-D
6	ATS-100	GEN-100	12 (6) #14	1	C-C, D-D
7	CRLP	GENERATOR	CRLP-2,4,6	1	C-C, D-D
8	CRPCP	FE-100	1 (1) #16 TSP	1	C-C, E-E, F-F
9	CRPCP	FE-100	MFR CABLE	1	C-C, E-E, F-F
10	CRLP	AREA LIGHT - AL	CRLP-1	1	C-C, E-E, G-G
11	CRLP	FLOOD LIGHT - FL	CRLP-11	1	C-C, E-E, G-G

NO.	REVISION	DATE	BY
2	ADDENDUM No. 2	09/30/22	DNC
1	ADDENDUM No. 1	09/21/22	DNC

COMMONWEALTH OF PENNSYLVANIA — MATTHEW DANIEL MOORE — ENGINEER — No. PE74555 — 9/30/22

HRG
Herbert, Rowland & Grubic, Inc.
Engineering & Related Services
AN EMPLOYEE-OWNED COMPANY
369 East Park Drive
Harrisburg, PA 17111
(717) 564-1121
Fax (717) 564-1158
hrg@hrg-inc.com
www.hrg-inc.com

HALIFAX AREA
WATER AND SEWER AUTHORITY
203 ARMSTRONG STREET
HALIFAX, PA 17032
(717) 896-8083

CREEK ROAD PUMP STATION
SITE PLANS, DETAILS, DUCTBANK SCHEDULE AND SECTIONS
FOR
HALIFAX TWP. SANITARY SEWER EXTENSION PROJECT
HALIFAX TOWNSHIP DAUPHIN COUNTY PENNSYLVANIA

PROJ. MGR. –	JJM
DESIGN–	NMH
CADD–	DNC
CHECKED–	MDM
SCALE–	AS NOTED
DATE–	AUG. 2022

DRAWING NO. **E-2**
SHEET NO. 95 OF 109
PROJECT 001650.0428

File name: \\hrg-box\Projfiles\Projects\001650\Design\E-2.dwg Layout:E2 Oct 04, 2022 - 3:32pm dsteed

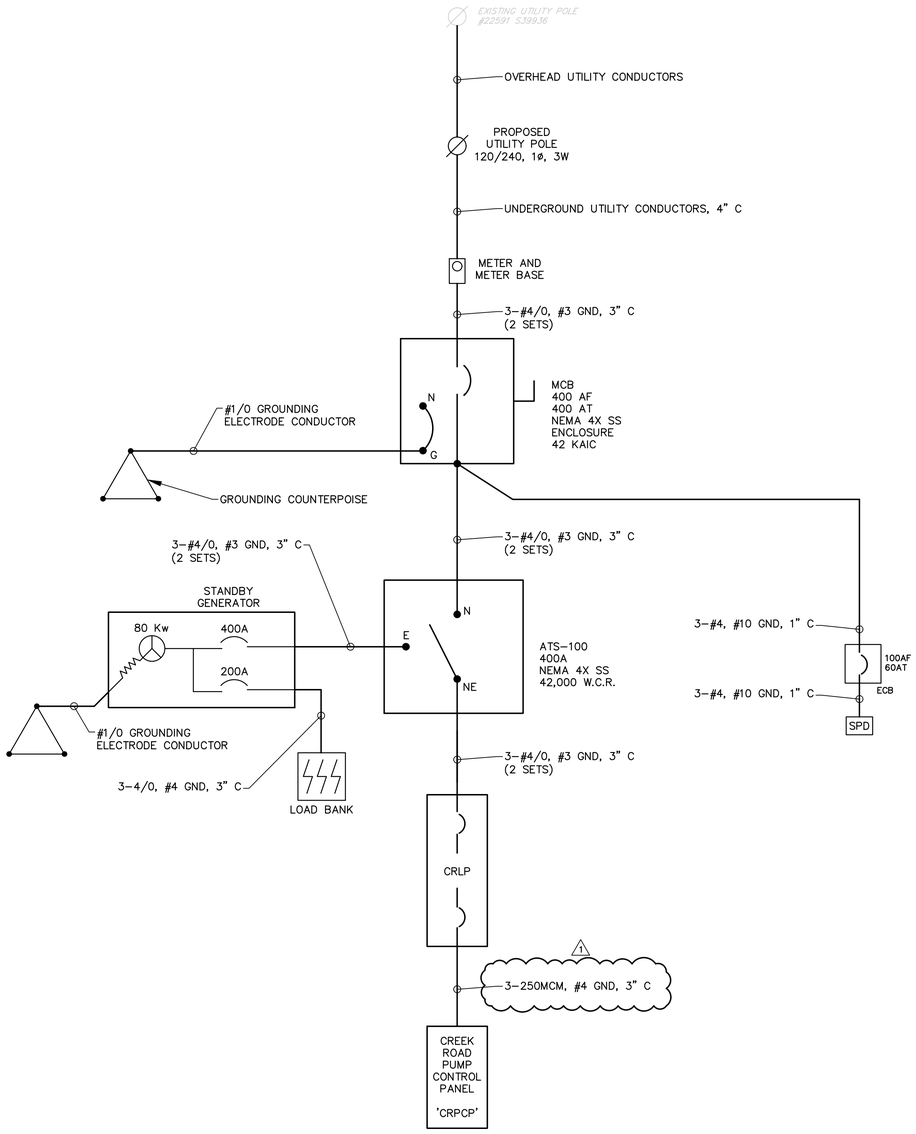

POWER ONE-LINE DIAGRAM

NOT TO SCALE

PANEL CRLP | BUS AMP 400A | MIN. A.I.C. 22,000 | MAIN BREAKER 400A
MOUNTING SURFACE | PHASE 1 | WIRE 3 | VOLTAGE 240/120
LOCATION KIOSK | NEMA TYPE 4X | SUBFEED BREAKER 250A

CKT	DESCRIPTION	BREAKER AMP	BREAKER POLES	LOAD (KW) A	LOAD (KW) B	WIRE NO	WIRE SIZE	GND. SIZE	COND SIZE	COND SIZE	GND. SIZE	WIRE SIZE	WIRE NO	LOAD (KW) A	LOAD (KW) B	BREAKER POLES	BREAKER AMP	DESCRIPTION	CKT
1	POLE LIGHT - AL	20	1	-		2	12	12	3/4	3/4	12	12	2	-		1	20	GEN STRIP HEATER	2
3	FIT-100	20	1		-	2	12	12	3/4	3/4	12	12	2		-	1	20	GEN PANEL HEATER	4
5	KIOSK LIGHTS	20	1	-		2	12	12	3/4	3/4	12	12	2	-		1	20	GEN BLOCK HEATER	6
7	KIOSK RECEPTACLES	20	1		-	2	12	12	3/4	3/4	12	12	3		-	2	20	CRBCP	8
9	AD-100	20	1	-		2	12	12	3/4					-					10
11	FLOOD LIGHT - FL	20	1		-	2	12	12	3/4						-	1	20	SPARE	12
13	SPARE	20	1	-										-		1	20	SPARE	14
15	SPARE	20	1		-										-	1	20	SPARE	16
17	SPARE	20	1	-										-		1	20	SPARE	18
19	SPARE	20	1		-										-	1	20	SPARE	20
21	SPARE	20	1	-										-		1	20	SPARE	22
23	SPARE	20	1		-										-	2	30	SPARE	24
25	SPARE	20	1	-										-					26
27	SPARE	20	1		-										-	2	30	SPARE	28
29	SPARE	20	1	-										-					30
31	SPARE	40	2		-										-	2	20	SPARE	32
33				-										-					34
35	SPARE	40	2		-										-	2	20	SPARE	36
37				-										-					38
39	SPARE	40	2		-					3/4	10	10	3		-	2	30	TVSS (80kA)	40
41				-										-					42
	SUB-TOTAL LOAD KW			0	0							SUB-TOTAL LOAD KW		0	0				
												TOTAL LOAD KW		0	0				

CRLP PANEL SCHEDULE 1

NOT TO SCALE

NO.	REVISION	DATE	BY
1	ADDENDUM No. 1	09/21/22	DNC

COMMONWEALTH OF PENNSYLVANIA
REGISTERED PROFESSIONAL ENGINEER
MATTHEW DANIEL MOORE
ENGINEER
No. PE74355
9/21/22

HRG
Herbert, Rowland & Grubic, Inc.
Engineering & Related Services
AN EMPLOYEE-OWNED COMPANY
369 East Park Drive
Harrisburg, PA 17111
(717) 564-1121
Fax (717) 564-1158
hrg@hrg-inc.com
www.hrg-inc.com

HALIFAX AREA
WATER AND SEWER AUTHORITY
203 ARMSTRONG STREET
HALIFAX, PA 17032
(717) 896-8083

CREEK ROAD PUMP STATION
POWER ONE-LINE DIAGRAM AND SCHEDULE
FOR
HALIFAX TWP. SANITARY SEWER EXTENSION PROJECT
HALIFAX TOWNSHIP DAUPHIN COUNTY PENNSYLVANIA

PROJ. MGR. – JJM
DESIGN– NMH
CADD– DNC
CHECKED–MDM
SCALE– AS NOTED
DATE– AUG. 2022

DRAWING NO.
E-3
SHEET NO.
96 OF 109
PROJECT 001650.0428

File name: \\Hrgbase\Vyoldfiles\Projects\001650\001650-0428\CAD\Plan Sets\LEC\001650428-PS.dwg Layout:E3 Sep 20, 2022 - 10:32am dlaskell

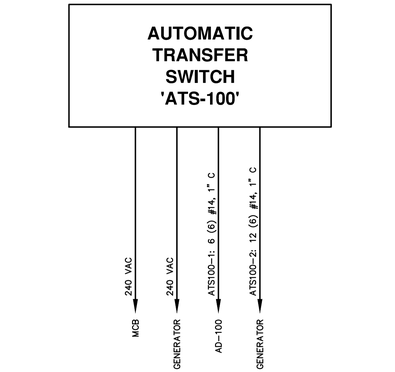

AUTOMATIC TRANSFER SWITCH 'ATS-100'

NOT TO SCALE

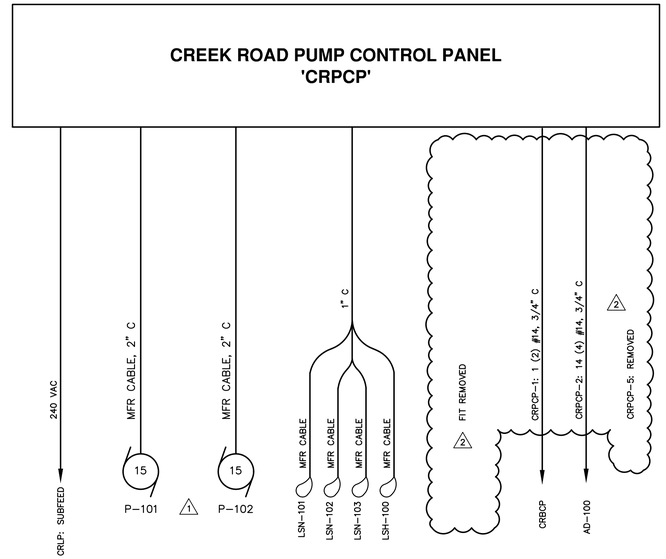

CREEK ROAD CONTROL PANEL 'CRCP'

NOT TO SCALE

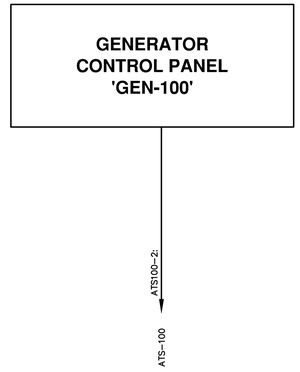

GENERATOR CONTROL PANEL 'GEN-100'

NOT TO SCALE

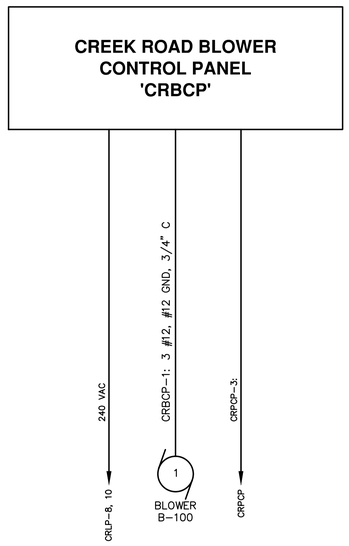

CREEK ROAD BLOWER CONTROL PANEL 'CRBCP'

NOT TO SCALE

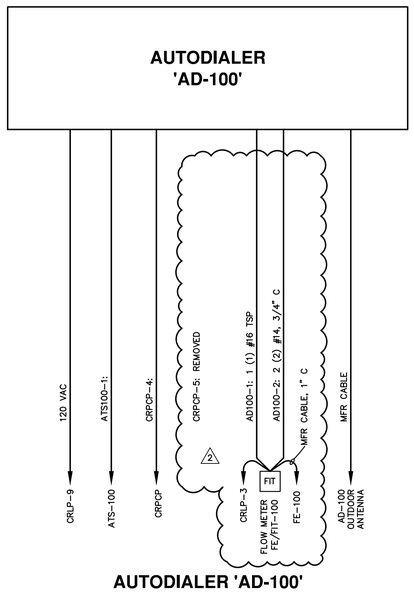

AUTODIALER 'AD-100'

NOT TO SCALE

NO.	REVISION	DATE	BY
2	ADDENDUM No. 3	10/11/2022	DNC
1	ADDENDUM No. 1	09/21/22	DNC

COMMONWEALTH OF PENNSYLVANIA
REGISTERED PROFESSIONAL
MATTHEW DANIEL MOORE
ENGINEER
No. PENNSYLVANIA
10/11/22

HRG
Herbert, Rowland & Grubic, Inc.
Engineering & Related Services
AN EMPLOYEE-OWNED COMPANY

369 East Park Drive
Harrisburg, PA 17111
(717) 564-1121
Fax (717) 564-1158
hrg@hrg-inc.com
www.hrg-inc.com

HALIFAX AREA
WATER AND SEWER AUTHORITY
203 ARMSTRONG STREET
HALIFAX, PA 17032
(717) 896-8083

CREEK ROAD PUMP STATION
CONTROL ONE-LINE DIAGRAMS
FOR
HALIFAX TWP. SANITARY SEWER EXTENSION PROJECT
HALIFAX TOWNSHIP **DAUPHIN COUNTY** **PENNSYLVANIA**

PROJ. MGR. –	JJM
DESIGN–	NMH
CADD–	DNC
CHECKED–	MDM
SCALE–	AS NOTED
DATE–	AUG. 2022

DRAWING NO.
E-4
SHEET NO.
97 OF **109**
PROJECT 001650.0428

File name: \\hrgland\Harrisburg\Project\001650\001650_2022\CSD\Plan Sets\LD\E4 Layout.E4 Oct 11, 2022–3:16pm dleland

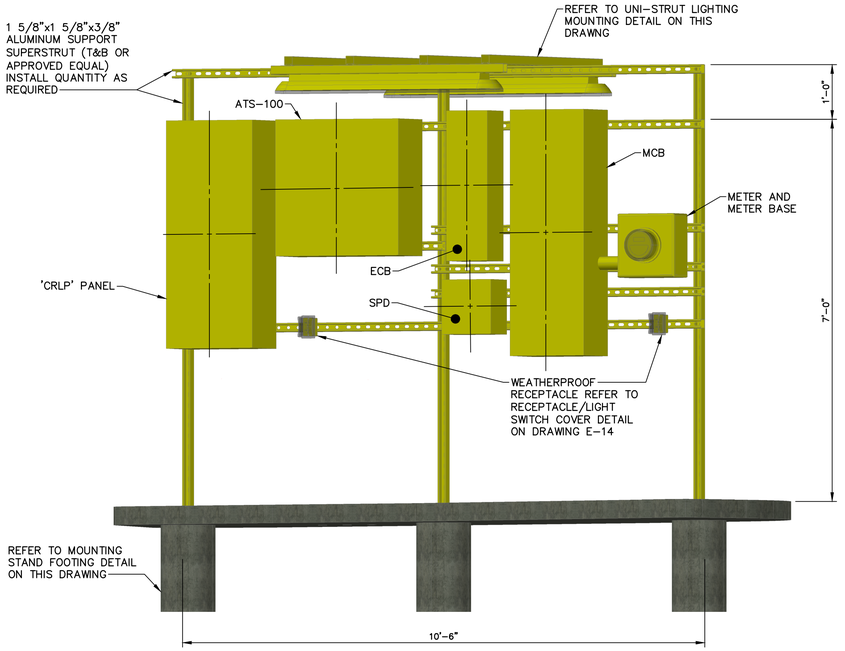

PARTIAL PANEL MOUNTING REAR VIEW DETAIL

NOT TO SCALE

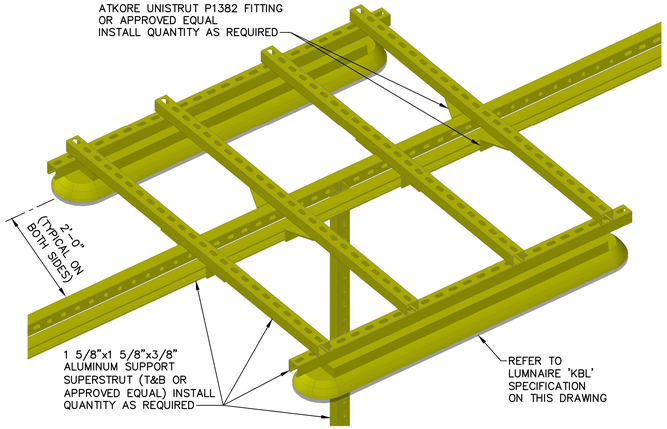

UNI-STRUT LIGHTING MOUNTING DETAIL

NOT TO SCALE

NOTES:

1. ELECTRICAL CONTRACTOR TO PROVIDE AND INSTALL KIOSK LIGHTING FIXTURES TO ADEQUATELY ILLUMINATE THE ELECTRICAL PANELS AND BLOWER PUMP SKID.
2. THE KIOSK CONCRETE PAD SHALL EXTEND A MINIMUM OF 3 FEET BEYOND THE DEEPEST PANEL.

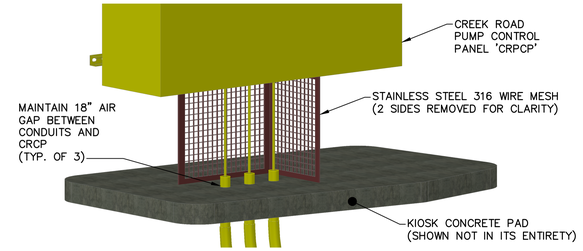

CONDUIT DETAIL

NOT TO SCALE

1. NONMETALLIC LED LUMINAIRE, NOMINALLY 4-FEET LONG.
2. PENDANT OR CEILING MOUNTED.
3. FIBERGLASS HOUSING WITH NEOPRENE GASKET.
4. ACRYLIC PRISMATIC LENS WITH SIX STAINLESS STEEL LATCHES.
5. SUITABLE FOR WET OR CORROSIVE LOCATIONS.
8. LED MINIMUM 6,000 LUMEN OUTPUT, 5000 KELVIN MINIMUM IP65 RATING
9. RATED FOR 60,000 HOURS OF LIFE.
10. MULTI-VOLT BALLAST.
11. MINIMUM FIVE YEAR WARRANTY

MANUFACTURERS:
LITHONIA: VAP LED SERIES
OR APPROVED EQUAL

LUMINAIRE 'KBL' SPECIFICATION

NOT TO SCALE

1. COMMERCIAL GRADE OCCUPANCY SENSOR
2. MOUNTING: WALL; FITS IN STANDARD WALL BOX
3. PASSIVE INFRARED ULTRASONIC MOTION SENSING
4. 180° SENSOR FIELD-OF-VIEW.
5. FEATURES: 1050 SQ. FT. COVERAGE MIN.
6. 120V, 1200WATT, UL LISTED INDOOR

MANUFACTURERS:
WATT STOPPER/LEGRAND DSW-301-W
OR APPROVED EQUAL

OCCUPANCY SENSOR 'OS' SPECIFICATION

NOT TO SCALE

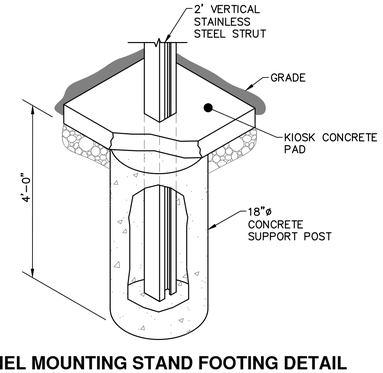

PANEL MOUNTING STAND FOOTING DETAIL

NOT TO SCALE

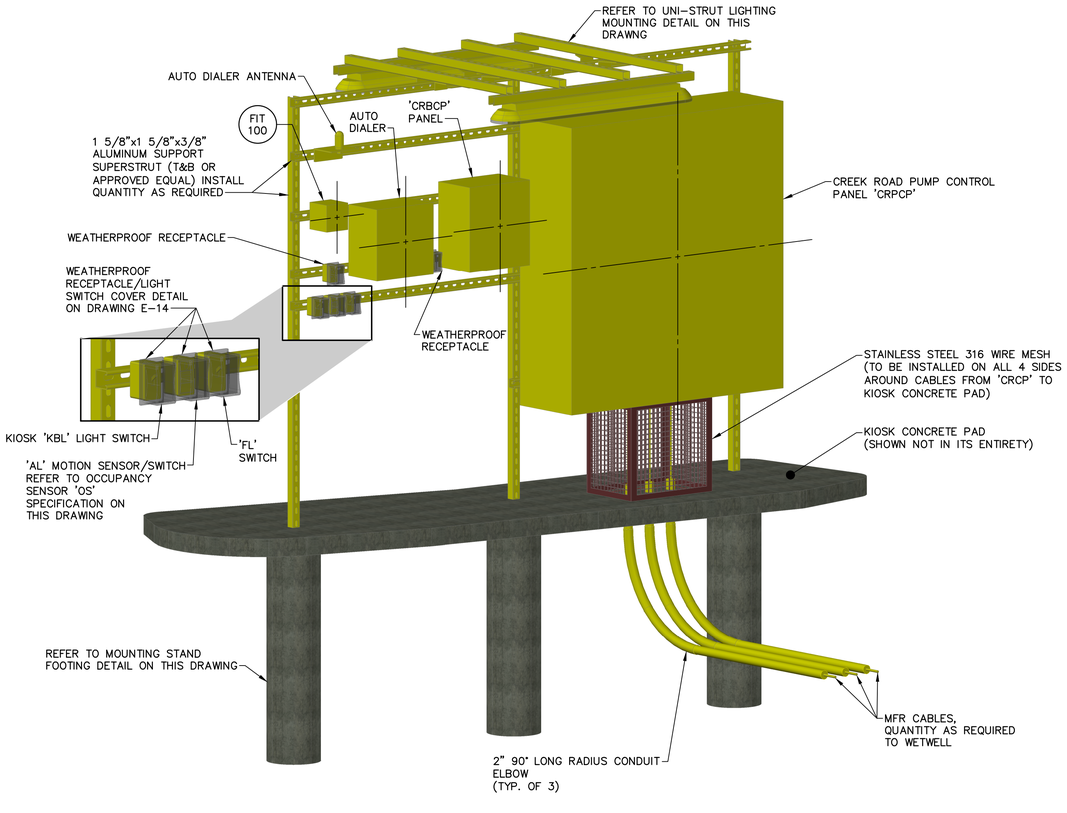

CONDUIT/PANEL MOUNTING FRONT VIEW DETAIL

NOT TO SCALE

NO.	REVISION	DATE	BY

COMMONWEALTH OF PENNSYLVANIA REGISTERED PROFESSIONAL MATTHEW DANIEL MOORE ENGINEER No. PE74355

HRG
Herbert, Rowland & Grubic, Inc.
Engineering & Related Services
AN EMPLOYEE-OWNED COMPANY
369 East Park Drive
Harrisburg, PA 17111
(717) 564-1121
Fax (717) 564-1158
hrg@hrg-inc.com
www.hrg-inc.com

HALIFAX AREA
WATER AND SEWER AUTHORITY
203 ARMSTRONG STREET
HALIFAX, PA 17032
(717) 896-8083

CREEK ROAD PUMP STATION
KIOSK PANEL MOUNTING STAND AND DETAILS
FOR
HALIFAX TWP. SANITARY SEWER EXTENSION PROJECT
HALIFAX TOWNSHIP DAUPHIN COUNTY PENNSYLVANIA

PROJ. MGR.	JJM
DESIGN	NMH
CADD	DNC
CHECKED	MDM
SCALE	AS NOTED
DATE	AUG. 2022

DRAWING NO. **E-5**
SHEET NO. **98** OF **109**
PROJECT 001650.0428

File name: \\hrgcivil\Virginia\Files\Projects\001\001650_0428\CAD\Plan Sets\LDD\001650428-notes.dwg Layout:E5 Sep 01, 2022 - 2:59pm dlafond

NOTE:

(1) MAINTAIN 2'-0" CLEARANCE BETWEEN DUCTBANK AND FORCE MAIN. ⚠1

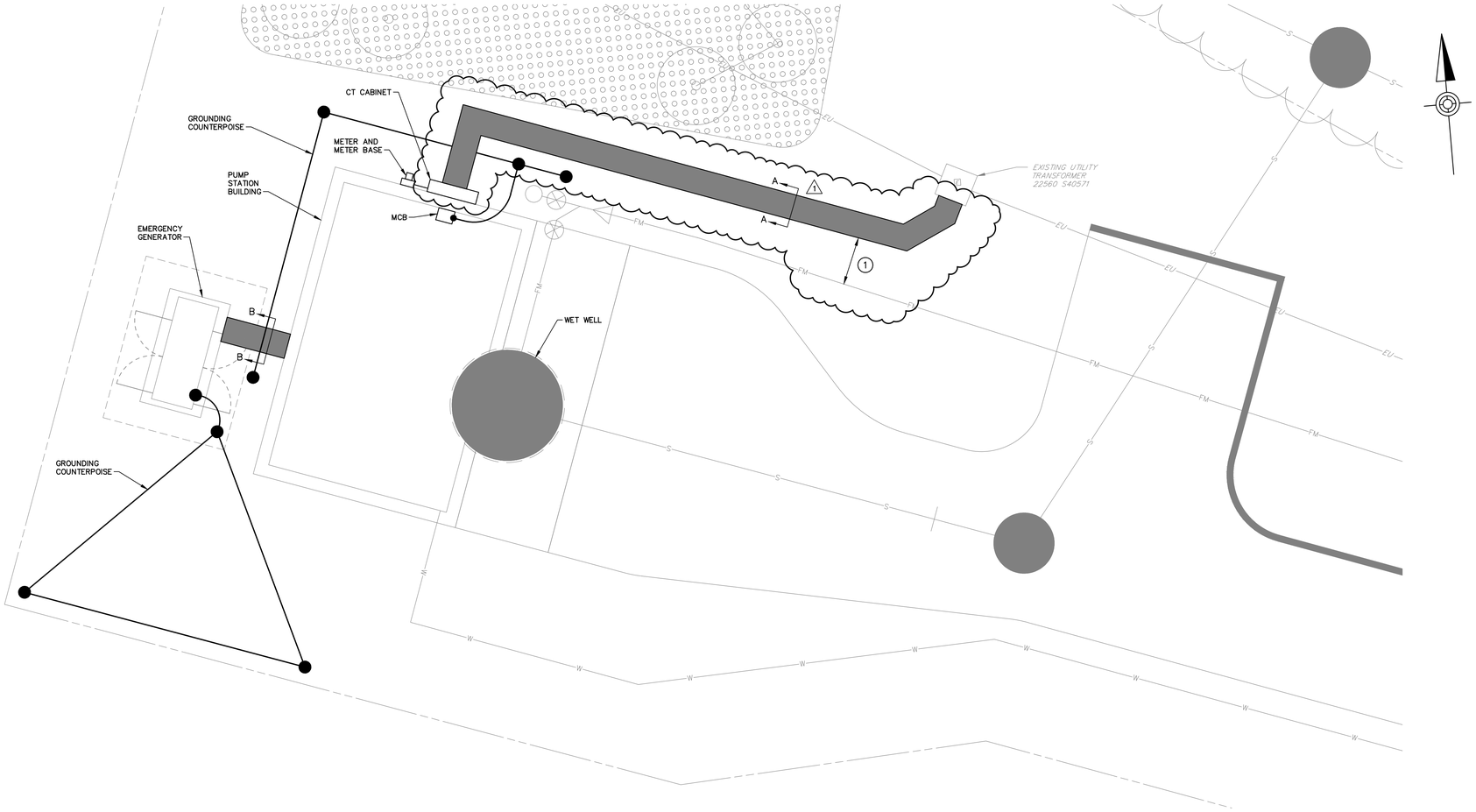

SITE PLAN

1" = 5'

Ductbank Conduit Schedule

Conduit Tag No.	From	To	Conduit/Wiring Legend No.	Conduit Size	Remarks
W			Spare	1	
X			Spare	2	
Y			Spare	3	
Z			Spare	4	
1	UTILITY TRANSFORMER	CT CABINET	UTILITY COND.	4	
2	UTILITY TRANSFORMER	CT CABINET	UTILITY COND.	4	
3	GENERATOR	ATS-200	3-350MCM, #1 GND	3	
4	GENERATOR	ATS-200	3-350MCM, #1 GND	3	
5	ATS-200	GEN-200	12 (6) #14	1	
6	ATS-200	GEN-200	CAT 6	1	
7	GEN-200	REMOTE ANNUNCIATOR	BELDEN 3105A	1	
8	LLP	GENERATOR	LLP-2,4,6	1	

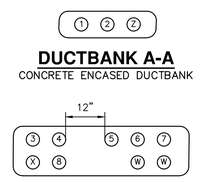

DUCTBANK A-A
CONCRETE ENCASED DUCTBANK

DUCTBANK B-B

DUCTBANK SCHEDULE AND SECTIONS

NOT TO SCALE

GRAPHIC SCALE
5' 2.5' 0' 5'
SCALE: 1"= 5'

NO.	REVISION	DATE	BY
1	ADDENDUM No. 1	09/21/22	DNC

COMMONWEALTH OF PENNSYLVANIA — Registered Professional — MATTHEW DANIEL MOORE — ENGINEER — No. PE74269 — 9/21/22

HRG
Herbert, Rowland & Grubic, Inc.
Engineering & Related Services
AN EMPLOYEE-OWNED COMPANY
369 East Park Drive
Harrisburg, PA 17111
(717) 564-1121
Fax (717) 564-1158
hrg@hrg-inc.com
www.hrg-inc.com

HALIFAX AREA WATER AND SEWER AUTHORITY
203 ARMSTRONG STREET
HALIFAX, PA 17032
(717) 896-8083

LENKER PUMP STATION
SITE PLAN, DUCTBANK SCHEDULE AND SECTIONS
FOR
HALIFAX TWP. SANITARY SEWER EXTENSION PROJECT
HALIFAX TOWNSHIP DAUPHIN COUNTY PENNSYLVANIA

PROJ. MGR. –	JJM
DESIGN–	NMH
CADD–	DNC
CHECKED–	MDM
SCALE–	AS NOTED
DATE–	AUG. 2022

DRAWING NO. **E-6**
SHEET NO. 99 OF 109
PROJECT 001650.0428

File name: \\hrg-harr\Projects\001650\002-SWR\CSD\Plan Sets\LDD\001650428-Sheet Layout.E6 Sep 21, 2022 - 1:05pm dlelland

NOTES:

1. WETWELL AREA IS CLASSIFIED AS A CLASS 1 DIVISION 1 LOCATION ACCORDING TO NFPA 820. ALL EQUIPMENT, MATERIALS AND INSTALLATION PRACTICES SHALL ABIDE BY ALL APPLICABLE CODES.
2. WEATHERPROOF RECEPTACLE. UTILIZE EXPLOSION PROOF LIGHT(S), EQUIPMENT AND TOOLS IN THE AREA OF THE WETWELL.
3. MAINTAIN MINIMUM 5'–0" DISTANCE FROM ACTIVATED CARBON VENT. TO BE LOCATED OUTSIDE OF HAZARDOUS LOCATION BOUNDARY.
4. REFER TO HVAC DRAWINGS FOR MOUNTING OF THE SPLIT–SYSTEM OUTDOOR UNIT.
5. REFER TO NETWORK VIDEO EQUIPMENT DIAGRAM ON DRAWING E–14.
6. DOOR SWITCH SHALL BE A 20A PLUNGER STYLE SWITCH.
   MARS AIR DOORS, MANUFACTURER # 99–014,
   AWOCO, MANUFACTURER # TZ–6001–20A
   OR APPROVED EQUAL.
7. CAMERAS SHALL BE INSTALLED 9'–0" ABOVE FINISHED FLOOR ELEVATION.

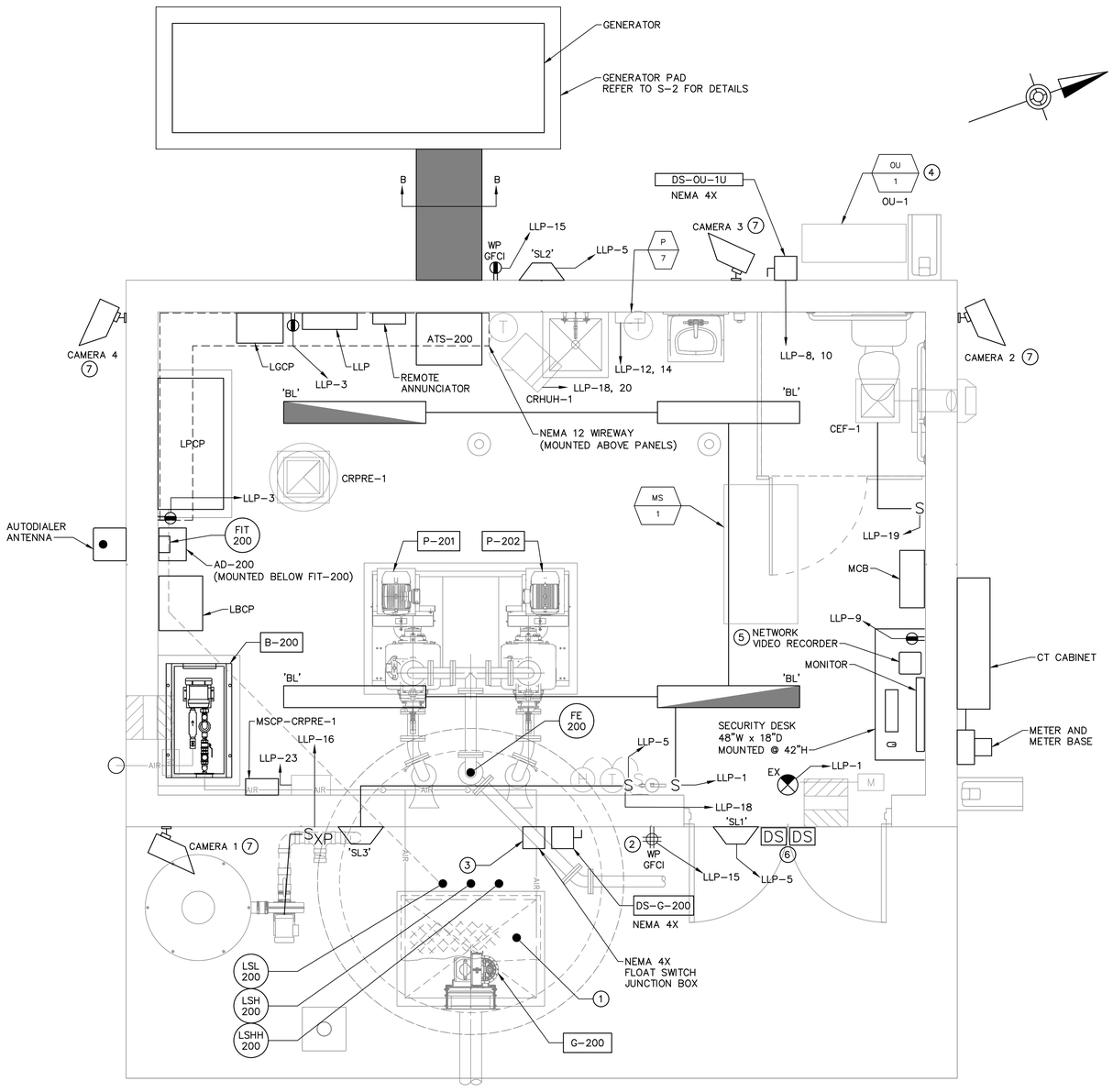

PROPOSED ELECTRICAL PLAN

1/2" = 1'–0"

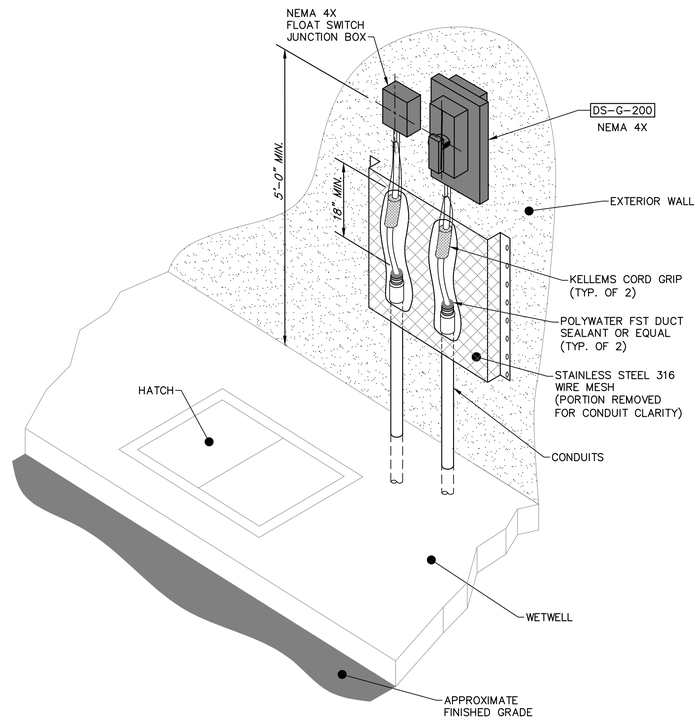

DISCONNECT DS-G-200 AND FLOAT SWITCH JUNCTION BOX DETAIL

NOT TO SCALE

1' 0' 1' 2'

SCALE: 1/2"=1'–0"

File name: \\hrgdata\Projects\Projects\001650\001650_2048\CSD\Plan Sets\LDO\001650428-PS.dwg Layout: E7 Sep 06, 2022–11:14am dsteland

NO.	REVISION	DATE	BY

COMMONWEALTH OF PENNSYLVANIA REGISTERED PROFESSIONAL ENGINEER MATTHEW DANIEL MOORE PE 079355 9/1/22

HRG
Herbert, Rowland & Grubic, Inc.
Engineering & Related Services
AN EMPLOYEE-OWNED COMPANY

369 East Park Drive
Harrisburg, PA 17111
(717) 564-1121
Fax (717) 564-1158
hrg@hrg-inc.com
www.hrg-inc.com

HALIFAX AREA
WATER AND SEWER AUTHORITY
203 ARMSTRONG STREET
HALIFAX, PA 17032
(717) 896-8083

LENKER PUMP STATION
PROPOSED ELECTRICAL PLAN AND DETAIL
FOR
HALIFAX TWP. SANITARY SEWER EXTENSION PROJECT
HALIFAX TOWNSHIP **DAUPHIN COUNTY** **PENNSYLVANIA**

PROJ. MGR. –	JJM
DESIGN–	NMH
CADD–	DNC
CHECKED–	MDM
SCALE–	AS NOTED
DATE–	AUG. 2022

DRAWING NO.
E-7
SHEET NO.
100 OF **109**
PROJECT 001650.0428

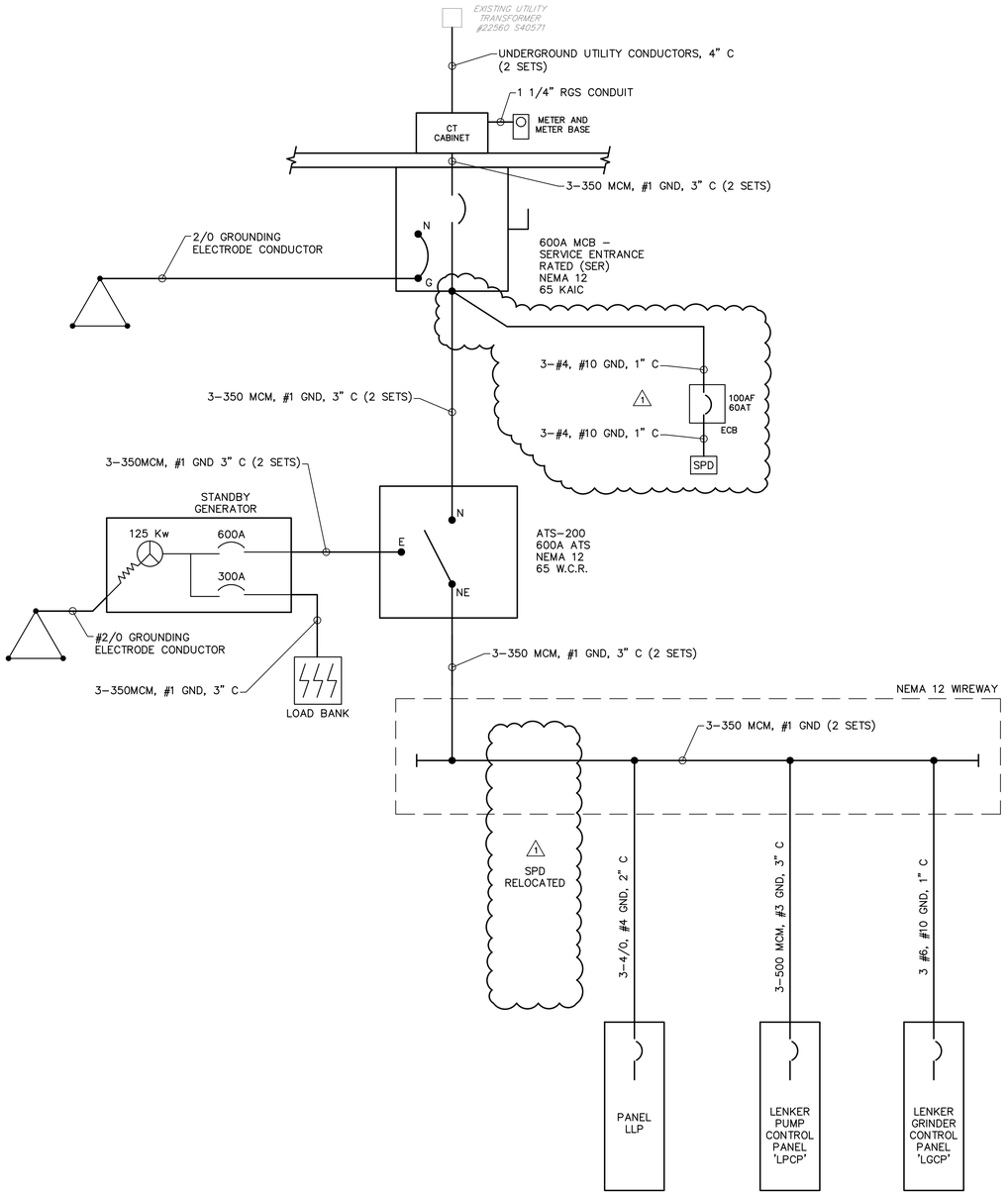

POWER ONE-LINE DIAGRAM

NOT TO SCALE

PANEL LLP | BUS AMP 225A | MIN. A.I.C. 65,000 | MAIN BREAKER 225A
MOUNTING SURFACE | PHASE 1 | WIRE 3 | VOLTAGE 240/120
LOCATION PUMP ROOM 200 | NEMA TYPE 12

CKT	DESCRIPTION	BREAKER AMP	BREAKER POLES	LOAD (KW) A	LOAD (KW) B	WIRE NO	WIRE SIZE	GND. SIZE	COND SIZE	COND SIZE	GND. SIZE	WIRE SIZE	WIRE NO	LOAD (KW) A	LOAD (KW) B	BREAKER POLES	BREAKER AMP	DESCRIPTION	CKT
1	PUMP ROOM LIGHTS	20	1	-		2	12	12	3/4	3/4	12	12	2	-		1	20	GEN BLOCK HEATER	2
3	PUMP ROOM RECEPTACLES	20	1		-	2	12	12	3/4	3/4	12	12	2		-	1	20	GEN STRIP HEATER	4
5	EXTERIOR LIGHTS	20	1	-		2	12	12	3/4	3/4	12	12	2	-		1	20	GEN PANEL HEATER	6
7	FIT-200	20	1		-	2		12	3/4	3/4	10	10	3		-	2	30	SPLIT SYSTEM AC (OU/MS-1)	8
9	CAMERA SYSTEM	20	1	-		2	12	12	3/4				3	-					10
11	LBCP	20	2		-	3	12	12	3/4	1	10	4	3		-	2	60	WATER HEATER (P-7)	12
13				-										-					14
15	EXTERIOR RECPT.	20	1		-	2	12	12	3/4	3/4	12	12	2		-	1	20	ODOR CONTROL SYSTEM	16
17	AD-200	20	1	-		2	12	12	3/4	1	10	4	3	-		2	60	HEATER (CRHUH-1)	18
19	EX. FAN (CEF-1)	20	1		-	2	12	12	3/4						-				20
21	MSCP-CRPRE-1	20	1	-		2	12	12	3/4					-		1	20	SPARE	22
23	DEHUMIDIFIER	20	1		-	2	12	12	3/4						-	2	30	SPARE	24
25	SPARE	20	1	-										-					26
27	SPARE	20	1		-										-	2	30	SPARE	28
29	SPARE	20	1	-										-					30
31	SPARE	20	1		-										-	2	60	SPARE	32
33	SPARE	20	1	-										-					34
35	SPARE	20	2		-										-	2	60	SPARE	36
37				-										-					38
39	SPARE	20	2		-					3/4	10	10	3		-	2	30	TVSS (80kA)	40
41				-										-					42
	SUB-TOTAL LOAD KW			0	0							SUB-TOTAL LOAD KW		0	0				
												TOTAL LOAD KW		0	0				

LLP PANEL SCHEDULE

NOT TO SCALE

NO.	REVISION	DATE	BY
1	ADDENDUM No. 2	09/30/22	DNC

COMMONWEALTH OF PENNSYLVANIA — Registered Professional — MATTHEW DANIEL MOORE — ENGINEER — No. PE74935 — 9/30/22

HRG
Herbert, Rowland & Grubic, Inc.
Engineering & Related Services
AN EMPLOYEE-OWNED COMPANY
369 East Park Drive
Harrisburg, PA 17111
(717) 564-1121
Fax (717) 564-1158
hrg@hrg-inc.com
www.hrg-inc.com

HALIFAX AREA
WATER AND SEWER AUTHORITY
203 ARMSTRONG STREET
HALIFAX, PA 17032
(717) 896-8083

LENKER PUMP STATION
POWER ONE-LINE DIAGRAM AND SCHEDULE
FOR
HALIFAX TWP. SANITARY SEWER EXTENSION PROJECT
HALIFAX TOWNSHIP DAUPHIN COUNTY PENNSYLVANIA

PROJ. MGR. – JJM
DESIGN– NMH
CADD– DNC
CHECKED– MDM
SCALE– AS NOTED
DATE– AUG. 2022

DRAWING NO. E-8
SHEET NO. 101 OF 109
PROJECT 001650.0428

File name: \\Pgharvey\Projects\2001\001650-0428\CAD\Plot Sets\LLP\E001650428-P2.dwg Layout:E8 Oct 05, 2022 - 3:10pm dsteed

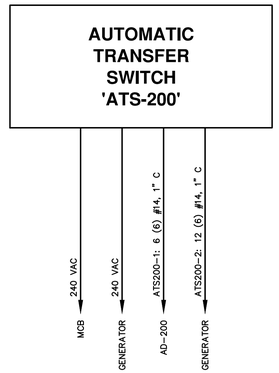

AUTOMATIC TRANSFER SWITCH 'ATS-200'

NOT TO SCALE

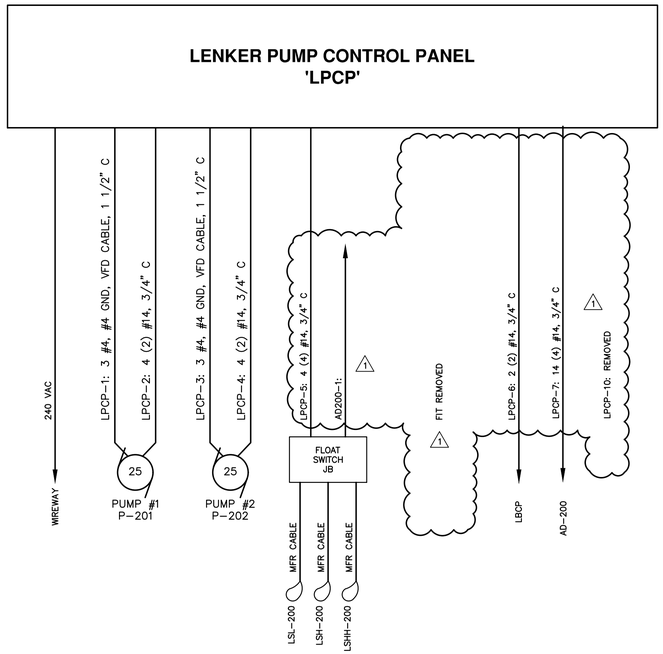

LENKER PUMP CONTROL PANEL 'LPCP'

NOT TO SCALE

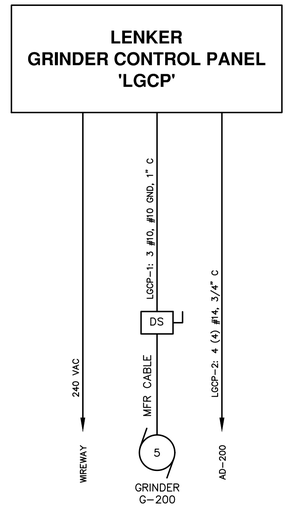

LENKER GRINDER CONTROL PANEL 'LGCP'

NOT TO SCALE

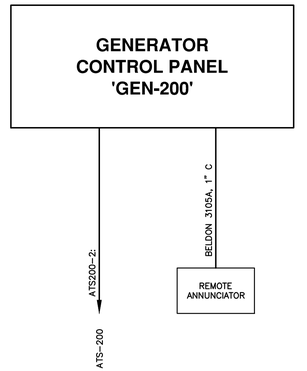

GENERATOR CONTROL PANEL 'GEN-200'

NOT TO SCALE

LENKER BLOWER CONTROL PANEL 'LBCP'

NOT TO SCALE

AUTODIALER 'AD-200'

NOT TO SCALE

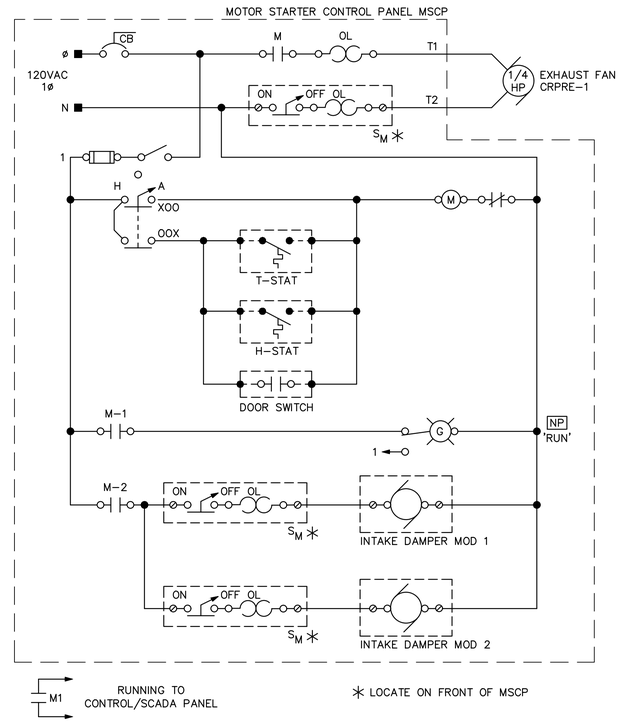

EXHAUST FAN MSCP ELEMENTARY RISER DIAGRAM

NOT TO SCALE

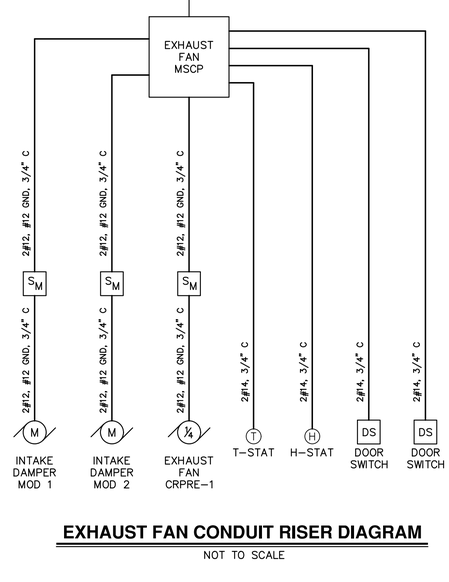

EXHAUST FAN CONDUIT RISER DIAGRAM

NOT TO SCALE

NO.	REVISION	DATE	BY
1	ADDENDUM No. 3	10/11/2022	DNC

COMMONWEALTH OF PENNSYLVANIA — MATTHEW DANIEL MOORE — ENGINEER — No. PE078915 — 10/11/22

HRG
Herbert, Rowland & Grubic, Inc.
Engineering & Related Services
AN EMPLOYEE-OWNED COMPANY
369 East Park Drive
Harrisburg, PA 17111
(717) 564-1121
Fax (717) 564-1158
hrg@hrg-inc.com
www.hrg-inc.com

HALIFAX AREA
WATER AND SEWER AUTHORITY
203 ARMSTRONG STREET
HALIFAX, PA 17032
(717) 896-8083

LENKER PUMP STATION
CONTROL ONE-LINE DIAGRAMS
FOR
HALIFAX TWP. SANITARY SEWER EXTENSION PROJECT
HALIFAX TOWNSHIP **DAUPHIN COUNTY** **PENNSYLVANIA**

PROJ. MGR. –	JJM
DESIGN–	NMH
CADD–	DNC
CHECKED–	MDM
SCALE–	AS NOTED
DATE–	AUG. 2022

DRAWING NO.
E-9
SHEET NO.
102 OF **109**
PROJECT 001650.0428

File name: \\hrg-bos\Projfiles\Project\2001\001650_2\Civil\CSD\Plots Sets\LEC\2001650428-PS.dwg Layout: E9 Oct 11, 2022 - 3:16pm dsteed

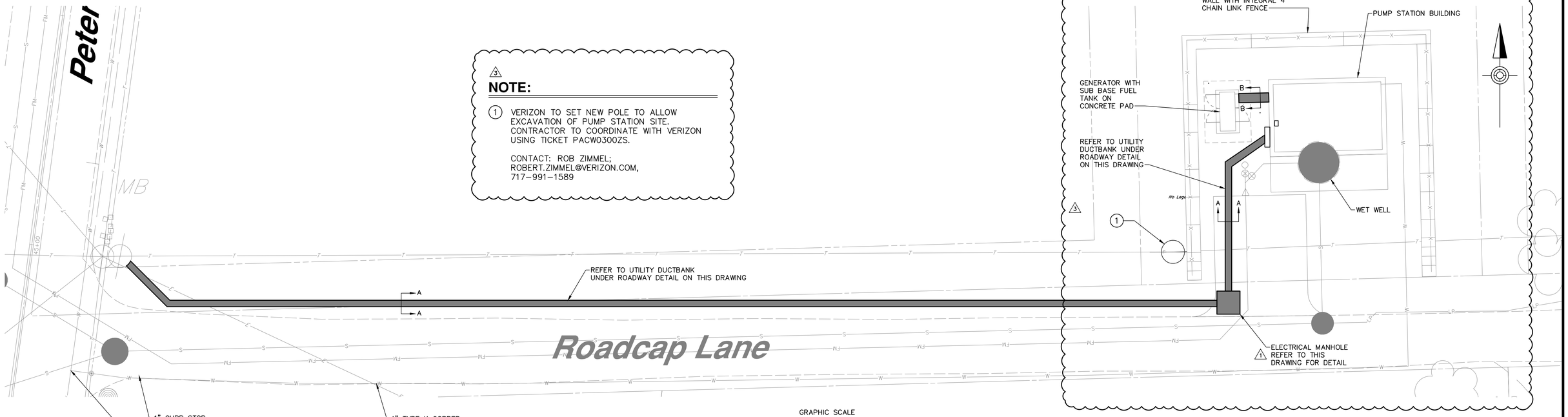

NOTE:

1. VERIZON TO SET NEW POLE TO ALLOW EXCAVATION OF PUMP STATION SITE. CONTRACTOR TO COORDINATE WITH VERIZON USING TICKET PACW0300ZS.

   CONTACT: ROB ZIMMEL;
   ROBERT.ZIMMEL@VERIZON.COM,
   717-991-1589

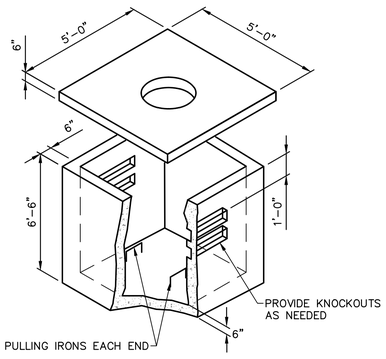

NOTES:

1. PROVIDE CONCRETE COVER FOR HS-20 LOADING. SEAL WATERTIGHT WITH MORTAR.
2. ALLOW FOR MIN. 18" BETWEEN FINISHED GRADE AND TOP OF COVER. PROVIDE MIN. 2 CONCRETE RING LEVELING COURSES.
3. PROVIDE FRAME AND COVER, NEENAH R-1640-C1 OR EQUAL FRAME AND COVER WITH DROP HANDLES, LETTERED "ELECTRIC".

TYPICAL ELECTRIC MANHOLE 1

NOT TO SCALE

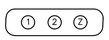

DUCTBANK A-A

CONCRETE ENCASED DUCTBANK

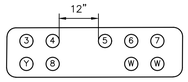

DUCTBANK B-B

Ductbank Conduit Schedule

Conduit Tag No.	From	To	Conduit/Wiring Legend No.	Conduit Size	Remarks
W			Spare	1	
X			Spare	2	
Y			Spare	3	
Z			Spare	4	
1	UTILITY POLE	CT CABINET	UTILITY COND.	4	
2	UTILITY POLE	CT CABINET	UTILITY COND.	4	
3	GENERATOR	ATS-300	3-350MCM, #1 GND	3	
4	GENERATOR	ATS-300	3-350MCM, #1 GND	3	
5	ATS-300	GEN-300	12 (6) #14	1	
6	ATS-300	GEN-300	CAT 6	1	
7	GEN-300	REMOTE ANNUNCIATOR	BELDEN 3105A	1	
8	RLLP	GENERATOR	RLLP-2,4,6	1	

DUCTBANK SCHEDULE AND SECTIONS

NOT TO SCALE

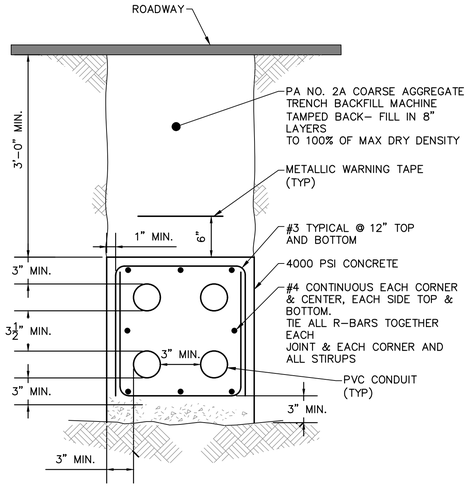

CONCRETE SHALL BE PER SPECIFICATION SECTION 03 30 00. ALL DUCTBANK SHALL BE CONCRETE ENCASED.

DUCTBANK NOTES:

1. SEE SPECIFICATIONS FOR ADDITIONAL DUCTBANK REQUIREMENTS.

UTILITY DUCTBANK UNDER ROADWAY DETAIL 2

NOT TO SCALE

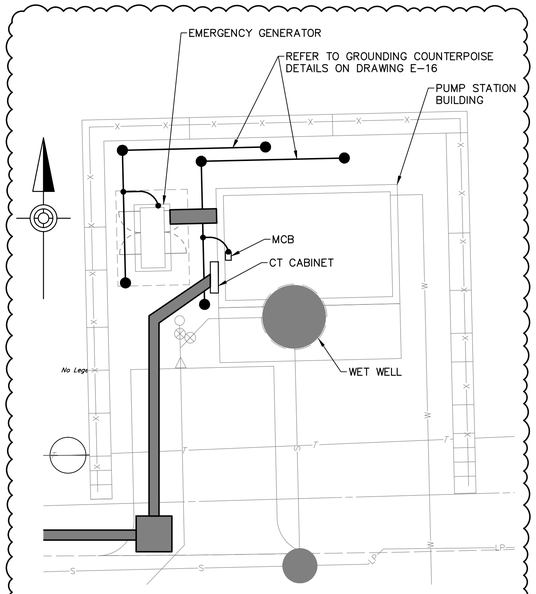

GROUNDING PLAN 3

NOT TO SCALE

NO.	REVISION	DATE	BY
3	PROPOSAL REQUEST No. 1	03/22/23	DNC
2	ADDENDUM No. 2	09/30/22	DNC
1	ADDENDUM No. 1	09/21/22	DNC

COMMONWEALTH OF PENNSYLVANIA — PROFESSIONAL ENGINEER — MATTHEW MICHAEL MOORE — 3/22/23

HRG
Herbert, Rowland & Grubic, Inc.
Engineering & Related Services
AN EMPLOYEE-OWNED COMPANY
369 East Park Drive
Harrisburg, PA 17111
(717) 564-1121
Fax (717) 564-1158
hrg@hrg-inc.com
www.hrg-inc.com

HALIFAX AREA WATER AND SEWER AUTHORITY
203 ARMSTRONG STREET
HALIFAX, PA 17032
(717) 896-8083

ROADCAP LANE PUMP STATION
PROPOSED SITE PLANS AND DETAILS
FOR
HALIFAX TWP. SANITARY SEWER EXTENSION PROJECT
HALIFAX TOWNSHIP DAUPHIN COUNTY PENNSYLVANIA

PROJ. MGR. –	JJM
DESIGN–	MDC
CADD–	BAB
CHECKED–	MDC
SCALE–	AS NOTED
DATE–	AUG. 2022

DRAWING NO. **E-10**
SHEET NO. 103 OF 109
PROJECT 001650.0428

File name: \\hrgbow\Projfiles\Project\001650\002-0428\CAD\Plan Set\LD\D001650428-S-RD CAP Proj Layout.ESD Mar 29, 2023 - 8:02am dsteed

NOTES:

1. WETWELL AREA IS CLASSIFIED AS A CLASS 1 DIVISION 1 LOCATION ACCORDING TO NFPA 820. ALL EQUIPMENT, MATERIALS AND INSTALLATION PRACTICES SHALL ABIDE BY ALL APPLICABLE CODES.
2. MINIMUM 5'-0" DISTANCE FROM ACTIVATED CARBON VENT.
3. WEATHERPROOF RECEPTACLE. UTILIZE EXPLOSION PROOF LIGHT(S), EQUIPMENT AND TOOLS IN THE AREA OF THE WETWELL.
4. REFER TO HVAC DRAWINGS FOR MOUNTING OF THE SPLIT-SYSTEM OUTDOOR UNIT.
5. REFER TO NETWORK VIDEO EQUIPMENT DIAGRAM ON DRAWING E-14.
6. DOOR SWITCH SHALL BE A 20A PLUNGER STYLE SWITCH. MARS AIR DOORS, MANUFACTURER # 99-014, AWOCO, MANUFACTURER # TZ-6001-20A OR APPROVED EQUAL.
7. CAMERAS SHALL BE INSTALLED 9'-0" ABOVE FINISHED FLOOR ELEVATION.

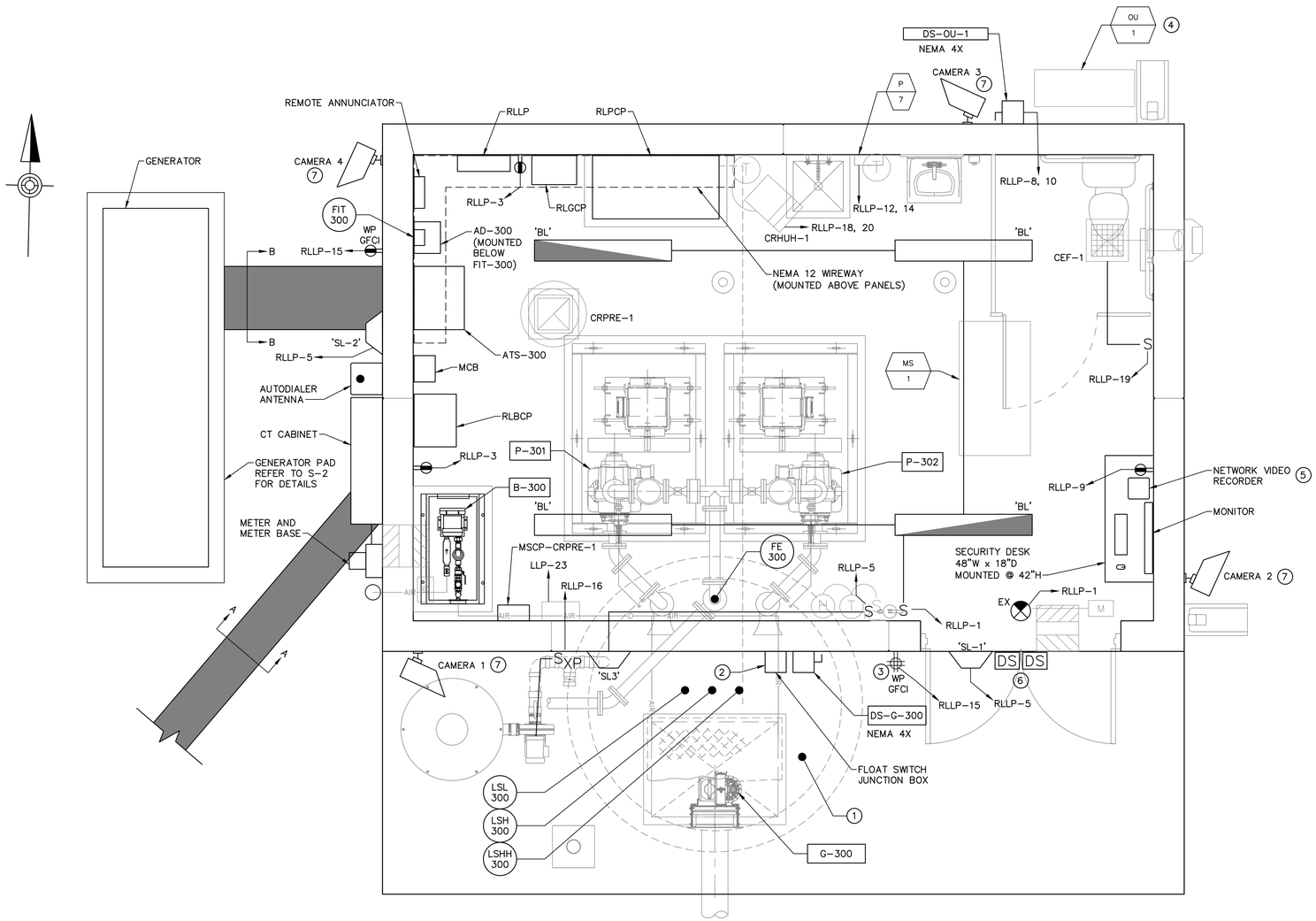

PROPOSED ELECTRICAL PLAN

1/2" = 1'-0"

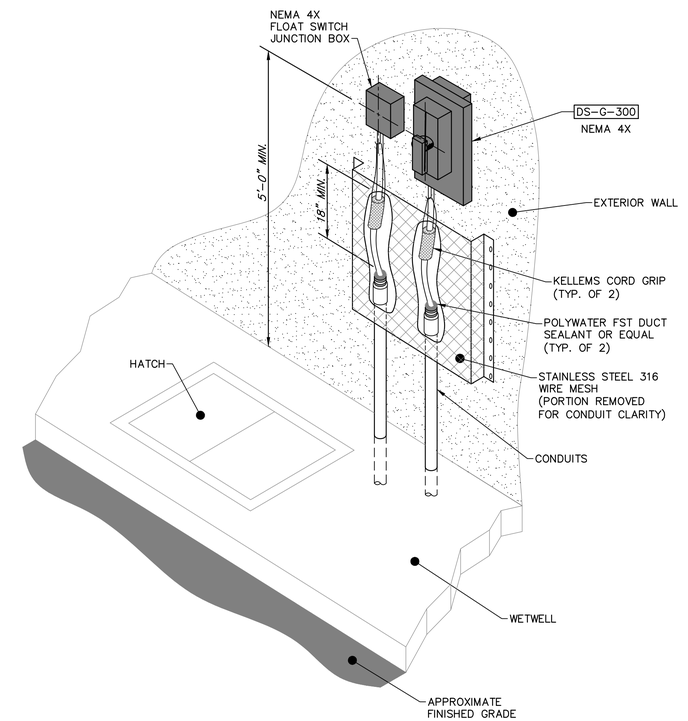

DISCONNECT DS-G-300 AND FLOAT SWITCH JUNCTION BOX DETAIL

NOT TO SCALE

1' 0' 1' 2'
SCALE: 1/2"=1'-0"

NO.	REVISION	DATE	BY

COMMONWEALTH OF PENNSYLVANIA REGISTERED PROFESSIONAL ENGINEER MATTHEW DANIEL MOORE No. PE074355 — 9/1/22

HRG
Herbert, Rowland & Grubic, Inc.
Engineering & Related Services
AN EMPLOYEE-OWNED COMPANY
369 East Park Drive
Harrisburg, PA 17111
(717) 564-1121
Fax (717) 564-1158
hrg@hrg-inc.com
www.hrg-inc.com

HALIFAX AREA WATER AND SEWER AUTHORITY
203 ARMSTRONG STREET
HALIFAX, PA 17032
(717) 896-8083

ROADCAP LANE PUMP STATION
PROPOSED ELECTRICAL PLAN AND DETAIL
FOR
HALIFAX TWP. SANITARY SEWER EXTENSION PROJECT
HALIFAX TOWNSHIP DAUPHIN COUNTY PENNSYLVANIA

PROJ. MGR. –	JJM
DESIGN–	NMH
CADD–	DNC
CHECKED–	MDM
SCALE–	AS NOTED
DATE–	AUG. 2022

DRAWING NO. **E-11**
SHEET NO. **104** OF **109**
PROJECT 001650.0428

File name: \\hrgbos\Projects\Projects\001650\001650-0428\CSD\Plan Sets\LD\001650428-PS.dwg Layout: LD1 Sep 06, 2022 - 11:43am dolland

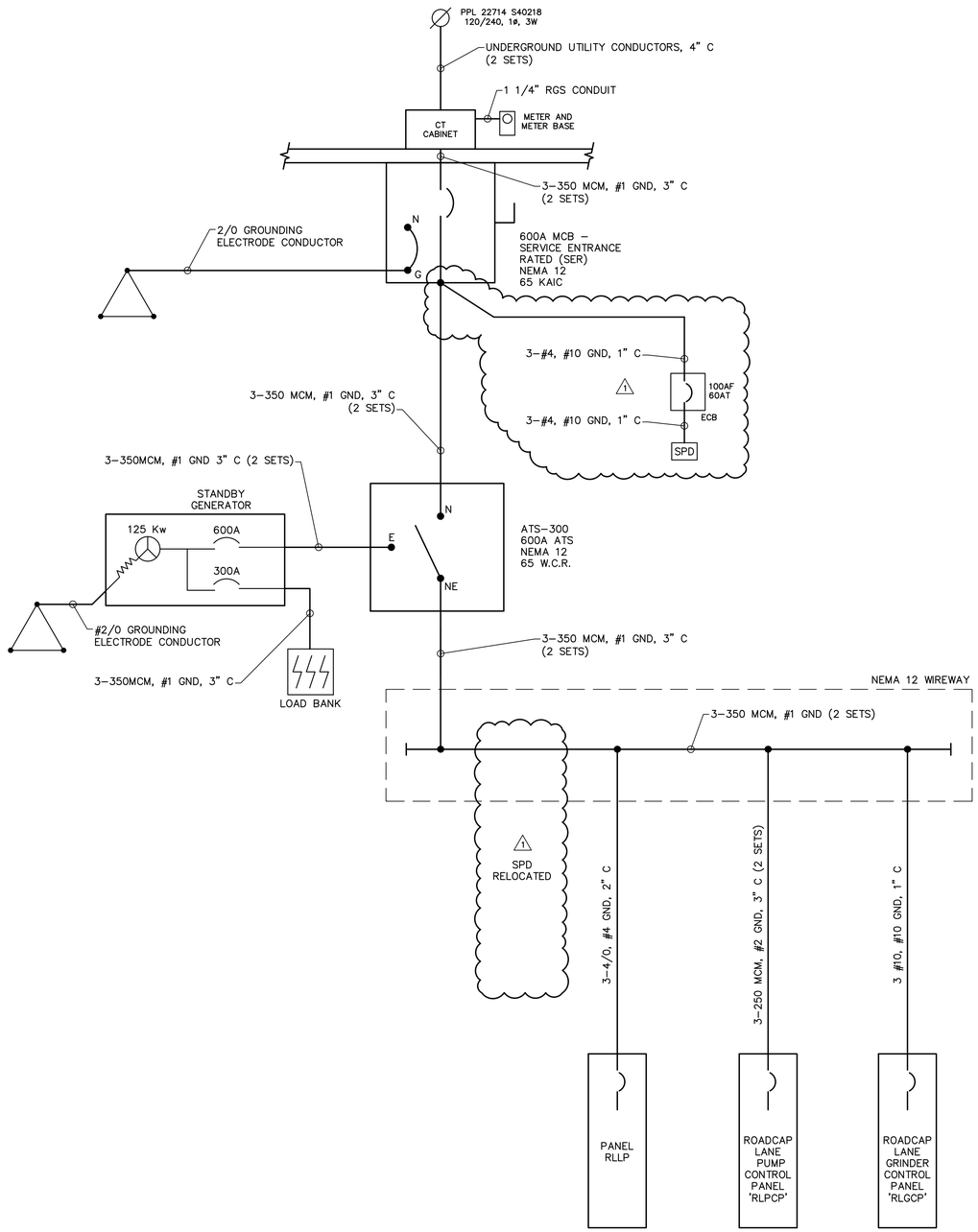

POWER ONE-LINE DIAGRAM

NOT TO SCALE

PANEL RLLP — BUS AMP 225A — MIN. A.I.C. 65,000 — MAIN BREAKER 225A
MOUNTING SURFACE — PHASE 1 — WIRE 3 — VOLTAGE 240/120
LOCATION PUMP ROOM 300 — NEMA TYPE 12

CKT	DESCRIPTION	BREAKER AMP	BREAKER POLES	LOAD (KW) A	LOAD (KW) B	WIRE NO	WIRE SIZE	GND. SIZE	COND SIZE	COND SIZE	GND. SIZE	WIRE SIZE	WIRE NO	LOAD (KW) A	LOAD (KW) B	BREAKER POLES	BREAKER AMP	DESCRIPTION	CKT
1	PUMP ROOM LIGHTS	20	1	-		2	12	12	3/4	3/4	12	12	2	-		1	20	GEN BLOCK HEATER	2
3	PUMP ROOM RECEPTACLES	20	1		-	2	12	12	3/4	3/4	12	12	2		-	1	20	GEN STRIP HEATER	4
5	EXTERIOR LIGHTS	20	1	-		2	12	12	3/4	3/4	12	12	2	-		1	20	GEN PANEL HEATER	6
7	FIT-300	20	1		-	2		12	3/4	3/4	10	10	3		-	2	30	SPLIT SYSTEM AC (OU/MS-1)	8
9	SECURITY SYSTEM	20	1	-		2	12	12	3/4				3	-					10
11	RLBCP	20	2		-	3	12	12	3/4	1	10	4	3		-	2	60	WATER HEATER (P-7)	12
13				-										-					14
15	EXTERIOR RECPT.	20	1		-	2	12	12	3/4	3/4	12	12	2		-	1	20	ODOR CONTROL SYSTEM	16
17	AD-300	20	1	-		2	12	12	3/4	1	10	4	3	-		2	60	HEATER (CRHUH-1)	18
19	EX. FAN (CEF-1)	20	1		-	2	12	12	3/4						-				20
21	MSCP-CRPRE-1	20	1	-		2	12	12	3/4					-		1	20	SPARE	22
23	DEHUMIDIFIER	20	1		-	2	12	12	3/4						-	2	30	SPARE	24
25	SPARE	20	1	-										-					26
27	SPARE	20	1		-										-	2	30	SPARE	28
29	SPARE	20	1	-										-					30
31	SPARE	20	1		-										-	2	60	SPARE	32
33	SPARE	20	1	-											-				34
35	SPARE	20	2		-										-	2	60	SPARE	36
37				-										-					38
39	SPARE	20	2		-					3/4	10	10	3		-	2	30	TVSS (80kA)	40
41				-										-					42
	SUB-TOTAL LOAD KW			0	0							SUB-TOTAL LOAD KW		0	0				
												TOTAL LOAD KW		0	0				

RLLP PANEL SCHEDULE

NOT TO SCALE

NO.	REVISION	DATE	BY
1	ADDENDUM No. 2	09/30/22	DNC

COMMONWEALTH OF PENNSYLVANIA — REGISTERED PROFESSIONAL — MATTHEW DANIEL MOORE — ENGINEER — No. PE74555 — 9/30/22

HRG
Herbert, Rowland & Grubic, Inc.
Engineering & Related Services
AN EMPLOYEE-OWNED COMPANY
369 East Park Drive
Harrisburg, PA 17111
(717) 564-1121
Fax (717) 564-1158
hrg@hrg-inc.com
www.hrg-inc.com

HALIFAX AREA
WATER AND SEWER AUTHORITY
203 ARMSTRONG STREET
HALIFAX, PA 17032
(717) 896-8083

ROADCAP LANE PUMP STATION
POWER ONE-LINE DIAGRAM AND SCHEDULE
FOR
HALIFAX TWP. SANITARY SEWER EXTENSION PROJECT
HALIFAX TOWNSHIP — DAUPHIN COUNTY — PENNSYLVANIA

PROJ. MGR. – JJM
DESIGN– NMH
CADD– DNC
CHECKED–MDM
SCALE– AS NOTED
DATE– AUG. 2022

DRAWING NO. E-12
SHEET NO. 105 OF 109
PROJECT 001650.0428

File name: \\hrgbison\Vyg\Halifax\Project\001650\002_RAP\001650_RAP(1)(2).dwg Layout:E12 Oct 05, 2022 - 3:09pm dsteed

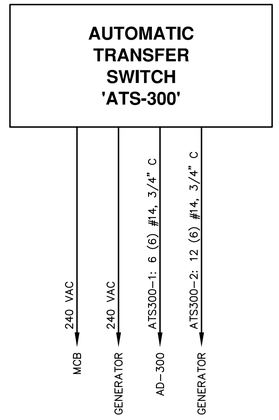

AUTOMATIC TRANSFER SWITCH 'ATS-300'

NOT TO SCALE

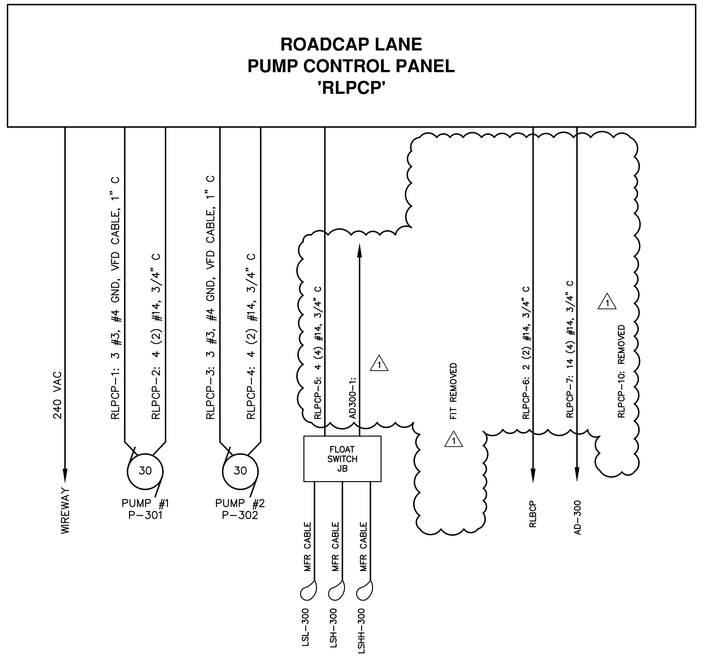

ROADCAP LANE PUMP CONTROL PANEL 'RLPCP'

NOT TO SCALE

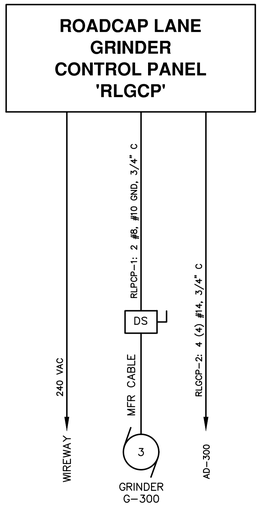

ROADCAP LANE GRINDER CONTROL PANEL 'RLGCP'

NOT TO SCALE

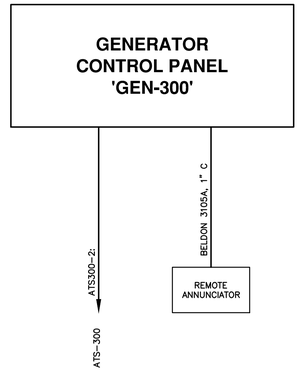

GENERATOR CONTROL PANEL 'GEN-300'

NOT TO SCALE

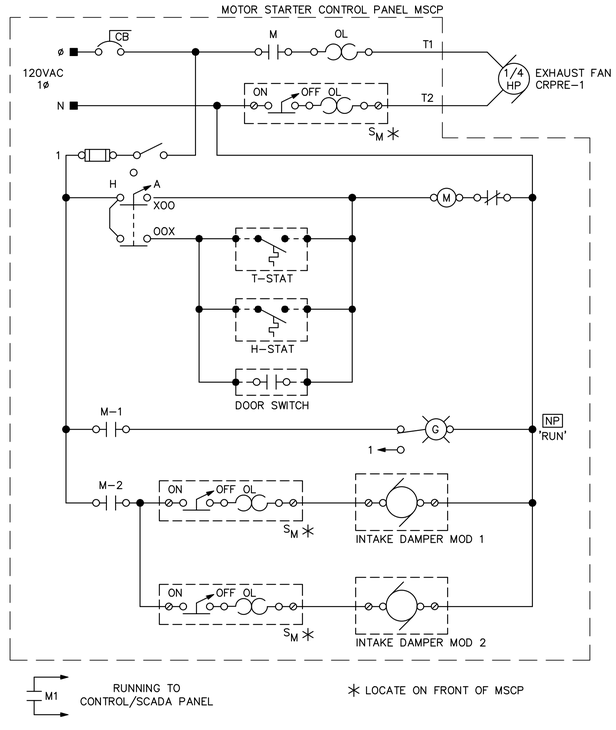

EXHAUST FAN MSCP ELEMENTARY RISER DIAGRAM

NOT TO SCALE

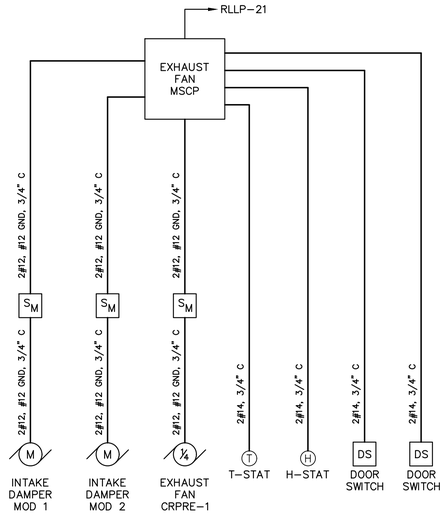

EXHAUST FAN CONDUIT RISER DIAGRAM

NOT TO SCALE

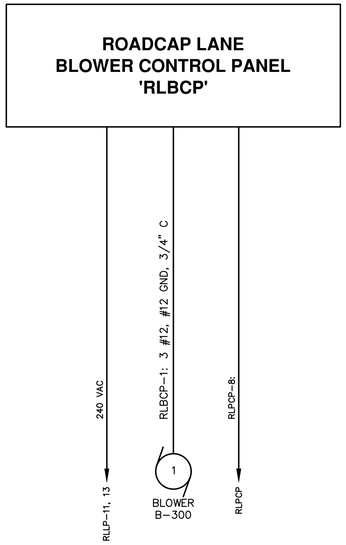

ROADCAP LANE BLOWER CONTROL PANEL 'RLBCP'

NOT TO SCALE

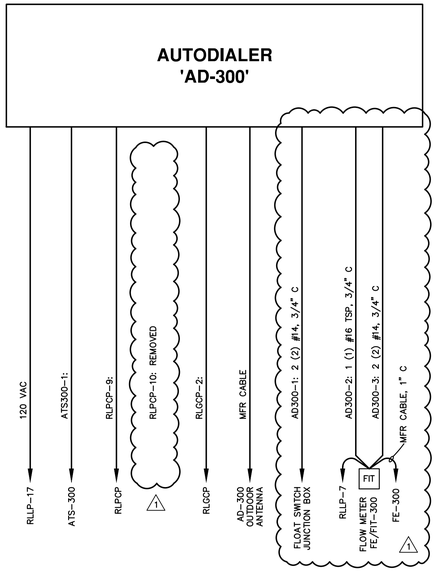

AUTODIALER 'AD-300'

NOT TO SCALE

NO.	REVISION	DATE	BY
1	ADDENDUM No. 3	10/11/2022	DNC

COMMONWEALTH OF PENNSYLVANIA — MATTHEW DANIEL MOORE — ENGINEER — No. PE074810 — 10/11/22

HRG
Herbert, Rowland & Grubic, Inc.
Engineering & Related Services
AN EMPLOYEE-OWNED COMPANY
369 East Park Drive
Harrisburg, PA 17111
(717) 564-1121
Fax (717) 564-1158
hrg@hrg-inc.com
www.hrg-inc.com

HALIFAX AREA
WATER AND SEWER AUTHORITY
203 ARMSTRONG STREET
HALIFAX, PA 17032
(717) 896-8083

ROADCAP LANE PUMP STATION
CONTROL ONE-LINE DIAGRAMS
FOR
HALIFAX TWP. SANITARY SEWER EXTENSION PROJECT
HALIFAX TOWNSHIP DAUPHIN COUNTY PENNSYLVANIA

PROJ. MGR. –	JJM
DESIGN–	NMH
CADD–	DNC
CHECKED–	MDM
SCALE–	AS NOTED
DATE–	AUG. 2022

DRAWING NO. **E-13**
SHEET NO. **106** OF **109**
PROJECT 001650.0428

File name: \\Hrgbase\Vyve\Halifax\Projects\001650\001650-2428\CAD\Plan Sets\AUG\E001650428-P2.dwg Layout:E13 Oct 11, 2022 - 3:18pm dlafond

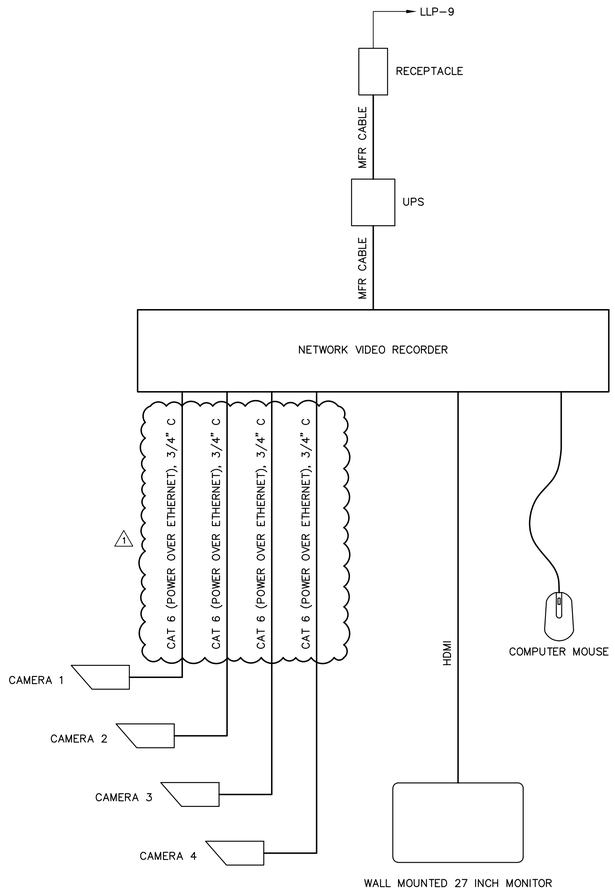

TYPICAL FOR:

STATION	BRANCH CIRCUIT
ROADCAP LANE	RLLP-9

CLOSED CIRCUIT VIDEO EQUIPMENT DIAGRAM

NOT TO SCALE

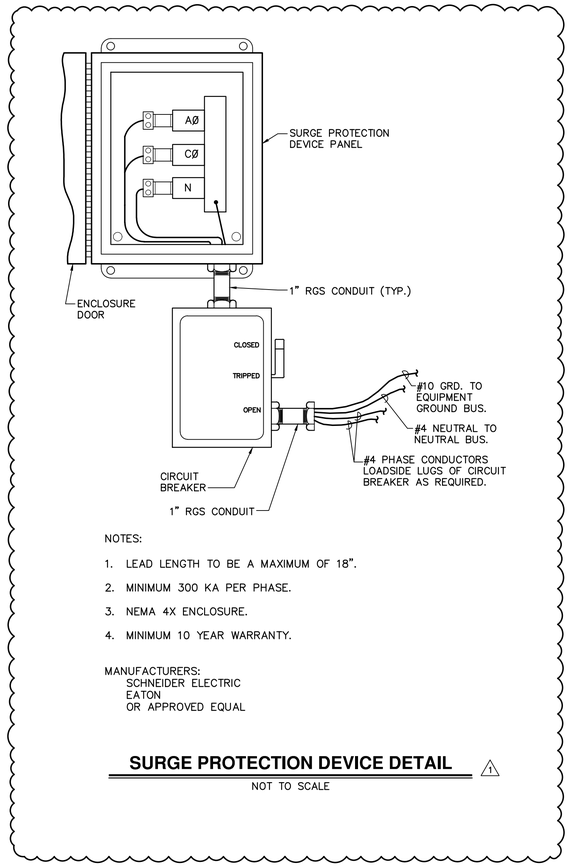

NOTES:

1. LEAD LENGTH TO BE A MAXIMUM OF 18".
2. MINIMUM 300 KA PER PHASE.
3. NEMA 4X ENCLOSURE.
4. MINIMUM 10 YEAR WARRANTY.

MANUFACTURERS:
SCHNEIDER ELECTRIC
EATON
OR APPROVED EQUAL

SURGE PROTECTION DEVICE DETAIL ⚠1

NOT TO SCALE

NO.	REVISION	DATE	BY
1	ADDENDUM No. 2	09/30/22	DNC

COMMONWEALTH OF PENNSYLVANIA REGISTERED PROFESSIONAL MATTHEW GABRIEL MOORE ENGINEER No. PE74935 PENNSYLVANIA 9/30/22

HRG
Herbert, Rowland & Grubic, Inc.
Engineering & Related Services
AN EMPLOYEE-OWNED COMPANY
369 East Park Drive
Harrisburg, PA 17111
(717) 564-1121
Fax (717) 564-1158
hrg@hrg-inc.com
www.hrg-inc.com

HALIFAX AREA
WATER AND SEWER AUTHORITY
203 ARMSTRONG STREET
HALIFAX, PA 17032
(717) 896-8083

STANDARD CONTROL PANELS/DIAGRAMS

FOR

HALIFAX TWP. SANITARY SEWER EXTENSION PROJECT

HALIFAX TOWNSHIP DAUPHIN COUNTY PENNSYLVANIA

PROJ. MGR. –	JJM
DESIGN–	NMH
CADD–	DNC
CHECKED–	MDM
SCALE–	AS NOTED
DATE–	AUG. 2022

DRAWING NO. E-14
SHEET NO. 107 OF 109
PROJECT 001650.0428

File name: \\hrgvan\Vaprofiles\Project\001\001650_0428\CSD\Plan Sets\LDD\001650428-PS.dwg Layout: E14 Oct 05, 2022 - 3:11pm dsteed

1. WEATHERPROOF WHILE IN USE SINGLE 1–GANG EXTRA DUTY FOR IN–USE PROTECTION.
2. DURABLE CLEAR POLYCARBONATE MATERIAL.
3. UL, NEMA 3R RATING.
4. LOCKABLE TAB.
5. ATTACHED GASKET MOUNTING HARDWARE.
6. HORIZONTAL OR VERTICAL MOUNTING.

MANUFACTURERS:
TAYMAC MM720C,
LEVITON 5980–UCL
OR APPROVED EQUAL

1-GANG RECEPTACLE/LIGHT SWITCH COVER DETAIL

NOT TO SCALE

1. WEATHERPROOF WHILE IN USE SINGLE 2–GANG EXTRA DUTY FOR IN–USE PROTECTION.
2. DURABLE CLEAR POLYCARBONATE MATERIAL.
3. UL RATING.
4. LOCKABLE TAB.
5. ATTACHED GASKET MOUNTING HARDWARE.
6. VERTICAL MOUNTING.

MANUFACTURERS:
TAYMAC MM7420C,
LEVITON 5982–UCL
OR APPROVED EQUAL

2-GANG RECEPTACLE SWITCH COVER DETAIL

NOT TO SCALE

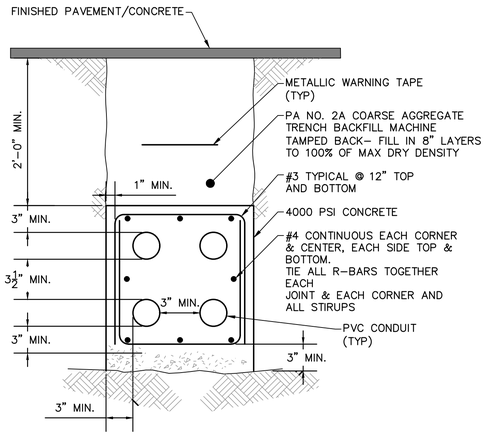

CONCRETE SHALL BE PER SPECIFICATION SECTION 03 30 00. ALL DUCTBANK SHALL BE CONCRETE ENCASED. THAT ARE INSTALLED UNDER ANY DRIVING OR PARKING AREAS AND SHALL EXTEND 3 FEET BEYOND THE LIMITS OF THE PARKING/DRIVING AREA.

DUCTBANK NOTES:

1. IF EXISTING OR NEW GROUNDS ARE NOT AVAILABLE AT DUCTBANK ENDS, PROVIDE ONE 3/4"x10' GROUND ROD, OFFSET TO SIDE OF DUCTBANK, FOR TERMINATION OF DUCTBANK GROUNDING CONDUCTORS.
2. SEE SPECIFICATIONS FOR ADDITIONAL DUCTBANK REQUIREMENTS.

CONCRETE DUCTBANK DETAIL

NOT TO SCALE

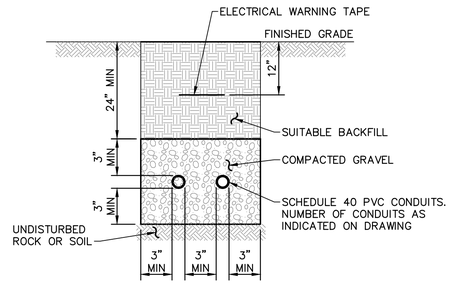

DRAWING NOTES:

1. ALL TRENCHING, BEDDING AND BACKFILLING BY THE ELECTRICAL CONTRACTOR.
2. ELECTRICAL CONDUIT AND CONDUCTORS SHALL BE INSTALLED BY THE ELECTRICAL CONTRACTOR.
3. KEEP 3" MINIMUM SEPERATION BETWEEN CONDUITS IN HORIZONTAL AND VERTICAL.
4. FOR TRENCH UNDER PARKING AREAS PROVIDE AGGREGATE BACKFILL.

DUCTBANK DETAIL IN UNPAVED AREAS

NOT TO SCALE

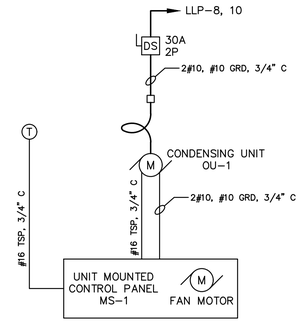

TYPICAL FOR:

EQUIPMENT	BRANCH CIRCUIT
OU/MS–1	RLLP–8, 10

SPLIT SYSTEM DUCTLESS HEAT PUMP UNITS CONDUIT RISER DIAGRAM

NOT TO SCALE

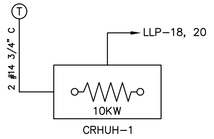

TYPICAL FOR:

EQUIPMENT	KW	BRANCH CIRCUIT
CRHUH–1	10	RLLP–18, 20

ELECTRIC HEATER DIAGRAM

NOT TO SCALE

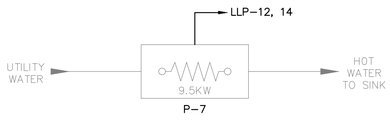

TYPICAL FOR:

EQUIPMENT	KW	BRANCH CIRCUIT
P–7	9.5	RLLP–12, 14

TANKLESS WATER HEATER DIAGRAM

NOT TO SCALE

1. NONMETALLIC LED LUMINAIRE, NOMINALLY 4–FEET LONG.
2. PENDANT OR CEILING MOUNTED.
3. FIBERGLASS HOUSING WITH NEOPRENE GASKET.
4. ACRYLIC PRISMATIC LENS WITH SIX STAINLESS STEEL LATCHES.
5. SUITABLE FOR WET OR CORROSIVE LOCATIONS.
6. LED MINIMUM 6,000 LUMEN OUTPUT, PCL, WD, 5000 KELVIN, MINIMUM 90 CRI.
7. RATED FOR 60,000 HOURS OF LIFE.
8. MULTI–VOLT BALLAST.
9. MINIMUM FIVE YEAR WARRANTY

MANUFACTURERS:
LITHONIA: VAP LED SERIES,
HUBBELL LXEN SERIES
OR APPROVED EQUAL

MOUNT 8'–0" ABOVE PUMP ROOM FINISHED FLOOR ELEVATION

INDICATES BATTERY BACKUP

LUMINAIRE 'BL' SPECIFICATION

NOT TO SCALE

1. EXIT SIGN.
2. TOP BACK OR END MOUNT.
3. IMPACT–RESISTANT, THERMOPLASTIC HOUSING.
4. SIX INCH LETTERS
5. SINGLE FACE (DOUBLE FACE AS INDICATED ON CONTRACT DRAWINGS –2)
6. UNIVERSAL CHEVRON ARROWS
7. RED LED FACE
8. DUAL VOLTAGE 120/277VOLT.
9. SELF CONTAINED EMERGENCY SEALED NICKEL–CADMIUM BATTERY BACKUP POWER TO PROVIDE A MINIMUM OF 90 MINUTES OF ILLUMINATION. SOLID STATE BATTERY CHARGING CIRCUIT WITH SELF DIAGNOSTIC AND TEST SWITCH.

MANUFACTURERS:
LITHONIA: LQM SERIES
McPHILBEN DAY–BRITE: CXX SERIES
OR APPROVED EQUAL

LUMINAIRE 'EX' SPECIFICATION

NOT TO SCALE

MOUNT 1'–0" BELOW SOFFIT

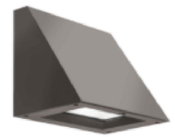

1. WALL MOUNTED AREA LED LUMINAIRE.
2. SINGLE PIECE DIE CAST ALUMINUM HOUSING WITH INTEGRATED HEAT SINK.
3. EXTERIOR PARTS ARE PROTECTED BY A ZINC–INFUSED SUPER DURABLE TGIC THERMOSET POWDER COAT FINISH.
4. VISUAL COMFORT FORWARD THROW OPTICS.
5. RATED FOR 100,000 HOURS OF LIFE.
6. MULTI–VOLT POWER.
7. FIVE YEAR WARRANTY.

MANUFACTURERS:
LITHONIA WDGE2 LED
OR APPROVED EQUAL

SL-1

1. CATALOG #: WDGE LED P2 40K 90 CRI VF
2. LUMENS: 1,790.
3. OPTIONS: E20WC, EMERGENCY BATTERY BACKUP, CERTIFIED IN CA TITLE 20 MAEDBS (18W, –20°C MIN)

SL-2

1. CATALOG #: WDGE LED P2 40K 90 CRI VW
2. LUMENS: 1,836.
3. OPTIONS: MOTION SENSOR

SL-3

1. CATALOG #: WDGE LED P2 40K 90 CRI VW
2. LUMENS: 1,836.
3. SWITCHED OPERATED.

LUMINAIRE 'SL' SPECIFICATION

NOT TO SCALE

NO.	REVISION	DATE	BY

COMMONWEALTH OF PENNSYLVANIA REGISTERED PROFESSIONAL MATTHEW DANIEL MOORE ENGINEER No. PE074005

HRG
Herbert, Rowland & Grubic, Inc.
Engineering & Related Services
AN EMPLOYEE-OWNED COMPANY
369 East Park Drive
Harrisburg, PA 17111
(717) 564-1121
Fax (717) 564-1158
hrg@hrg-inc.com
www.hrg-inc.com

HALIFAX AREA
WATER AND SEWER AUTHORITY
203 ARMSTRONG STREET
HALIFAX, PA 17032
(717) 896-8083

STANDARD DETAILS

FOR

HALIFAX TWP. SANITARY SEWER EXTENSION PROJECT

HALIFAX TOWNSHIP DAUPHIN COUNTY PENNSYLVANIA

PROJ. MGR. – JJM	
DESIGN– NMH	
CADD– DNC	
CHECKED–MDM	
SCALE– AS NOTED	
DATE– AUG. 2022	

DRAWING NO. E-15
SHEET NO. 108 OF 109
PROJECT 001650.0428

File name: \\hrgfsvr\Projects\2001\001650.0428\CAD\Plot Sets\SEC\001650428-P5.dwg Layout:E15 Sep 06, 2022 - 10:51am dsteland

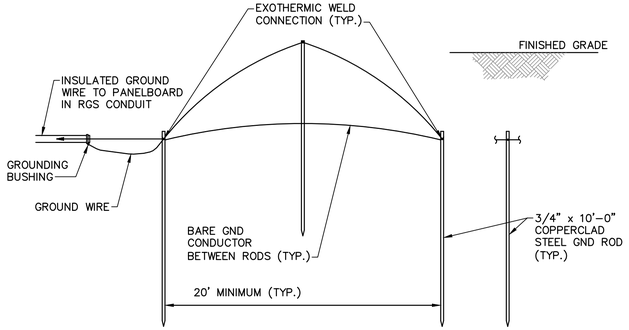

GROUNDING COUNTERPOISE DETAIL

NOT TO SCALE

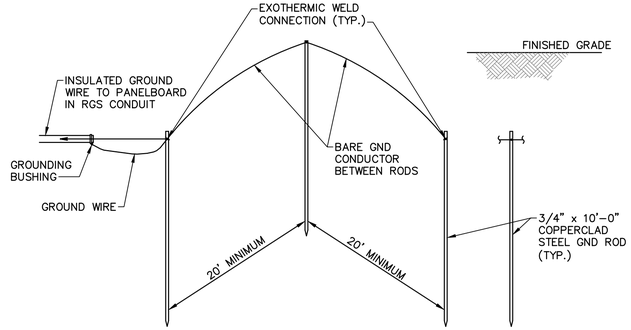

GROUNDING COUNTERPOISE DETAIL

NOT TO SCALE

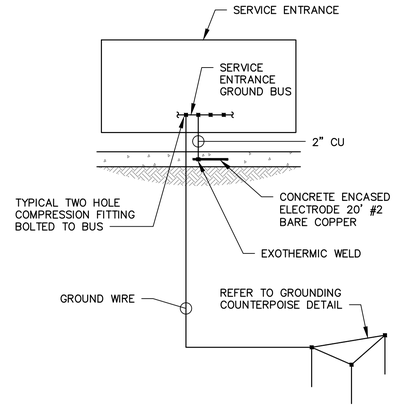

SERVICE ENTRANCE GROUNDING SCHEMATIC

NOT TO SCALE

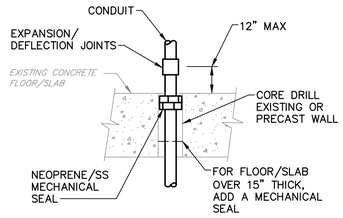

CONDUIT ENTRY INTO WELL

NOT TO SCALE

1. CLASS I DIVISION 1, EXPLOSION PROOF, 120–277V, 20 AMP SWITCH.
2. WET AND CORROSIVE ENVIRONMENT RATED.
3. COPPER FREE ALUMINUM AND HOUSING IS TRIPLE COATED MALLEABLE IRON.
4. TWO EXTERNAL LUGS PROVIDE A SIMPLE AND SECURE MOUNTING OF THE UNIT TO WALLS AND FLAT SURFACES.
5. 1/2" HUB OPENINGS LOCATED AT THE TOP AND BOTTOM OF THE HOUSING FOR RUNNING ELECTRICAL CONDUCTORS IN A FEED THROUGH CONFIGURATION.
6. A BUSHING SEAL AT EACH CONDUCTOR OPENING PREVENTS DAMAGE TO WIRING INSTALLATION.

MANUFACTURERS:
LARSON ELECTRONICS: MODEL # EPS–25A,
KILLARK XS21C
OR APPROVED EQUAL

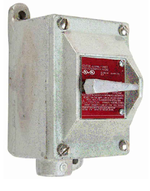

'SXP' EXPLOSION PROOF SWITCH

NOT TO SCALE

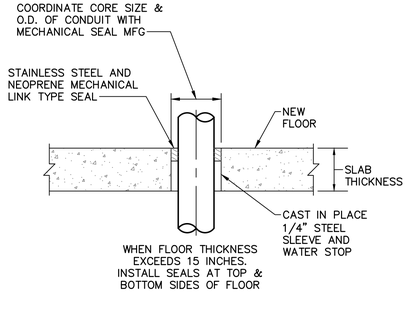

CONDUIT PENETRATION THRU CONCRETE FLOOR

NOT TO SCALE

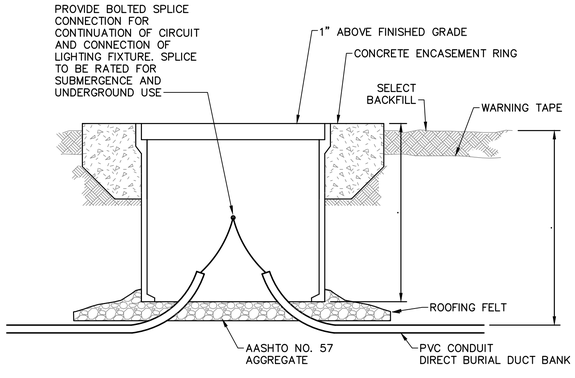

NOTES:

1. THE WARNING TAPE SHALL BE LOCATED 6" BELOW GRADE.
2. AN AASHTO NO. 57 AGGREGATE DRAINAGE BED IS REQUIRED UNDER ALL ELECTRICAL HANDHOLES. THE DRAINAGE BED SHALL BE EQUAL TO THE HANDHOLE BASE DIMENSIONS PLUS 12" DEPTH.
3. THE ENCASEMENT RING AND HANDHOLE SHALL BE 1" ABOVE FINISHED GRADE.
4. THE HANDHOLE COVER SHALL BE GRAY IN COLOR AND EMBOSSED WITH "ELECTRIC" OR "COMMUNICATIONS". THE COVER SHALL BE HEAVY DUTY TYPE WITH A DESIGN LOAD EQUAL OR EXCEEDING 15,000 LBS. OVER A 10" SQUARE.
5. QUAZITE# PC1212BA12 (12"W x 12"L x 12"D) OR APPROVED EQUAL.

ELECTRICAL SPLICE HANDHOLE DETAIL

NOT TO SCALE

NO.	REVISION	DATE	BY

COMMONWEALTH OF PENNSYLVANIA REGISTERED PROFESSIONAL ENGINEER MATTHEW DANIEL MOORE No. PE74355 9/1/22

HRG
Herbert, Rowland & Grubic, Inc.
Engineering & Related Services
AN EMPLOYEE-OWNED COMPANY
369 East Park Drive
Harrisburg, PA 17111
(717) 564-1121
Fax (717) 564-1158
hrg@hrg-inc.com
www.hrg-inc.com

HALIFAX AREA
WATER AND SEWER AUTHORITY
203 ARMSTRONG STREET
HALIFAX, PA 17032
(717) 896-8083

STANDARD DETAILS

FOR

HALIFAX TWP. SANITARY SEWER EXTENSION PROJECT

HALIFAX TOWNSHIP DAUPHIN COUNTY PENNSYLVANIA

PROJ. MGR. –	JJM
DESIGN–	NMH
CADD–	DNC
CHECKED–	MDM
SCALE–	AS NOTED
DATE–	AUG. 2022

DRAWING NO.
E-16
SHEET NO.
109 OF 109
PROJECT 001650.0428

File name: \\hrgbow\Projects\Projects\2016\001650_HALIFAX\CAD\Plan Sets\E01E16001650428-PS.dwg Layout: E16 Sep 01, 2022 - 2:59pm dsteland